P/N	APPLICABLE NOTE(S)	SMP INTERFACE(S)	(Ø A)
-1CCSF	1,2,3	LIMITED DETENT	(.120)
-2CCSF	1,2,3	SMOOTH BORE	(.125)
-3CCSF	1,2,3	FULL DETENT	(.116)

REVISIONS

ZONE	REV	DESCRIPTION	DATE	BY
-	B	ECO 11671	05/22/00	IMG
-	C	ECO 12027	07.28.00	DKN
-	D	ECO 12057	08.02.00	DKN

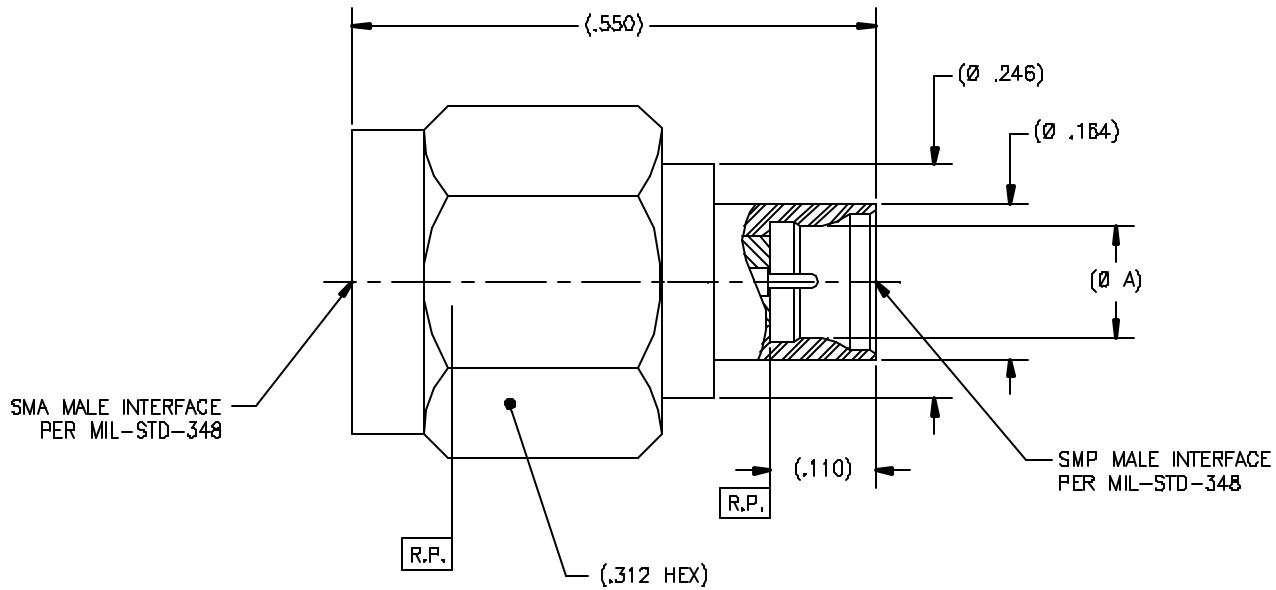

DRAWING NO. P906 REV. D

NOTE(S):

1. MATERIAL(S):
   1.1 BODY & NUT: 303 SST PER ASTM A-582
   1.2 CONTACT & RETAINING RING: BeCu ALLOY PER ASTM B-196
   1.3 GASKET: SILICON RUBBER PER ZZ-R-765
   1.4 INSULATOR: PTFE PER ASTM D-1710
2. FINISH:(ES)
   2.1 BODY & NUT: PASSIVATE PER ASTM A-967
   2.2. CONTACT: GOLD PLATE PER ASTM B-488 OVER NICKEL PLATE PER QQ-N-290
   2.3 GASKET, RETAINING RING & INSULATOR: NONE
3. ELECTRICAL PERFORMANCE(S):
   3.1 FREQUENCY RANGE: DC-18GHz
   3.2 VSWR: 1.15 : 1 Max to 18GHz
   3.3 INSERTION LOSS: 0.25dB Max to 18GHz

NOTICE
THIS DRAWING EMBODIES A CONFIDENTIAL, PROPRIETARY DESIGN DEVELOPED BY TENSOLITE COMPANY AND ALL DESIGN, MANUFACTURING REPRODUCTION, USE AND SALE RIGHTS REGARDING THE SAME ARE EXPRESSLY RESERVED. IT IS SUBMITTED UNDER A CONFIDENTIAL RELATIONSHIP FOR A SPECIFIED PURPOSE AND THE RECIPIENT AGREES BY ACCEPTING THIS DRAWING FOR ITS SUPPLY OR DISCLOSURE AND INFORMATION REGARDING IT TO ANY UNAUTHORIZED PERSON OR TO INCORPORATE IN OTHER PROJECTS ANY SPECIAL FEATURES PECULIAR TO THIS DESIGN. ALL PATENT RIGHTS HEREIN ARE EXPRESSLY RESERVED BY TENSOLITE COMPANY, LONG BEACH, CALIFORNIA 90815

TOLERANCES AND NOTES
EXCEPT AS NOTED
DIMENSIONS ARE IN INCHES
LINEAR .XX ±.010 .XXX ±.005 ANGULAR ± 1/2°
FRACTION ± 1/32
1. MACHINE FINISH 63 RMS
2. BREAK ALL SHARP EDGES .003 MAX.
3. MACHINED FILLETS .005 MAX.
4. MACHINED SURFACES SQUARE TO RESPECTIVE AXIS WITHIN .005 INCHES PER INCH.
5. MACHINED DIAMETERS CONCENTRIC WITHIN .001 T.I.R.
6. DIMENSIONS TO BE MET BEFORE PLATING.
7. CHAM FER ALL THREADS 45°.
8. THREADS PER H-28.
9. REMOVE FRAYED EDGES ON TEFLON.
10. REMOVE ALL BURRS.

SEE NOTES	-	SEE NOTES	-
MATERIAL	SIZE	SPECIFICATION	PROCUREMENT

NEXT ASSY

APPROVAL INITIALS		DATE
DRAWN BY	BRD	02/19/96
CHECKED		
QUALITY		
ENGINEERING	ATV	08.03.00

Tensolite RF/Microwave Connectors
Long Beach, California 90815

TITLE SMP MALE STRAIGHT TO SMA MALE ADAPTER

SCALE 10/1 SUB-DIRECTORY/FILENAME _OLPXX\OLP906 SHEET 1 OF 1

SIZE C CODE 30990 DRAWING NO. P906 REV. D