P/N	APP. NOTES	(Ø A)	SMP INTERFACE
-1CCSF	1,2,3	.120	LIMITED DETENT
-2CCSF	1,2,3	.125	SMOOTH BORE
-3CCSF	1,2,3	.116	FULL DETENT

REVISIONS

ZONE	REV	DESCRIPTION	DATE	BY
-	B	ECO 11193	01.31.00	E.A.
-	C	ECO 11853	05.22.00	DKN
-	D	ECO 12572	11/20/00	IMG

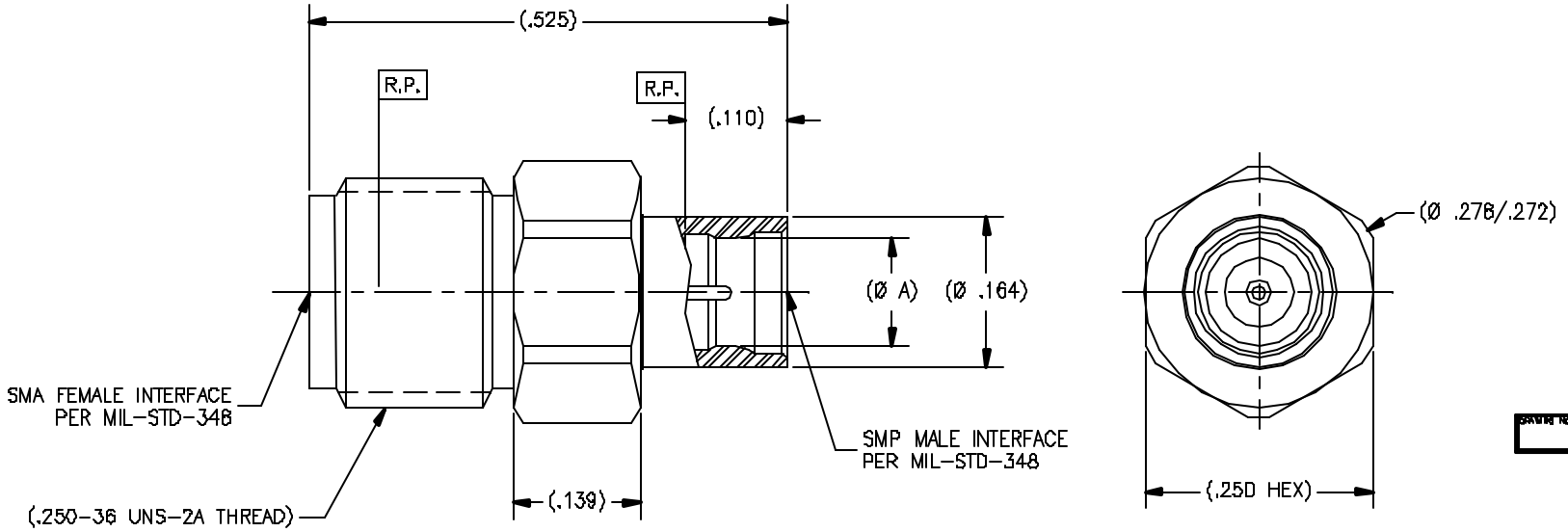

DRAWING NO. P910 REV. D

NOTE(S):

1. MATERIAL(S):
   1.1 BODY: 303 SST PER ASTM A-582.
   1.2 CENTER CONDUCTOR: BeCu ALLOY PER ASTM B-196
   1.3 INSULATOR: TEFLON PER ASTM D-1710
2. FINISH(ES):
   2.1 BODY: PASSIVATED PER ASTM A-967
   2.2 CENTER CONDUCTOR: GOLD PLATED PER ASTM B-488 OVER NICKEL UNDERPLATE PER AMS-QQ-N-290.
   2.3 INSULATOR: NONE.
3. ELECTRICAL PERFORMANCE:
   3.1 FREQUENCY RANGE: DC-18GHz
   3.2 R.F. INSERTION LOSS: 0.25dB Max to 18GHz
   3.3 VSWR: 1.15:1 Max to 18GHz

NOTICE

THIS DRAWING EMBODIES A CONFIDENTIAL, PROPRIETARY DESIGN ORIGINATED BY TENSOLITE COMPANY AND ALL DESIGN, MANUFACTURING REPRODUCTION, USE AND SALE RIGHTS REGARDING THE SAME ARE EXPRESSLY RESERVED. IT IS SUBMITTED UNDER A CONFIDENTIAL RELATIONSHIP FOR A SPECIFIED PURPOSE AND THE RECIPIENT AGREES BY ACCEPTING THIS DRAWING NOT TO SUPPLY OR DISCLOSE ANY INFORMATION REGARDING IT TO ANY UNAUTHORIZED PERSON OR TO INCORPORATE IN OTHER PROJECTS ANY SPECIAL FEATURES POPULAR TO THIS DESIGN. ALL PATENT RIGHTS HEREIN ARE EXPRESSLY RESERVED BY TENSOLITE COMPANY, LONG BEACH, CALIFORNIA 90815

TOLERANCES AND NOTES EXCEPT AS NOTED

DIMENSIONS ARE IN INCHES
LINEAR .XX ±.010 .XXX ±.005 ANGULAR ± 1/2°
FRACTION ± 1/32

1. MACHINE FINISH 63 RMS
2. BREAK ALL SHARP EDGES .003 MAX.
3. MACHINED FILLETS .005 MAX.
4. MACHINED SURFACES SQUARE TO RESPECTIVE AXIS WITHIN .005 INCHES PER INCH.
5. MACHINED DIAMETERS CONCENTRIC WITHIN .002 T.I.R.
6. DIMENSIONS TO BE MET BEFORE PLATING.
7. CHAMFER ALL THREADS 45°.
8. THREADS PER H-28.
9. REMOVE FRAYED EDGES ON TEFLON.
10. REMOVE ALL BURRS.

-	-	-	-
MATERIAL	SIZE	SPECIFICATION	PROCUREMENT

NEXT ASSY

APPROVAL INITIALS		DATE
DRAWN BY	BRD	02/29/96
CHECKED		
QUALITY		
ENGINEERING	ATV	11.20.00

Tensolite RF/Microwave Connectors
Long Beach, California 90815

TITLE: SMP MALE STRAIGHT TO SMA FEMALE ADAPTER

SCALE 4/1 | SUB-DIRECTORY/FILENAME _OLPXX\OLP910 | SHEET 1 OF 1

SIZE C | CODE 30990 | DRAWING NO. P910 | REV. D