| P/N | APPLICABLE NOTES | (Ø A) | INTERFACE |
|---|---|---|---|
| -1CCSF | 1,2,3 | .116 | FULL DETENT |
| -2CCSF | 1,2,3 | .120 | LIMITED DETENT |
| -3CCSF | 1,2,3 | .125 | SMOOTH BORE |
| | | | |
| | | | |

REVISIONS

| ZONE | REV | DESCRIPTION | DATE | BY |
|---|---|---|---|---|
| - | A | ECO 8413 | 03/18/98 | JLA |
| - | B | ECO 11686 | 05/23/00 | IMG |
| - | C | ECO 12053 | 08.02.00 | DKN |

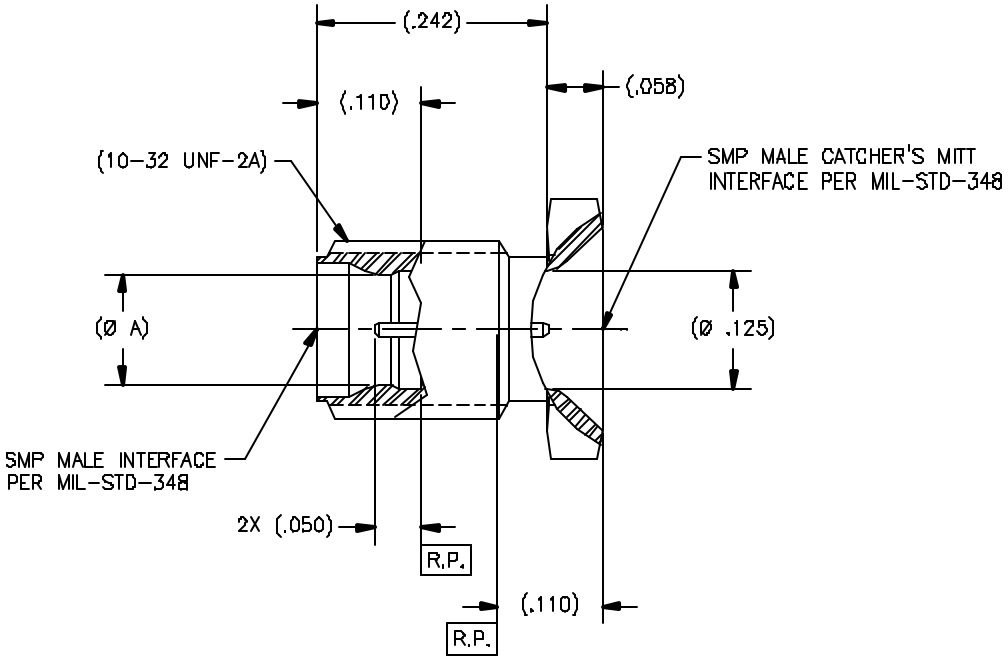


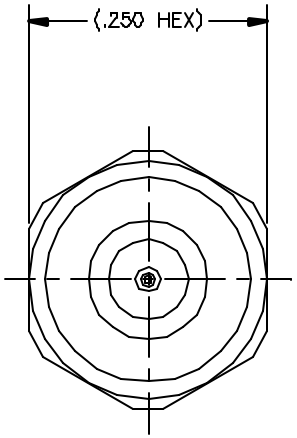


DRAWING NO. P912 REV. C

NOTE(S):

1. MATERIAL:
   1.1 BODY: 303 SST PER ASTM A-582
   1.2 CONTACT: BeCu ALLOY PER ASTM B-196 OR B-197
   1.3 INSULATOR: PTFE PER ASTM D-1710

2. FINISH:
   2.1 BODY: PASSIVATE PER ASTM A-967
   2.2 CONTACT: GOLD PLATE PER ASTM A-967
   NICKEL PLATE PER QQ-N-290
   2.3 INSULATOR: NONE

3. ELECTRICAL PERFORMANCE:
   3.1 FREQUENCY RANGE: DC-18GHz
   3.2 R.F. INSERTION LOSS: 0.25dB Max to 18GHz
   3.3 VSWR: 1.15:1 Max to 18GHz

NOTICE
THIS DRAWING EMBODIES A CONFIDENTIAL, PROPRIETARY DESIGN ORIGINATED BY TENSOLITE COMPANY AND ALL DESIGN, MANUFACTURING REPRODUCTION, USE AND SALE RIGHTS REGARDING THE SAME ARE EXPRESSLY RESERVED. IT IS SUBMITTED UNDER A CONFIDENTIAL RELATIONSHIP FOR A SPECIFIED PURPOSE AND THE RECIPIENT AGREES BY ACCEPTING THIS DRAWING NOT TO SUPPLY OR DISCLOSE ANY INFORMATION REGARDING IT TO ANY UNAUTHORIZED PERSON OR TO INCORPORATE IN OTHER PROJECTS ANY SPECIAL FEATURES POPULAR TO THIS DESIGN. ALL PATENT RIGHTS HEREIN ARE EXPRESSLY RESERVED BY TENSOLITE COMPANY, LONG BEACH, CALIFORNIA 90815

TOLERANCES AND NOTES
EXCEPT AS NOTED
DIMENSIONS ARE IN INCHES
LINEAR .XX ±.010 .XXX ±.005 ANGULAR ± 1/2°
FRACTION ± 1/32
1. MACHINE FINISH 63 RMS
2. BREAK ALL SHARP EDGES .003 MAX.
3. MACHINED FILLETS .005 MAX.
4. MACHINED SURFACES SQUARE TO RESPECTIVE AXIS WITHIN .005 INCHES PER INCH.
5. MACHINED DIAMETERS CONCENTRIC WITHIN .001 T.I.R.
6. DIMENSIONS TO BE MET BEFORE PLATING.
7. CHAM FOR ALL THREADS 45°.
8. THREADS PER H-28.
9. REMOVE FRAYED EDGES ON TEFLON.
10. REMOVE ALL BURRS.

| MATERIAL | SIZE | SPECIFICATION | PROCUREMENT |
|---|---|---|---|
| - | - | - | - |

NEXT ASSY

| APPROVAL INITIALS | | DATE |
|---|---|---|
| DRAWN BY | BRD | 05/23/95 |
| CHECKED | | |
| QUALITY | | |
| ENGINEERING | ATV | 08.03.00 |

Tensolite RF/Microwave Connectors
Long Beach, California 90815

TITLE SMP MALE BULKHEAD STRAIGHT TO SMP MALE CATCHERS MITT ADAPTER

SCALE 10/1 SUB-DIRECTORY/FILENAME _OLPXX\OLP912 SHEET 1 OF 1

SIZE C CODE IDENT 30990 DRAWING NO. P912 REV. C