P/N	APPLICABLE NOTE(S)
-1CC	1,2

REVISIONS				
ZONE	REV	DESCRIPTION	DATE	BY
–	–	–	–	–

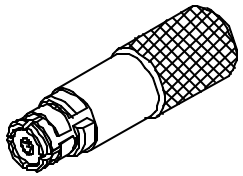

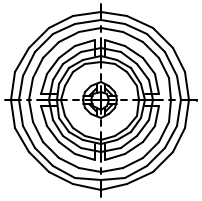

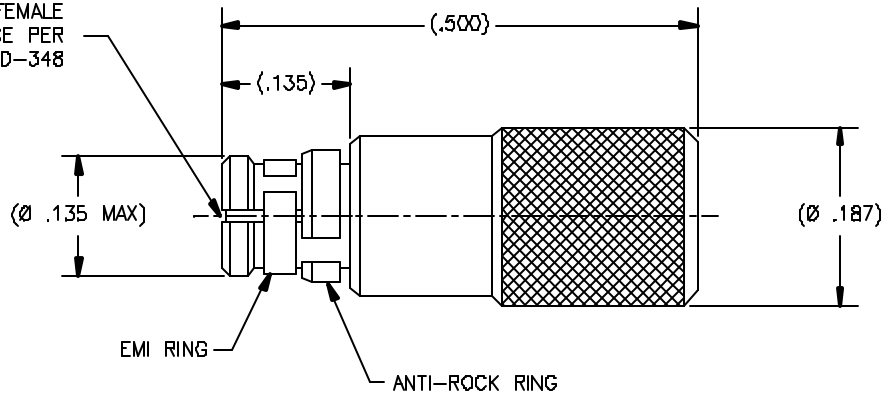

DRAWING NO.	REV.
P930	–

NOTE(S):

1. MATERIAL(S):
   - 1.1 BODY, CONTACT, EMI AND ANTI-ROCK RINGS: BeCu ALLOY C173 PER ASTM B-196
   - 1.2 INSULATOR: PTFE PER ASTM D-1710

2. FINISH(ES):
   - 2.1 BODY, CONTACT, EMI AND ANTI-ROCK RINGS: GOLD PLATE PER ASTM B-488 OVER NICKEL PLATE PER AMS-QQ-N-290
   - 2.2 INSULATOR: NONE

NOTICE

THIS DRAWING EMBODIES A CONFIDENTIAL, PROPRIETARY DESIGN ORIGINATED BY TENSOLITE COMPANY AND ALL DESIGN, MANUFACTURING REPRODUCTION, USE AND SALE RIGHTS REGARDING THE SAME ARE EXPRESSLY RESERVED. IT IS SUBMITTED UNDER A CONFIDENTIAL RELATIONSHIP FOR A SPECIFIED PURPOSE AND THE RECIPIENT AGREES BY ACCEPTING THIS DRAWING FOR ITS SUPPLY OR DISCLOSURE AND INFORMATION REGARDING IT TO ANY UNAUTHORIZED PERSON OR TO INCORPORATE IN OTHER PRODUCTS ANY SPECIAL FEATURES POPULAR TO THIS DESIGN. ALL PATENT RIGHTS HEREIN ARE EXPRESSLY RESERVED BY TENSOLITE COMPANY, LONG BEACH, CALIFORNIA 90815

TOLERANCES AND NOTES EXCEPT AS NOTED

DIMENSIONS ARE IN INCHES.
LINEAR .XX ± .010 .XXX ± .005 ANGULAR ± 1/2°
FRACTION ± 1/64

1. MARKING FINISH 63 RMS
2. BREAK ALL SHARP EDGES .003 MAX.
3. MACHINED FILLETS .005 MAX.
4. MACHINED SURFACES SQUARE TO REFERENCE AXIS WITHIN .005 INCHES PER INCH.
5. MACHINED DIAMETERS CONCENTRIC WITHIN .002 T.I.R.
6. DIMENSIONS TO BE MET BEFORE PLATING.
7. DRAFT FOR ALL TURNED 10°.
8. THREADS PER H-28.
9. REMOVE FRAYED EDGES ON TEFLON.
10. REMOVE ALL BURRS.

SEE NOTES	–	SEE NOTES	SEE NOTES
MATERIAL	SIZE	SPECIFICATION	PROCUREMENT

NEXT ASSY

APPROVAL	INITIALS	DATE
DRAWN BY	ATV	06.29.01
CHECKED		
QUALITY		
ENGINEERING	JD	06.29.01

Tensolite RF/Microwave Connectors
Long Beach, California 90815

TITLE: SMP FEMALE SHORT

SCALE: 10/1 | SUB-DIRECTORY/FILENAME: OLPXXX\OLP930 | SHEET 1 OF 1

SIZE: C | CODE IDENT: 30990 | DRAWING NO.: P930 | REV.: –