P/N	APPLICABLE NOTE(S)	(Ø A)	(B)	CABLE TYPE(S)
−1	1,2,3,4	.185	.555	Ø .141
−1CC	1,2,3,4	.185	.555	Ø .141
−1CCSF	1,2,3,4	.185	.555	Ø .141
−1SF	1,2,3,4	.185	.555	Ø .141
−2	1,2,3,4	.125	.500	Ø .085
−2CC	1,2,3,4	.125	.500	Ø .085
−2CCSF	1,2,3,4	.125	.500	Ø .085
−2SF	1,2,3,4	.125	.500	Ø .085
−3	1,2,3,4	.185	.555	Ø .141 MICROPOROUS
−3SF	1,2,3,4	.185	.555	Ø .141 MICROPOROUS
−5CC	1,2,3,4	.095	.440	Ø .047
−5CCSF	1,2,3,4	.095	.440	Ø .047

REVISIONS				
ZONE	REV	DESCRIPTION	DATE	BY
–	A	ECO 17390	09.01.04	JF
–	B	ECO 20183	04.24.07	DKN

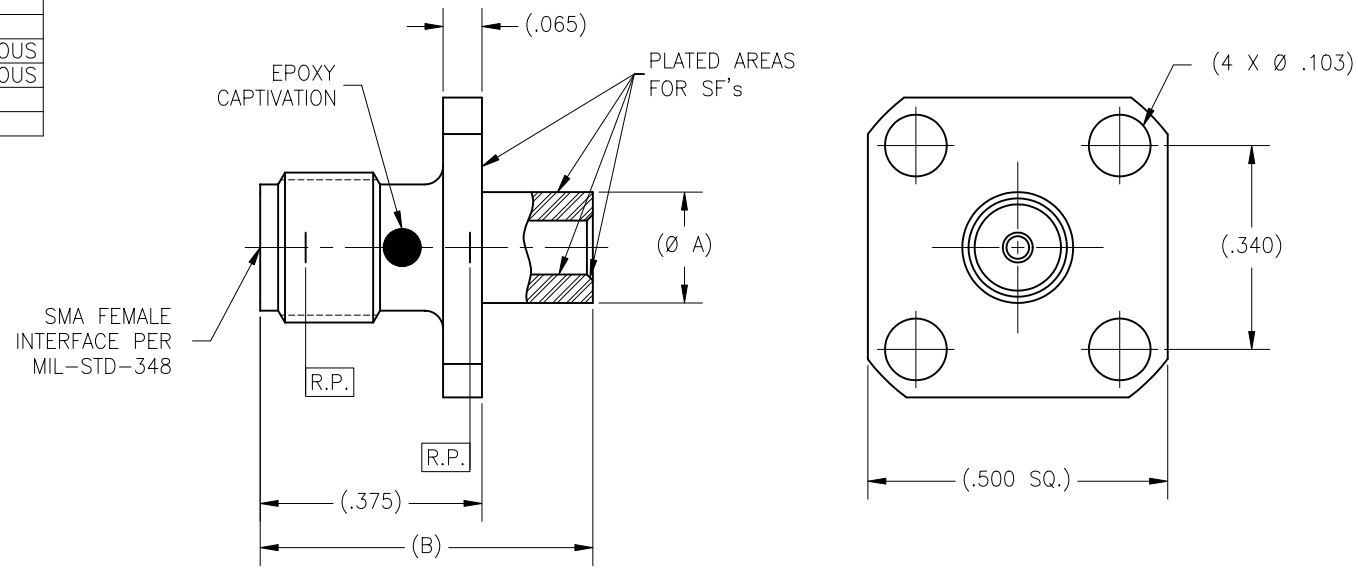

NOTE(S):

1. FOR −1CC & −1CCSF: ALL COMPONENTS ARE ASSEMBLED.
2. FOR OTHER'S: ALL COMPONENTS ARE PACKAGED & SHIPPED UNASSEMBLED.

DRAWING NO.	REV.
5228	B

MATERIAL:

Body:
303 sst per ASTM A−582.
Center Conductor:
BeCu alloy per ASTM B−196.
Insulator:
PTFE per ASTM D−1710.
Dielectric Stop: (for −5CC & −5CCSF)
Peek.
Epoxy:(for −2CC, −2CCSF, −5CC & −5CCSF)
Sigma VF type HV (Not supply).

ELECTRICAL:

Impedance: 50 Ohms nominal.
Freqancy Range: DC to 18.0 GHz.
VSWR: 1.05 + .003 X f(GHz).
Insertion Loss: .03 $\sqrt{f}$ (GHz).
Working Voltage: 335 Vrms max @ sea level.
Dielectric Withstanding Voltage: 1000 Vrms min.
R.F. HiPot Voltage: 670 Vrms min @ 5MHz.
Corona Level: 250 Vrms @ 70,000 ft.
Insulation Resistance: 5000 MegOhms min.
R.F. Leakage: −(60 − fGHz) − with epoxy
−(90 − fGHz) − no epoxy
Contact Resistance:
Initial:
Center Contact: 3.0 Milliohm max.
Outer Contact: 2.0 Milliohm max.
After Environment:
Center Contact: 4.0 Milliohm max.

MECHANICAL:

Mating Characteristics:
Interface per Mil−Std−348.
Force To Engage & Disengage:
Torque: 2 inch−pounds max.
Longitudinal Force: NA.
Center Contact Retention:
Axial Force: 6 pounds min.
Connector Durability:
500 cycles min @ 12 cycles/minute max.
Permeability: Less than 2.0 mu.
Center Contact Captivation:
Axial Force: 6 pounds min.
(one direction only for −1CC & −1CCSF)
Radial Torque: 4 inch−ounces min.
(except −1CC & −1CCSF)

ENVIRONMENTAL:

Temperature Range: −65° to +165°.
Thermal Shock:
Mil−Std−202, Method 107, Test Cond. B.
Moisture Resistance:
Mil−Std−202, Method 106, No measurements at high humidity. Insulation resistance shall be at least 200 MegOhms within 5 minutes after removal from humidity.
Corrosion:
Mil−Std−202, Method 101, Test Cond. B.
Vibration:
Mil−Std−202, Method 204, Test Cond. D.
Shock:
Mil−Std−202, Method 213, Test Cond. I.

FINISH:

Body:
(for SF's): Passivate per ASTM A−967, except areas noted.
(for Basic & CC): Gold plate per ASTM B−488, over nickel under plate per AMS−QQ−N−290.
Center Conductor:
Gold plate per ASTM B−488, over nickel under plate per AMS−QQ−N−290.

APPLICABLE TENSOLITE DOCUMENTS

WORK STD	PROD INST	ASSY INST
NA	NA	NA

NOTICE

THIS DRAWING EMBODIES A CONFIDENTIAL PROPRIETARY DESIGN ORIGINATED BY TENSOLITE COMPANY AND ALL DESIGN, MANUFACTURING REPRODUCTION, USE AND SALE RIGHTS REGARDING THE SAME ARE EXPRESSLY RESERVED. IT IS SUBMITTED UNDER A CONFIDENTIAL RELATIONSHIP FOR A SPECIFIED PURPOSE AND THE RECIPIENT AGREES BY ACCEPTING THIS DRAWING NOT TO SUPPLY OR DISCLOSE ANY INFORMATION REGARDING IT TO ANY UNAUTHORIZED PERSON TO INCORPORATE IN OTHER PROJECTS ANY SPECIAL FEATURES PECULIAR TO THIS DESIGN. ALL PATENT RIGHTS HERETO ARE EXPRESSLY RESERVED BY TENSOLITE COMPANY, LONG BEACH, CALIFORNIA 90815.

TOLERANCES AND NOTES EXCEPT AS NOTED

DIMENSIONS ARE IN INCHES.
LINEAR .XX ±.015 .XXX ±.005 ANGULAR ± 1/2°
FRACTION ± 1/32

1. MACHINE FINISH: 63 RMS
2. BREAK ALL SHARP EDGES .003 MAX.
3. MACHINED FILLETS .005 MAX.
4. MACHINED SURFACES SQUARE TO RESPECTIVE AXIS WITHIN .005 INCHES PER INCH.
5. MACHINED DIAMETERS CONCENTRIC WITHIN .002 T.I.R.
6. DIMENSIONS TO BE MET BEFORE PLATING.
7. CHAMFER ALL THREADS 45°.
8. THREADS PER H−28
9. REMOVE FRAYED EDGES ON TEFLON.
10. REMOVE ALL BURRS.

–	–	–	–
MATERIAL	SIZE	SPECIFICATION	PROCUREMENT

APPROVAL INITIALS		DATE
DRAWN BY	IMG	03.13.02
CHECKED BY		
TEST ENGG		
QUALITY		
DESIGN ENGG	ATV	04.24.07
MFG ENGG		

Tensolite
HIGH PERFORMANCE CABLES & INTERCONNECT SYSTEMS
Long Beach, California 90815

TITLE: SMA FEMALE 4 HOLE FLANGE MOUNT TO SEMI−RIGID CABLE

SCALE	SUB−DIRECTORY\FILENAME	SHEET
8:1	OL_\	1 OF 1

SIZE	CAGE CODE	DRAWING NO.	REV.
C	30990	5228	B