P/N	APPLICABLE NOTE(S)	CABLE TYPE(S)
−1	1,2	Ø .141 S/R
−1CC	1,2	Ø .141 S/R
−1CCSF	1,2	Ø .141 S/R
−1SF	1,2	Ø .141 S/R

REVISIONS				
ZONE	REV	DESCRIPTION	DATE	BY
–	J	ECO 16380	12/03/03	LN

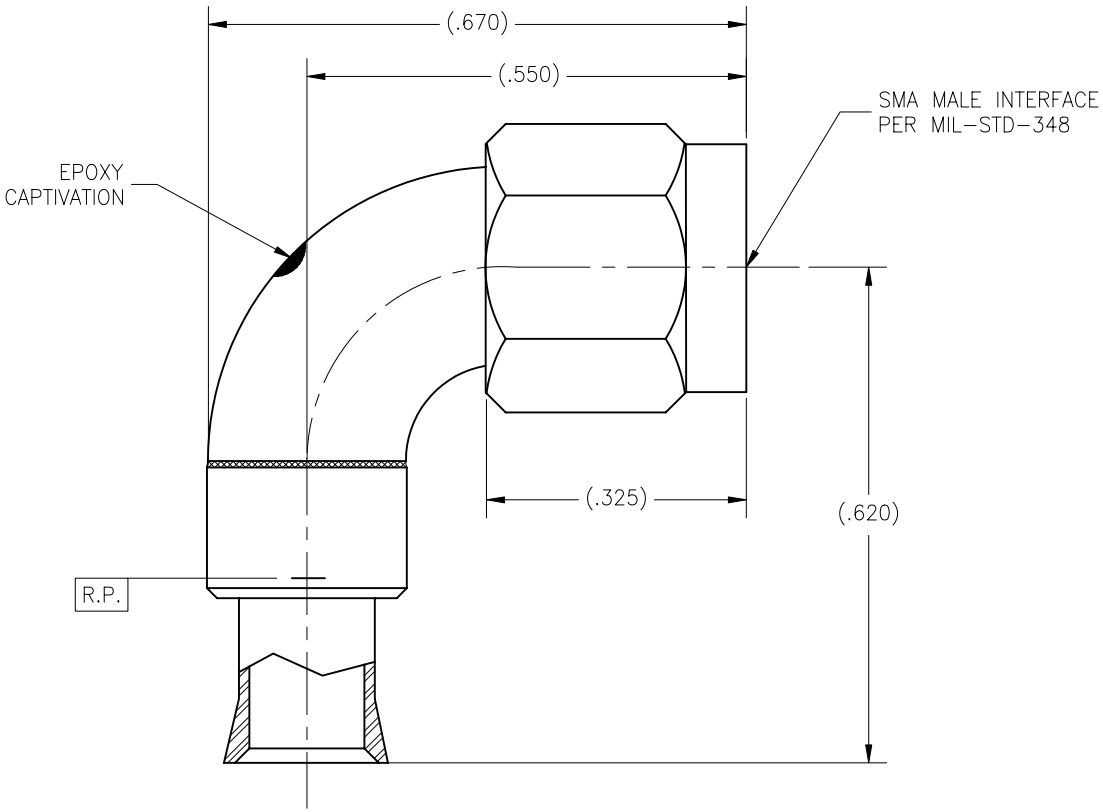

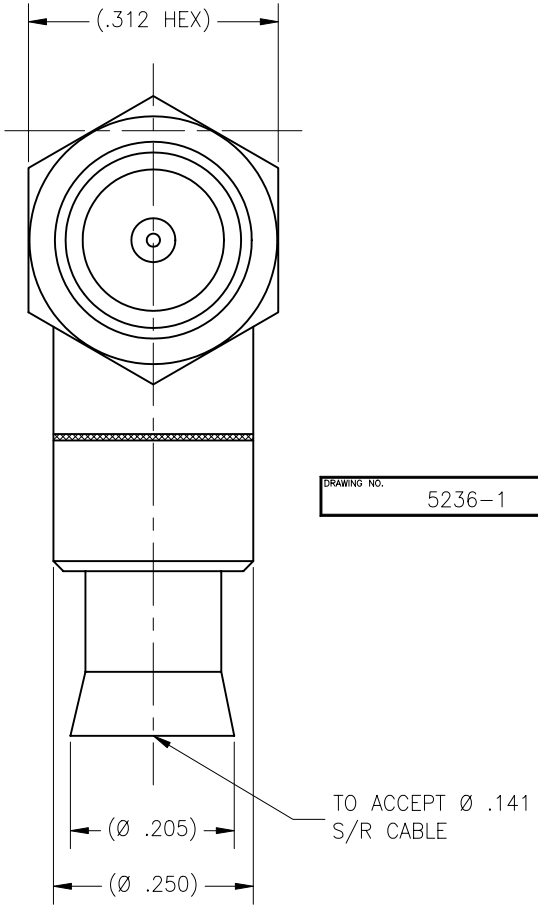

DRAWING NO.	REV.
5236−1	J

NOTE(S):

1. MATERIAL(S):
   - 1.1 COUPLING NUT: 303 SST PER ASTM A−582
   - 1.2 BODY SUB−ASSEMBLY: 303 SST PER ASTM A−582 & 304 SST PER AMS 5370
   - 1.3 CONTACT & RETAINING RING: BeCu ALLOY PER ASTM B−196 (or B−197)
   - 1.4 GASKET: SILICONE RUBBER PER ZZ−R−765
   - 1.5 INSULATOR: PTFE PER ASTM D−1710
2. FINISH(ES):
   - 2.1 COUPLING NUT: (FOR SF & CCSF) PASSIVATED PER ASTM A−967
     (FOR BASIC & CC) GOLD PLATE PER ASTM B−488 OVER NICKEL PLATE PER AMS−QQ−N−290
   - 2.2 BODY SUB−ASSEMBLY & CONTACT: GOLD PLATE PER ASTM B−488 OVER NICKEL PLATE PER AMS−QQ−N−290
   - 2.3 RETAINING RING, GASKET & INSULATOR: NONE

APPLICABLE TENSOLITE DOCUMENTS

WORK STD	PROD INST	ASSY INST
NA	NA	NA

NOTICE

THIS DRAWING EMBODIES A CONFIDENTIAL PROPRIETARY DESIGN ORIGINATED BY TENSOLITE COMPANY AND ALL DESIGN, MANUFACTURING REPRODUCTION, USE AND SALE RIGHTS REGARDING THE SAME ARE EXPRESSLY RESERVED. IT IS SUBMITTED UNDER A CONFIDENTIAL RELATIONSHIP FOR A SPECIFIED PURPOSE AND THE RECIPIENT AGREES BY ACCEPTING THIS DRAWING NOT TO SUPPLY OR DISCLOSE ANY INFORMATION REGARDING IT TO ANY UNAUTHORIZED PERSON TO INCORPORATE IN OTHER PROJECTS ANY SPECIAL FEATURES PECULIAR TO THIS DESIGN. ALL PATENT RIGHTS HERETO ARE EXPRESSLY RESERVED BY TENSOLITE COMPANY, LONG BEACH, CALIFORNIA 90815.

TOLERANCES AND NOTES EXCEPT AS NOTED

DIMENSIONS ARE IN INCHES.
LINEAR .XX ±.015 .XXX ±.005 ANGULAR ± 1/2°
FRACTION ± 1/32

1. MACHINE FINISH: 63 √ RMS
2. BREAK ALL SHARP EDGES .003 MAX.
3. MACHINED FILLETS .005 MAX.
4. MACHINED SURFACES SQUARE TO RESPECTIVE AXIS WITHIN .005 INCHES PER INCH.
5. MACHINED DIAMETERS CONCENTRIC WITHIN .002 T.I.R.
6. DIMENSIONS TO BE MET BEFORE PLATING.
7. CHAMFER ALL THREADS 45°.
8. THREADS PER H−28
9. REMOVE FRAYED EDGES ON TEFLON.
10. REMOVE ALL BURRS.

SEE NOTES	–	SEE NOTES	–
MATERIAL	SIZE	SPECIFICATION	PROCUREMENT

NEXT ASSY

APPROVAL INITIALS		DATE
DRAWN BY	RC	09/10/69
CHECKED	SLM	12/03/03
QUALITY		
ENGINEERING	DNg	12/04/03

Tensolite
HIGH PERFORMANCE CABLES & INTERCONNECT SYSTEMS
Long Beach, California 90815

TITLE: SMA MALE RADIUS R/A TO Ø .141 S/R CABLE

SCALE 8:1 | SUB−DIRECTORY\FILENAME _OL\OL_5236−1 | SHEET 1 OF 1

SIZE C | CAGE CODE 30990 | DRAWING NO. 5236−1 | REV. J