P/N	APPLICABLE NOTE(S)
CC	1
CCSF	1

REVISIONS				
ZONE	REV.	DESCRIPTION(S)	DATE	BY
–	A	ECO 19698	10.25.06	DKN

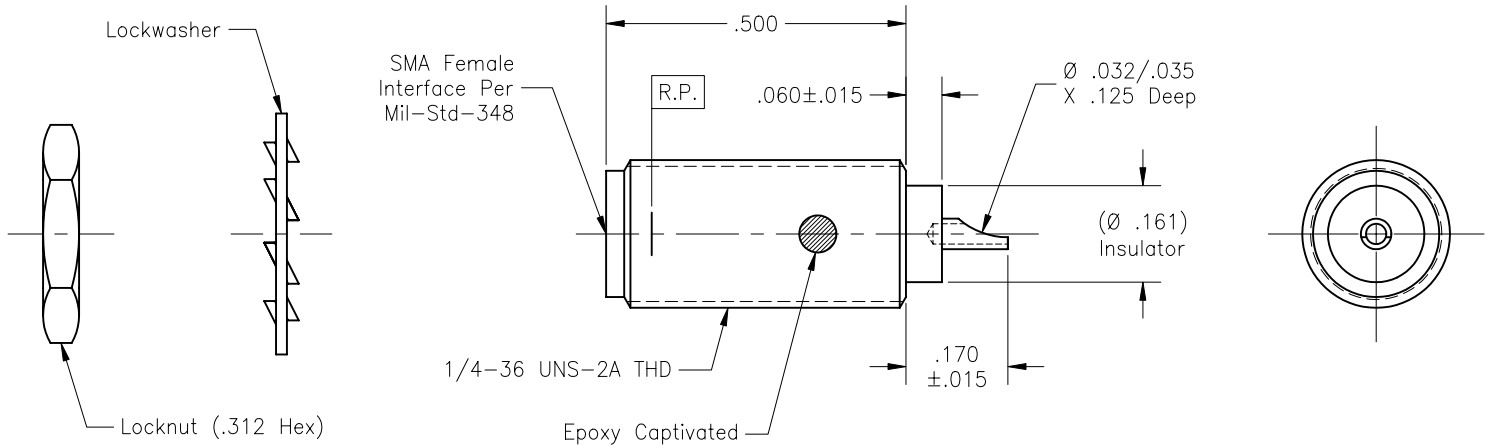

DRAWING NO.	REV.
5293	A

Note(s):

1. Locknut and lockwasher are packaged and shipped unassembled.

MATERIAL(S):

Body & Locknut:
303 sst per ASTM A–582.
Center Conductor:
BeCu alloy per ASTM B–196.
Lockwasher:
410 sst.
Dielectric:
PTFE per ASTM D–1710.
Epoxy:
Sigma VF type HV.

ELECTRICAL(S):

Impedance: 50 Ohms nominal.
Frequency Range: DC to 18.0 GHz.
VSWR: 1.05 + .007 X f(GHz).
Insertion Loss: .04 $\sqrt{f}$ (GHz).
Working Voltage: 335 Vrms max @ sea level.
Dielectric Withstanding Voltage: 1,000 Vrms min.
R.F. HiPot Voltage: 670 Vrms min @ 5MHz.
Corona Level: 250 Vrms @ 70,000 ft.
Insulation Resistance: 5,000 MegOhms min.
R.F. Leakage: –(65 – fGHz) dB min.
Contact Resistance:
Initial:
Center Contact: 3.0 Milliohm max.
Outer Contact: 2.0 Milliohm max.
After Environment:
Center Contact: 4.0 Milliohm max.
Outer Contact: NA.

MECHANICAL(S):

Mating Characteristics:
Interface per Mil–Std–348.
Force To Engage & Disengage:
Torque: 2 inch–pounds max.
Longitudinal Force: NA.
Center Contact Retention:
Axial Force: 6 pounds min.
Connector Durability:
500 cycles min @ 12 cycles/minute max.
Permeability: Less than 2.0 mu.
Center Contact Captivation:
Axial Force: 6 pounds min.
Radial Torque: 4 inch–ounces min.

ENVIRONMENTAL(S):

Temperature Range: –65°C to +125°C.
Thermal Shock:
Mil–Std–202, Method 107, Test Cond. A.
Moisture Resistance:
Mil–Std–202, Method 106. Insulation resistance at least 200 megohms within 5 minutes after removal from humidity.
Corrosion:
Mil–Std–202, Method 101, Test Cond. B.
Vibration:
Mil–Std–202, Method 204, Test Cond. D.
Shock:
Mil–Std–202, Method 213, Test Cond. I.

FINISH(ES):

Body, Locknut & Lockwasher:
(For CC's); Gold plate per ASTM B–488, over nickel under plate per AMS–QQ–N–290.
(For CCSF's); Passivate per ASTM A–967.
Center Conductor:
Gold plate per ASTM B–488, over nickel under plate per AMS–QQ–N–290, over copper strike.

APPLICABLE TENSOLITE DOCUMENTS

WORK STD	PROD INST	ASSY INST
NA	NA	NA

NOTICE

THIS DRAWING EMBODIES A CONFIDENTIAL PROPRIETARY DESIGN ORIGINATED BY TENSOLITE COMPANY AND ALL DESIGN, MANUFACTURING REPRODUCTION, USE AND SALE RIGHTS REGARDING THE SAME ARE EXPRESSLY RESERVED. IT IS SUBMITTED UNDER A CONFIDENTIAL RELATIONSHIP FOR A SPECIFIED PURPOSE AND THE RECIPIENT AGREES BY ACCEPTING THIS DRAWING NOT TO SUPPLY OR DISCLOSE ANY INFORMATION REGARDING IT TO ANY UNAUTHORIZED PERSON TO INCORPORATE IN OTHER PROJECTS ANY SPECIAL FEATURES PECULIAR TO THIS DESIGN. ALL PATENT RIGHTS HERETO ARE EXPRESSLY RESERVED BY TENSOLITE COMPANY, LONG BEACH, CALIFORNIA 90815.

TOLERANCES AND NOTES EXCEPT AS NOTED

DIMENSIONS ARE IN INCHES.
LINEAR .XX ±.015 .XXX ±.005 ANGULAR ± 1/2°
FRACTION ± 1/32

1. MACHINE FINISH: 63 √ RMS
2. BREAK ALL SHARP EDGES .003 MAX.
3. MACHINED FILLETS .005 MAX.
4. MACHINED SURFACES SQUARE TO RESPECTIVE AXIS WITHIN .005 INCHES PER INCH.
5. MACHINED DIAMETERS CONCENTRIC WITHIN .002 T.I.R.
6. DIMENSIONS TO BE MET BEFORE PLATING.
7. CHAMFER ALL THREADS 45°.
8. THREADS PER H–28
9. REMOVE FRAYED EDGES ON TEFLON.
10. REMOVE ALL BURRS.

–	–	–	–
MATERIAL	SIZE	SPECIFICATION	PROCUREMENT

NEXT ASSY

APPROVAL INITIALS		DATE
DRAWN BY	IMG	02.25.02
CHECKED	P.MAO	10.25.06
QUALITY		
ENGINEERING	P.MAO	10.25.06
	DNg	10.26.06

Tensolite
HIGH PERFORMANCE CABLES & INTERCONNECT SYSTEMS
Long Beach, California 90815

TITLE SMA FEMALE BULKHEAD FEEDTHROUGH PANEL TO STRAIGHT SOLDER POT TERMINATION

SCALE	SUB-DIRECTORY\FILENAME	SHEET
6:1	OL_\	1 OF 1

SIZE	CAGE CODE	DRAWING NO.	REV.
C	30990	5293	A