P/N	APPLICABLE NOTE(S)
CCSF	1, 2.1, 2.3, 2.4
CC	1, 2.2, 2.3, 2.4

REVISIONS				
ZONE	REV.	DESCRIPTION(S)	DATE	BY
—	—	—	—	—

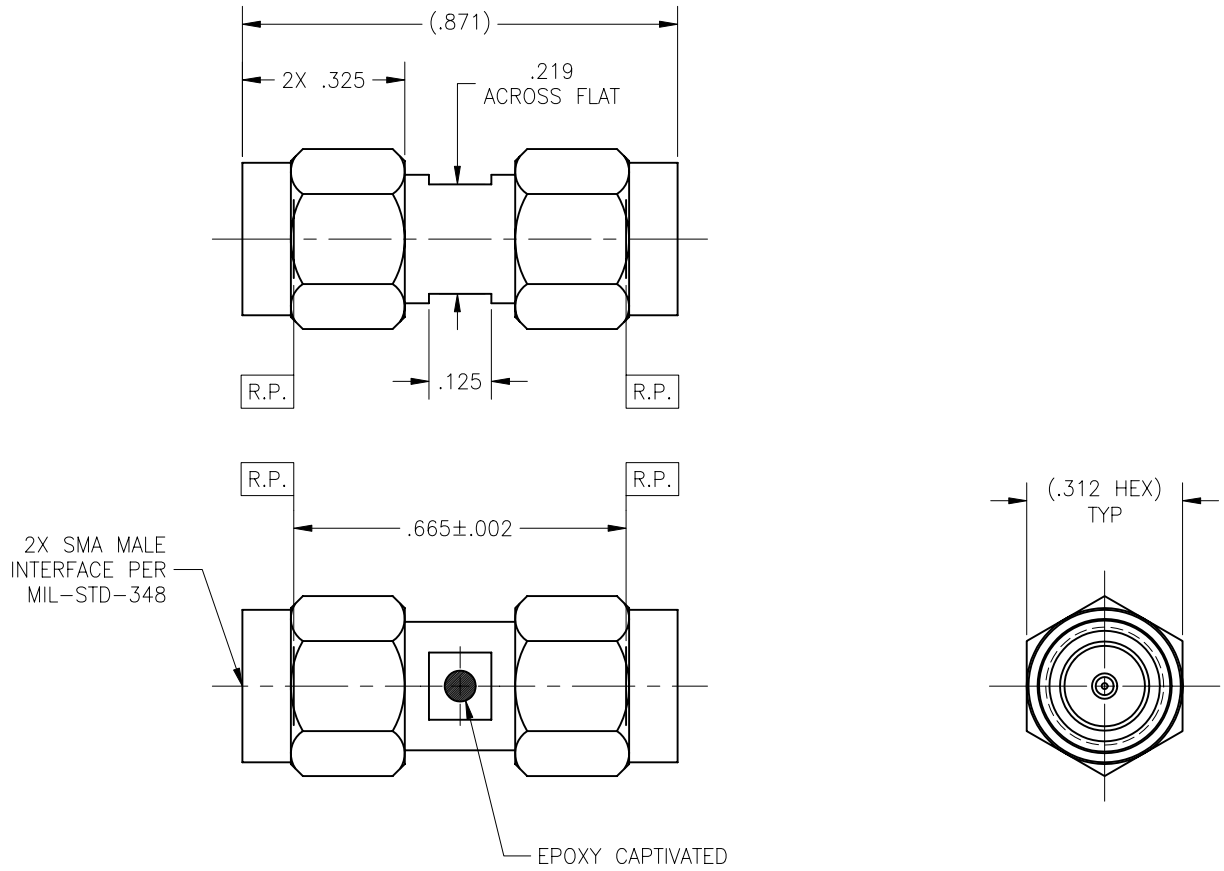

DRAWING NO.	REV.
5390	—

NOTE(S):

1. MATERIAL(S):
   - 1.1 BODY AND COUPLING NUT: 303 SST PER ASTM A-582.
   - 1.2 CENTER CONDUCTOR: BRASS ALLOY PER ASTM B-16.
   - 1.3 INSULATOR PTFE PER ASTM D-1710.
   - 1.4 RETAINING RING: BeCu ALLOY PER ASTM B-197.
   - 1.5 GASKET: SILICONE RUBBER PER A-A-59588.
   - 1.6 EPOXY: SIGMA VF TYPE HV.

2. FINISH(ES):
   - 2.1 BODY AND COUPLING NUT (FOR CCSF): PASSIVATE PER ASTM A-967.
   - 2.2 BODY AND COUPLING NUT (FOR CC): GOLD PLATE PER ASTM B-488 OVER NICKEL UNDERPLATE PER AMS-QQ-N-290.
   - 2.3 CENTER CONDUCTOR: GOLD PLATE PER ASTM B-488 OVER NICKEL UNDERPLATE PER AMS-QQ-N-290 OVER COPPER STRIKE.
   - 2.4 INSULATOR, RETAINING RING, GASKET AND EPOXY: NONE.

APPLICABLE TENSOLITE DOCUMENTS

WORK STD	PROD INST	ASSY INST
NA	NA	NA

NOTICE

THIS DRAWING EMBODIES A CONFIDENTIAL PROPRIETARY DESIGN ORIGINATED BY TENSOLITE COMPANY AND ALL DESIGN, MANUFACTURING REPRODUCTION, USE AND SALE RIGHTS REGARDING THE SAME ARE EXPRESSLY RESERVED. IT IS SUBMITTED UNDER A CONFIDENTIAL RELATIONSHIP FOR A SPECIFIED PURPOSE AND THE RECIPIENT AGREES BY ACCEPTING THIS DRAWING NOT TO SUPPLY OR DISCLOSE ANY INFORMATION REGARDING IT TO ANY UNAUTHORIZED PERSON TO INCORPORATE IN OTHER PROJECTS ANY SPECIAL FEATURES PECULIAR TO THIS DESIGN. ALL PATENT RIGHTS HERETO ARE EXPRESSLY RESERVED BY TENSOLITE COMPANY, LONG BEACH, CALIFORNIA 90815.

TOLERANCES AND NOTES EXCEPT AS NOTED

DIMENSIONS ARE IN INCHES.
LINEAR .XX ±.015 .XXX ±.005 ANGULAR ± 1/2°
FRACTION ± 1/32

1. MACHINE FINISH: 63 RMS
2. BREAK ALL SHARP EDGES .003 MAX.
3. MACHINED FILLETS .005 MAX.
4. MACHINED SURFACES SQUARE TO RESPECTIVE AXIS WITHIN .005 INCHES PER INCH.
5. MACHINED DIAMETERS CONCENTRIC WITHIN .002 T.I.R.
6. DIMENSIONS TO BE MET BEFORE PLATING.
7. CHAMFER ALL THREADS 45°.
8. THREADS PER H-28
9. REMOVE FRAYED EDGES ON TEFLON.
10. REMOVE ALL BURRS.

SEE NOTE(S)	—	SEE NOTE(S)	—
MATERIAL	SIZE	SPECIFICATION	PROCUREMENT

NEXT ASSY

APPROVAL INITIALS		DATE
DRAWN BY	P.MAO	04.18.05
CHECKED	P.MAO	04.18.05
QUALITY		
ENGINEERING	P.MAO	04.18.05
	PM	04.18.05

Tensolite
HIGH PERFORMANCE CABLES & INTERCONNECT SYSTEMS
Long Beach, California 90815

TITLE: SMA MALE TO SMA MALE STRAIGHT ADAPTER

SCALE	SUB-DIRECTORY\FILENAME	SHEET
5:1	OL_\	1 OF 1

SIZE	CAGE CODE	DRAWING NO.	REV.
C	30990	5390	—