P/N	APPLICABLE NOTE(S)	(Ø A)
−2CC	1,2,3	.020
−2CCSF	1,2,3	.020
−3CC	1,2,3	.010
−3CCSF	1,2,3	.010
−4CC	1,2,3	.012
−4CCSF	1,2,3	.012
−5CC	1,2,3	.015
−5CCSF	1,2,3	.015
−6CC	1,2,3	.018
−6CCSF	1,2,3	.018

REVISIONS				
ZONE	REV	DESCRIPTION	DATE	BY
—	—	—	—	—

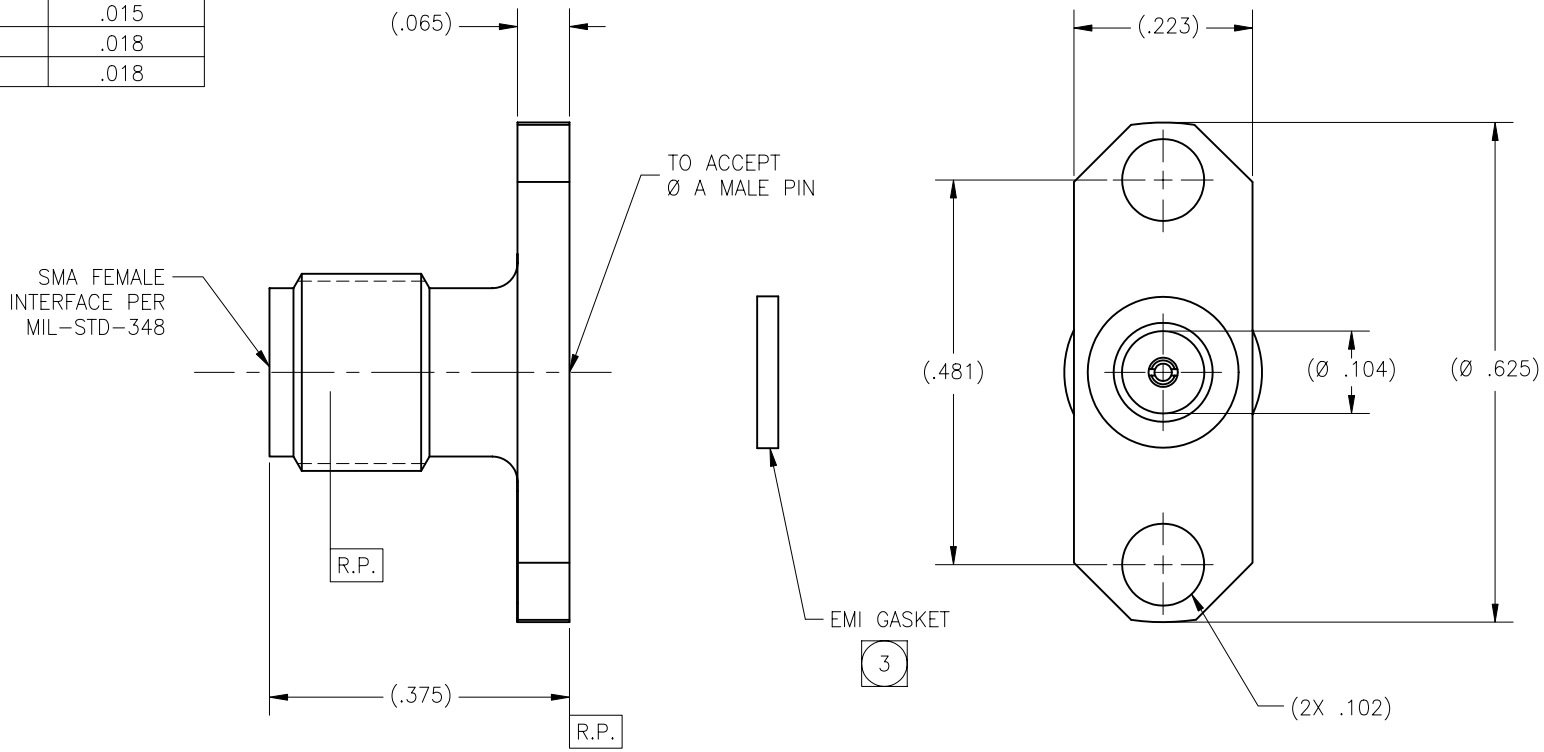

DRAWING NO.	REV.
5602	–

NOTES(S):

1. MATERIAL(S):
   - 1.1 BODY: 303 SST PER ASTM A−582.
   - 1.2 CENTER CONDUCTOR: BeCu ALLOY C173 PER ASTM B−196.
   - 1.3 INSULATOR: TEFLON PER ASTM D−1710.
   - 1.4 EMI GASKET: SILICONE PER MIL−G−83528
2. FINISH(ES):
   - 2.1 BODY:
     (FOR CCSF's) PASSIVATED PER ASTM A−967
     (FOR CC's) GOLD PLATE PER ASTM B−488 OVER NICKEL PLATE PER AMS−QQ−N−290.
   - 2.2 CENTER CONDUCTOR:
     GOLD PLATE PER ASTM B−488 OVER NICKEL PLATE PER AMS−QQ−N−290.
   - 2.3 EMI GASKET & NSULATOR: NONE

3. EMI GASKET TO BE PACKAGED AND SHIPPED UNASSEMBLED.

NOTICE

THIS DRAWING EMBODIES A CONFIDENTIAL PROPRIETARY DESIGN ORIGINATED BY TENSOLITE COMPANY AND ALL DESIGN, MANUFACTURING REPRODUCTION, USE AND SALE RIGHTS REGARDING THE SAME ARE EXPRESSLY RESERVED. IT IS SUBMITTED UNDER A CONFIDENTIAL RELATIONSHIP FOR A SPECIFIED PURPOSE AND THE RECIPIENT AGREES BY ACCEPTING THIS DRAWING NOT TO SUPPLY OR DISCLOSE ANY INFORMATION REGARDING IT TO ANY UNAUTHORIZED PERSON TO INCORPORATE IN OTHER PROJECTS ANY SPECIAL FEATURES PECULIAR TO THIS DESIGN. ALL PATENT RIGHTS HERETO ARE EXPRESSLY RESERVED BY TENSOLITE COMPANY, LONG BEACH, CALIFORNIA 90815.

TOLERANCES AND NOTES EXCEPT AS NOTED

DIMENSIONS ARE IN INCHES.
LINEAR .XX ±.015 .XXX ±.005 ANGULAR ± 1/2°
FRACTION ± 1/32

1. MACHINE FINISH: 63 √ RMS
2. BREAK ALL SHARP EDGES .003 MAX.
3. MACHINED FILLETS .005 MAX.
4. MACHINED SURFACES SQUARE TO RESPECTIVE AXIS WITHIN .005 INCHES PER INCH.
5. MACHINED DIAMETERS CONCENTRIC WITHIN .002 T.I.R.
6. DIMENSIONS TO BE MET BEFORE PLATING.
7. CHAMFER ALL THREADS 45°.
8. THREADS PER H−28
9. REMOVE FRAYED EDGES ON TEFLON.
10. REMOVE ALL BURRS.

SEE NOTES	–	SEE NOTES	–
MATERIAL	SIZE	SPECIFICATION	PROCUREMENT

NEXT ASSY

APPROVAL	INITIALS	DATE
DRAWN BY	R.C.	03.20.02
CHECKED		
QUALITY		
ENGINEERING	ATV	06.19.02

Tensolite
HIGH PERFORMANCE CABLES & INTERCONNECT SYSTEMS
Long Beach, California 90815

TITLE SMA FEMALE 2 HOLE FLANGE (.223 X .625) MOUNT FIELD REPLACEABLE (W/ EMI GASKET)

SCALE	SUB-DIRECTORY\FILENAME	SHEET 1 OF 1
8/1	OL_	

SIZE	CAGE CODE	DRAWING NO.	REV.
C	30990	5602	–