REVISIONS				
ZONE	REV	DESCRIPTION	DATE	BY
—	—	—	—	—

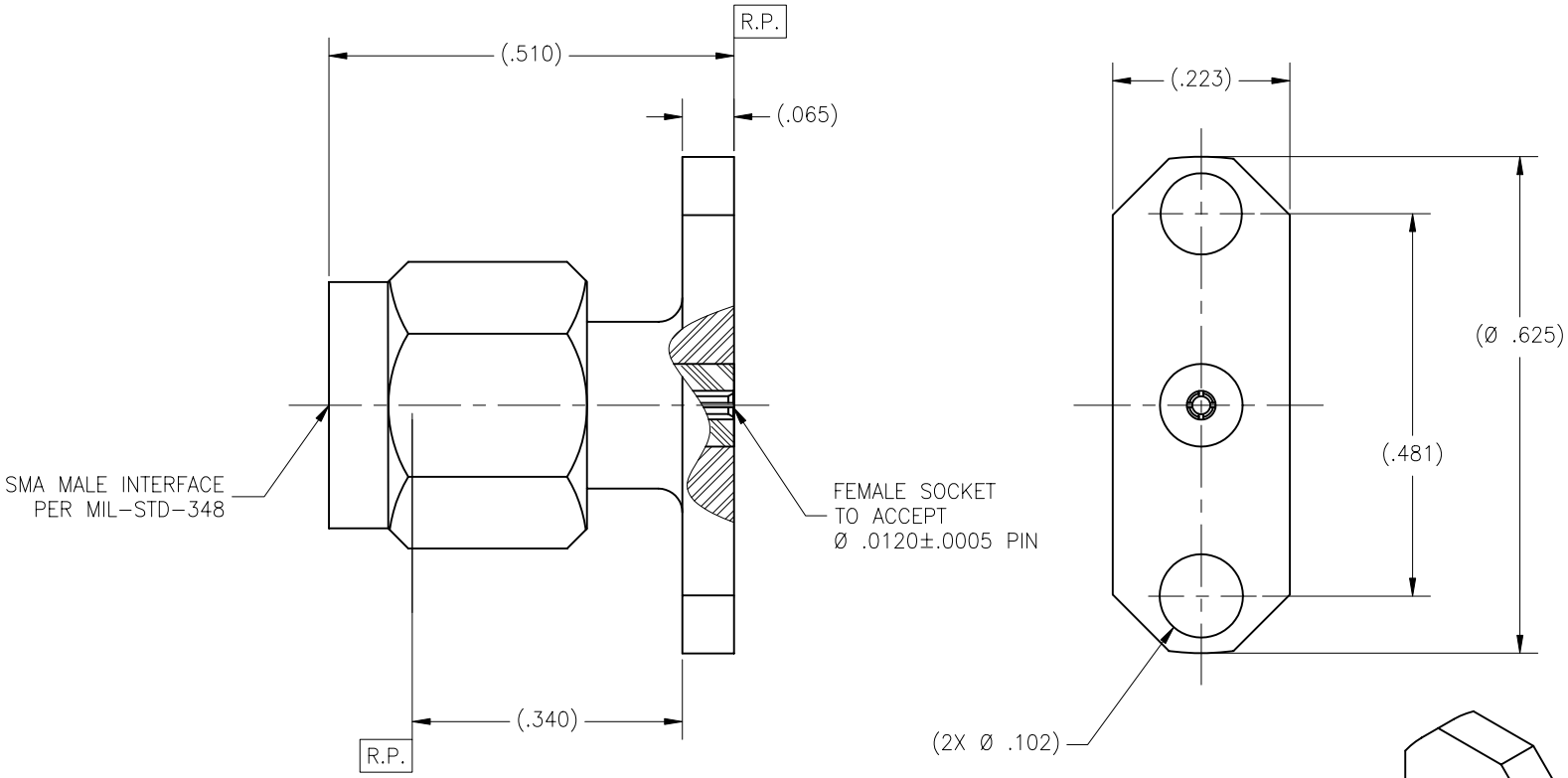

DRAWING NO.	REV.
5664-4CC & -4CCSF	—

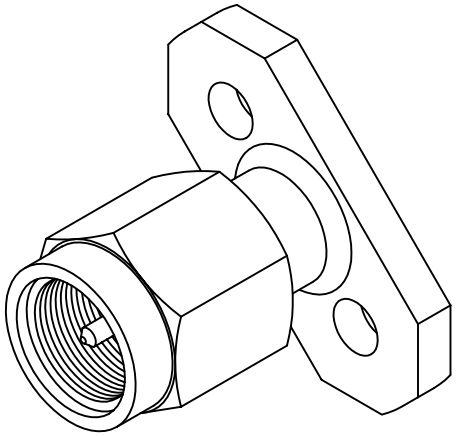

NOTE(S):

1. MATERIAL(S):
   - 1.1 BODY & COUPLING NUT: 303 SST PER ASTM A-582
   - 1.2 CONTACT & RETAINING RING: BeCu ALLOY PER ASTM B-196
   - 1.4 GASKET: SILICONE RUBBER PER ZZ-R-765
   - 1.5 INSULATOR: PTFE PER ASTM D-1710
2. FINISH(ES):
   - 2.1 BODY, COUPLING NUT (-4CC) & CONTACT: GOLD PLATE PER ASTM B-488 OVER NICKEL PLATE PER QQ-N-290
   - 2.2 COUPLING NUT (-4CCSF): PASSIVATE PER ASTM A-967
   - 2.3 RETAINING RING, GASKET & INSULATOR: NONE
3. ELECTRICAL PERFORMANCE:
   - 3.1 FREQUENCY RANGE: DC - 26 GHz
   - 3.2 R.F. INSERTION LOSS: 0.1 dB MAX TO 26 GHz
   - 3.3 VSWR: 1.10:1 DC-18 GHz
     1.25:1 18-26 GHz

NOTICE

THIS DRAWING EMBODIES A CONFIDENTIAL PROPRIETARY DESIGN ORIGINATED BY TENSOLITE COMPANY AND ALL DESIGN, MANUFACTURING REPRODUCTION, USE AND SALE RIGHTS REGARDING THE SAME ARE EXPRESSLY RESERVED. IT IS SUBMITTED UNDER A CONFIDENTIAL RELATIONSHIP FOR A SPECIFIED PURPOSE AND THE RECIPIENT AGREES BY ACCEPTING THIS DRAWING NOT TO SUPPLY OR DISCLOSE ANY INFORMATION REGARDING IT TO ANY UNAUTHORIZED PERSON OR TO INCORPORATE IN OTHER PROJECTS ANY SPECIAL FEATURES PECULIAR TO THIS DESIGN. ALL PATENT RIGHTS HERETO ARE EXPRESSLY RESERVED BY TENSOLITE COMPANY, LONG BEACH, CALIFORNIA 90815

TOLERANCES AND NOTES EXCEPT AS NOTED

DIMENSIONS ARE IN INCHES.
LINEAR .XX ±.015 .XXX ±.005 ANGULAR ± 1/2°
FRACTION ± 1/32

1. MACHINE FINISH: 63 RMS
2. BREAK ALL SHARP EDGES .003 MAX.
3. MACHINED FILLETS .005 MAX.
4. MACHINED SURFACES SQUARE TO RESPECTIVE AXIS WITHIN .005 INCHES PER INCH.
5. MACHINED DIAMETERS CONCENTRIC WITHIN .002 T.I.R.
6. DIMENSIONS TO BE MET BEFORE PLATING.
7. CHAMFER ALL THREADS 45°.
8. THREADS PER H-28
9. REMOVE FRAYED EDGES ON TEFLON.
10. REMOVE ALL BURRS.

MATERIAL	SIZE	SPECIFICATION	PROCUREMENT
SEE NOTES	—	SEE NOTES	—

NEXT ASSY

APPROVAL INITIALS		DATE
DRAWN BY	DKN	03.21.00
CHECKED		
QUALITY		
ENGINEERING	ATV	03.28.00

Tensolite RF/Microwave Connectors
Long Beach, California 90815

TITLE SMA MALE 2 HOLE FLANGE MOUNT TO FEMALE SOCKET TERMINATION

SCALE	SUB-DIRECTORY\FILENAME	SHEET
8/1	_OL_XX\OL_AAZR	1 OF 1

SIZE	CAGE CODE	DRAWING NO.	REV.
C	30990	5664-4CC & -4CCSF	—