P/N	Ø A	Ø B	C	D	Ø E
−2CC	.0200±.0005	(.550)	(.400)	(.187)	(.103)
−2CCSF					
−2CCNP					
−3CC	.0100±.0005	(.550)	(.400)	(.187)	(.103)
−3CCSF					
−3CCNP					
−4CC	.0120±.0005	(.550)	(.400)	(.187)	(.103)
−4CCSF					
−4CCNP					
−5CC	.0150±.0005	(.550)	(.400)	(.187)	(.103)
−5CCSF					
−5CCNP					
−6CC	.0180±.0005	(.550)	(.400)	(.187)	(.103)
−6CCSF					
−6CCNP					
−7CC	.0200±.0005	(.480)	(.346)	(.173)	(.070)
−7CCSF					
−7CCNP					

REVISIONS

ZONE	REV	DESCRIPTION	DATE	BY
–	A	ECO 19455	08.07.06	P.MAO

DRAWING NO. 5678 REV. A

MATERIAL:

Body:
SST 303 per ASTM A−582.
Center Conductor:
BeCu alloy per ASTM B−196.
Insulator:
PTFE per ASTM D−1710.

ELECTRICAL:

Impedance: 50 Ohms nominal.
Frequency Range: DC to 26.0 GHz.
VSWR: 1.06 + .005 x f(GHz).
Insertion Loss: .03 $\sqrt{f}$(GHz).
Working Voltage: 335 Vrms max @ sea level.
Dielectric Withstanding Voltage: 1000 Vrms min.
R.F. HiPot Voltage: 670 Vrms min @ 5MHz.
Corona Level: 250 Vrms @ 70,000 ft.
Insulation Resistance: 5000 MegOhms min.
R.F. Leakage: −(90 − fGHz).
Contact Resistance:
Initial:
Center Contact: 3.0 Milliohm max.
Outer Contact: 2.0 Milliohm max.
After Environment:
Center Contact: 4.0 Milliohm max.
Outer Contact: NA.

MECHANICAL:

Mating Characteristics:
Interface per Mil−Std−348.
Force To Engage & Disengage:
Torque: 2 inch−pounds max.
Longitudinal Force: NA.
Center Contact Retention:
Axial Force: 6 pounds min.
Connector Durability:
500 cycles min @ 12 cycles/minute max.
Permeability: Less than 2.0 mu.
Center Contact Captivation:
Axial Force from Interface: 6 pounds min.
Axial Force from Rear End: 3 pounds min.
Torque: 4 inch−ounces min.

ENVIRONMENTAL:

Temperature Range: −65°C to +165°C.
Thermal Shock:
Mil−Std−202, Method 107, Test Cond. B.
Moisture Resistance:
Mil−Std−202, Method 106, except step 7b shall be omitted. Insulation resistance at least 1000 MegOhms within 5 minutes after removal from humidity.
Corrosion:
Mil−Std−202, Method 101, Test Cond. B.
Vibration:
Mil−Std−202, Method 204, Test Cond. D.
Shock:
Mil−Std−202, Method 213, Test Cond. I.

FINISH:

Body (for CCSF):
Passivate per ASTM A−967.
Body (for CC):
Gold plate per ASTM B−488, over nickel under plate per AMS−QQ−N−290.
Body (for CCNP):
Nickel plate per AMS−QQ−N−290.
Center Conductor:
Gold plate per ASTM B−488, over nickel under plate per AMS−QQ−N−290.

APPLICABLE TENSOLITE DOCUMENTS

WORK STD	PROD INST	ASSY INST
NA	NA	NA

NOTICE
THIS DRAWING EMBODIES A CONFIDENTIAL PROPRIETARY DESIGN ORIGINATED BY TENSOLITE COMPANY AND ALL DESIGN, MANUFACTURING REPRODUCTION, USE AND SALE RIGHTS REGARDING THE SAME ARE EXPRESSLY RESERVED. IT IS SUBMITTED UNDER A CONFIDENTIAL RELATIONSHIP FOR A SPECIFIED PURPOSE AND THE RECIPIENT AGREES BY ACCEPTING THIS DRAWING NOT TO SUPPLY OR DISCLOSE ANY INFORMATION REGARDING IT TO ANY UNAUTHORIZED PERSON TO INCORPORATE IN OTHER PROJECTS ANY SPECIAL FEATURES PECULIAR TO THIS DESIGN. ALL PATENT RIGHTS HERETO ARE EXPRESSLY RESERVED BY TENSOLITE COMPANY, LONG BEACH, CALIFORNIA 90815.

TOLERANCES AND NOTES EXCEPT AS NOTED
DIMENSIONS ARE IN INCHES.
LINEAR .XX ±.015 .XXX ±.005 ANGULAR ± 1/2°
FRACTION ± 1/32

1. MACHINE FINISH: 63 RMS
2. BREAK ALL SHARP EDGES .003 MAX.
3. MACHINED FILLETS .005 MAX.
4. MACHINED SURFACES SQUARE TO RESPECTIVE AXIS WITHIN .005 INCHES PER INCH.
5. MACHINED DIAMETERS CONCENTRIC WITHIN .002 T.I.R.
6. DIMENSIONS TO BE MET BEFORE PLATING.
7. CHAMFER ALL THREADS 45°.
8. THREADS PER H−28
9. REMOVE FRAYED EDGES ON TEFLON.
10. REMOVE ALL BURRS.

–	–	–	–
MATERIAL	SIZE	SPECIFICATION	PROCUREMENT

APPROVAL INITIALS		DATE
DRAWN BY	DKN	08.07.06
CHECKED BY	PM	04.07.07
TEST ENGG		
QUALITY		
DESIGN ENGG	PMAO	04.10.07
MFG ENGG		

Tensolite
HIGH PERFORMANCE CABLES & INTERCONNECT SYSTEMS
Long Beach, California 90815

TITLE SMA FEMALE STRAIGHT 2 HOLE FLANGE MOUNT FIELD REPLACEABLE

SCALE 10:1 | SUB-DIRECTORY\FILENAME OL_\ | SHEET 1 OF 2

SIZE C | CAGE CODE 30990 | DRAWING NO. 5678 | REV. A

ENG−DWG REV. B

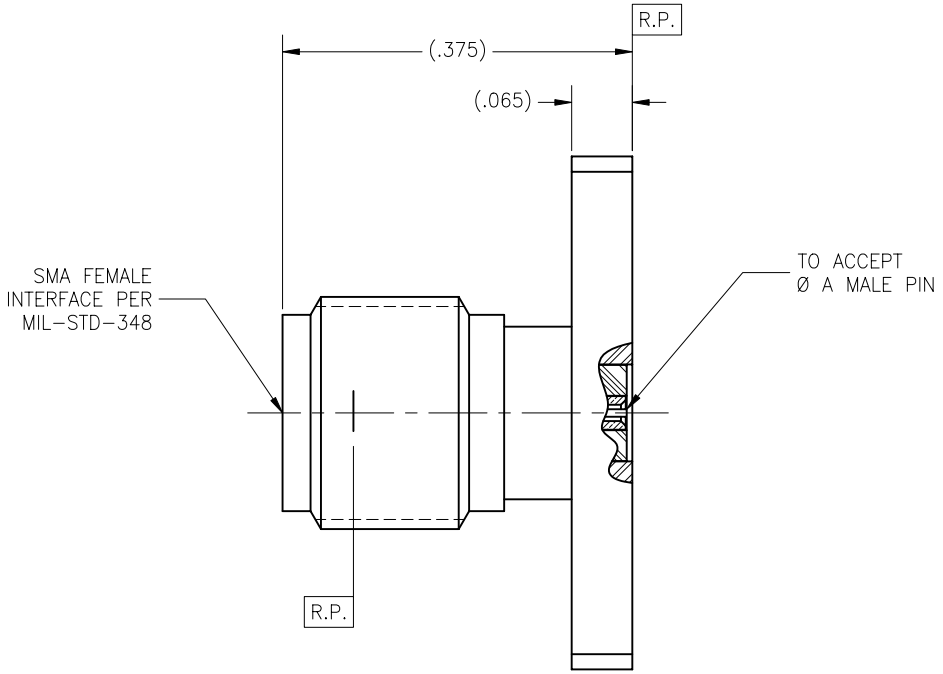

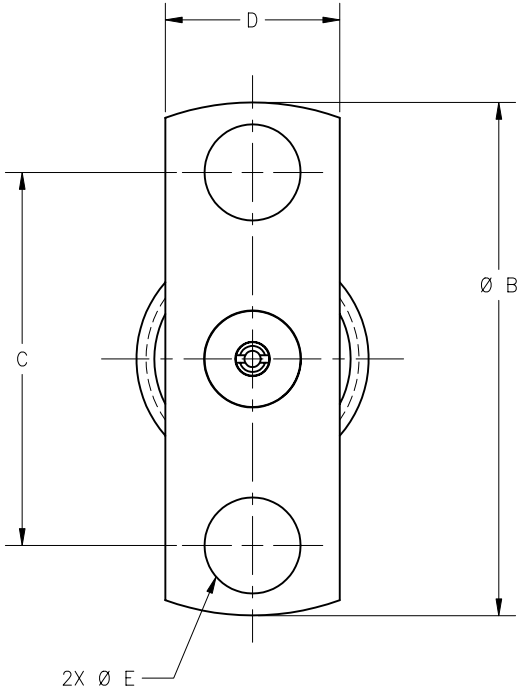

SCALE	SUB-DIRECTORY\FILENAME		
10:1	_OL\	SHEET 2 OF 2	
SIZE C	CAGE CODE 30990	DRAWING NO. 5678	REV. A

ENG-DWG REV. B