P/N	Ø A
-2CC	.0200±.0005
-2CCSF	.0200±.0005
-3CC	.0100±.0005
-3CCSF	.0100±.0005
-4CC	.0120±.0005
-4CCSF	.0120±.0005
-5CC	.0150±.0005
-5CCSF	.0150±.0005
-6CC	.0180±.0005
-6CCSF	.0180±.0005

REVISIONS

ZONE	REV	DESCRIPTION	DATE	BY
-	A	ECO 14522	05.13.02	AGS
-	B	ECO 20516	08.29.07	DKN

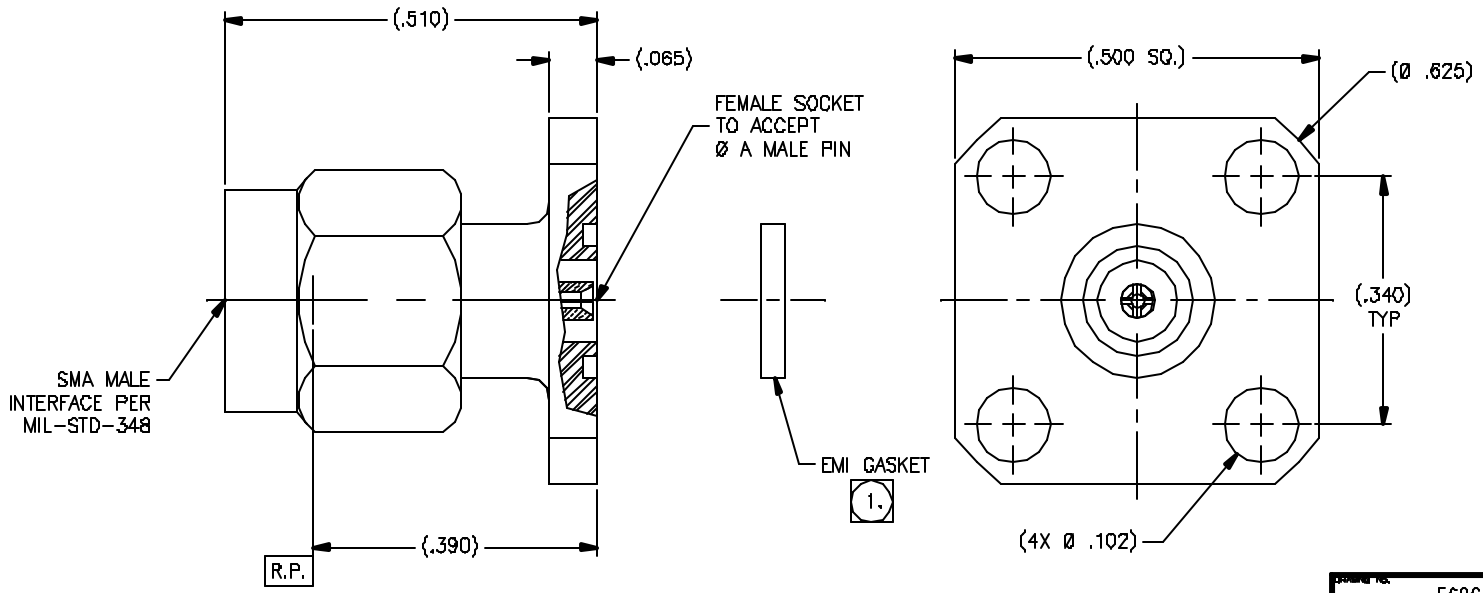

NOTE:

1. EMI GASKET TO BE PACKAGED AND SHIPPED UNASSEMBLED.

DRAWING NO. 5686 REV. B

MATERIAL:

Body & Coupling Nut:
SST 303 per ASTM A-582.
Center Conductor & Retaining Ring:
BeCu alloy per ASTM B-196.
Insulator:
PTFE per ASTM D-1710.
Gasket:
Silicone Rubber per A-A-59588.
EMI Gasket:
Silicone per MIL-G-83528.

ELECTRICAL:

Impedance: 50 Ohms nominal.
Frequency Range: DC to 18.0 GHz.
VSWR: 1.06 + .005 x f(GHz).
Insertion Loss: .03 √f(GHz).
Working Voltage: 335 Vrms max @ sea level.
Dielectric Withstanding Voltage: 1500 Vrms min.
R.F. HiPot Voltage: 1000 Vrms min @ 5MHz.
Corona Level: 375 Vrms @ 70,000 ft.
Insulation Resistance: 5000 MegOhms min.
R.F. Leakage: -90 dB from 2-3 GHz
Contact Resistance:
Initial:
Center Contact: 3.0 Milliohm max.
Outer Contact: 2.0 Milliohm max.

MECHANICAL:

Mating Characteristics:
Interface per Mil-Std-348.
Force To Engage & Disengage:
Torque: 2 inch-pounds max.
Longitudinal Force: NA.
Connector Durability:
500 cycles min @ 12 cycles/minute max.
Permeability: Less than 2.0 mu.
Center Contact Captivation:
Axial Force: 6 lbs min. from interface end
3 lbs min. from rear end
Torque: 4 inch-ounces min.

ENVIRONMENTAL:

Temperature Range: -65°C to +165°C.
Thermal Shock:
Mil-Std-202, Method 107, Test Cond. B.
Moisture Resistance:
Mil-Std-202, Method 106, except step 7b shall be omitted. Insulation resistance at least 1000 MegOhms within 5 minutes after removal from humidity.
Corrosion:
Mil-Std-202, Method 101, Test Cond. B.
Vibration:
Mil-Std-202, Method 204, Test Cond. D.
Shock:
Mil-Std-202, Method 213, Test Cond. I.

FINISH:

Body & Coupling Nut: (for CCSF):
Passivate per ASTM A-967.
Body & Coupling Nut: (for CC):
Gold plate per ASTM B-488, over nickel under plate per AMS-QQ-N-290.
Center Conductor:
Gold plate per ASTM B-488, over nickel under plate per AMS-QQ-N-290.

APPLICABLE TENSOLITE DOCUMENTS

WORK STD	PROD INST	ASSY INST
NA	NA	NA

NOTICE
THIS DRAWING EMBODIES A CONFIDENTIAL PROPRIETARY DESIGN CREATED BY TENSOLITE COMPANY AND ALL DESIGN, MANUFACTURING REPRODUCTION, USE AND SALE RIGHTS REGARDING THE SAME ARE EXPRESSLY RESERVED. IT IS SUBMITTED UNDER A CONFIDENTIAL RELATIONSHIP FOR A LIMITED PURPOSE AND THE RECEIVING PARTY BY ACCEPTING THIS DRAWING AGREES NOT TO SUPPLY OR DISCLOSE ANY INFORMATION REGARDING IT TO ANY UNAUTHORIZED PERSON OR INCORPORATE IN OTHER PROJECTS ANY SPECIAL FEATURES PECULIAR TO THIS DESIGN. ALL PATENT RIGHTS HERETO ARE EXPRESSLY RESERVED BY TENSOLITE COMPANY, LONG BEACH, CALIFORNIA 90815.

TOLERANCES AND NOTES
EXCEPT AS NOTED
DIMENSIONS ARE IN INCHES.
UNLESS .XX ±.010 .XXX ±.005 ANGULAR ± 1/2°
FRACTION ± 1/32
1. MACHINE FINISH: 63 RMS
2. BREAK ALL SHARP EDGES .010 MAX.
3. MACHINED FILLETS .005 MAX.
4. MACHINED SURFACES SQUARE TO PERPENDICULAR AXIS WITHIN .005 INCHES PER INCH.
5. MACHINED DIAMETERS CONCENTRIC WITHIN .005 T.I.R.
6. DIMENSIONS TO BE MET BEFORE PLATING.
7. REMOVE ALL BURRS 4F.
8. TAGGING PER H-28.
9. REMOVE FRAYED EDGES ON TEFLON.
10. REMOVE ALL BURRS.

-	-	-	-
MATERIAL	SIZE	SPECIFICATION	PROCUREMENT

APPROVAL STATUS		DATE
DRAWN BY	RG	04.01.02
CHECKED BY		
TEST ENGR		
QUALITY		
DESIGN ENGR	DNg	08.30.07
MFG ENGR		

Tensolite
HIGH PERFORMANCE CABLES & INTERCONNECT SYSTEMS
Long Beach, California 90815

TITLE: SMA MALE STRAIGHT 4 HOLE FLANGE MOUNT FIELD REPLACEABLE (W/ EMI GASKET)

SCALE 8/1 | SHEET 1 OF 1 | SIZE C | CAGE CODE 30990 | DRAWING NO. 5686 | REV. B

ENG-DWG REV. B