| P/N | APPLICABLE NOTE(S) | (Ø A) | CABLE TYPE |
|---|---|---|---|
| −1 | 1,2 | .143 MIN | Ø .141 S/R |
| −1SF | 1,2 | .143 MIN | Ø .141 S/R |
| −1CC | 1,2 | .143 MIN | Ø .141 S/R |
| −1CCSF | 1,2 | .143 MIN | Ø .141 S/R |
| −2 | 1,2 | .088 MIN | Ø .085 S/R |
| −2SF | 1,2 | .088 MIN | Ø .085 S/R |
| −2CC | 1,2 | .088 MIN | Ø .085 S/R |
| −2CCSF | 1,2 | .088 MIN | Ø .085 S/R |
| −3 | 1,2 | .143 MIN | Ø .141 LOW LOSS |
| −3SF | 1,2 | .143 MIN | Ø .141 LOW LOSS |
| −3CC | 1,2 | .143 MIN | Ø .141 LOW LOSS |
| −3CCSF | 1,2 | .143 MIN | Ø .141 LOW LOSS |

| REVISIONS | | | | |
|---|---|---|---|---|
| ZONE | REV | DESCRIPTION | DATE | BY |
| – | A | ECO 9202 | 09/09/98 | JLA |
| – | B | ECO 14510 | 05.09.02 | DKN |
| | | | | |

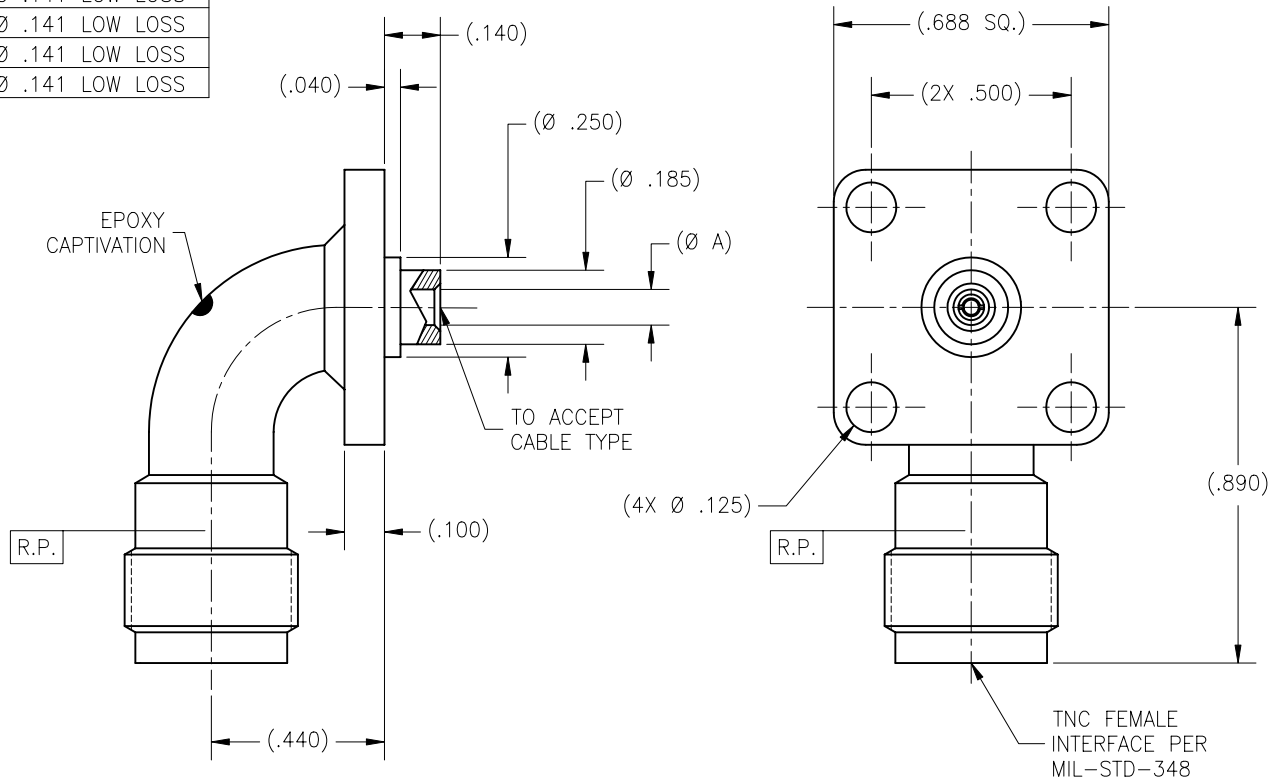


| DRAWING NO. | REV. |
|---|---|
| 9031 | B |

NOTES(S):

1. MATERIAL(S):
   - 1.1 BODY & CABLE INSERT: 303 SST PER ASTM A−582.
   - 1.2 CENTER CONDUCTOR: BeCu ALLOY C173 PER ASTM B−196.
   - 1.3 INSULATOR: PTFE PER ASTM D−1710.
   - 1.4 EPOXY: SIGMA VF TYPE HV.
2. FINISH(ES):
   - 2.1 BODY & CABLE INSERT: (FOR SF's) ZONE GOLD PLATED
     (FOR CCSF & SF's) PASSIVATED PER ASTM A−967
     ZONE GOLD PLATE − CABLE ENTRY
     (FOR BASIC & CC's) GOLD PLATE PER ASTM B−488 OVER NICKEL PLATE PER AMS−QQ−N−290.
   - 2.2 CENTER CONDUCTOR: GOLD PLATE PER ASTM B−488 OVER NICKEL PLATE PER AMS−QQ−N−290.
   - 2.3 INSULATOR & EPOXY: NONE


NOTICE

THIS DRAWING EMBODIES A CONFIDENTIAL PROPRIETARY DESIGN ORIGINATED BY TENSOLITE COMPANY AND ALL DESIGN, MANUFACTURING REPRODUCTION, USE AND SALE RIGHTS REGARDING THE SAME ARE EXPRESSLY RESERVED. IT IS SUBMITTED UNDER A CONFIDENTIAL RELATIONSHIP FOR A SPECIFIED PURPOSE AND THE RECIPIENT AGREES BY ACCEPTING THIS DRAWING NOT TO SUPPLY OR DISCLOSE ANY INFORMATION REGARDING IT TO ANY UNAUTHORIZED PERSON TO INCORPORATE IN OTHER PROJECTS ANY SPECIAL FEATURES PECULIAR TO THIS DESIGN. ALL PATENT RIGHTS HERETO ARE EXPRESSLY RESERVED BY TENSOLITE COMPANY, LONG BEACH, CALIFORNIA 90815.


TOLERANCES AND NOTES EXCEPT AS NOTED

DIMENSIONS ARE IN INCHES.
LINEAR .XX ±.015 .XXX ±.005 ANGULAR ± 1/2°
FRACTION ± 1/32

1. MACHINE FINISH: 63 RMS
2. BREAK ALL SHARP EDGES .003 MAX.
3. MACHINED FILLETS .005 MAX.
4. MACHINED SURFACES SQUARE TO RESPECTIVE AXIS WITHIN .005 INCHES PER INCH.
5. MACHINED DIAMETERS CONCENTRIC WITHIN .002 T.I.R.
6. DIMENSIONS TO BE MET BEFORE PLATING.
7. CHAMFER ALL THREADS 45°.
8. THREADS PER H−28
9. REMOVE FRAYED EDGES ON TEFLON.
10. REMOVE ALL BURRS.

| MATERIAL | SIZE | SPECIFICATION | PROCUREMENT |
|---|---|---|---|
| SEE NOTES | – | SEE NOTES | – |

NEXT ASSY

| APPROVAL INITIALS | | DATE |
|---|---|---|
| DRAWN BY | BRD | 05/22/95 |
| CHECKED | | |
| QUALITY | | |
| ENGINEERING | ATV | 12.06.02 |

Tensolite
HIGH PERFORMANCE CABLES & INTERCONNECT SYSTEMS
Long Beach, California 90815

TITLE TNC FEMALE RADIUS RIGHT ANGLE 4 HOLE FLANGE (.688 SQ.) MOUNT TO SEMI-RIGID CABLE

| SCALE | SUB-DIRECTORY\FILENAME | SHEET |
|---|---|---|
| 4/1 | OL_ | 1 OF 1 |

| SIZE | CAGE CODE | DRAWING NO. | REV. |
|---|---|---|---|
| C | 30990 | 9031 | B |