P/N
CC
CCSF

REVISIONS				
ZONE	REV	DESCRIPTION	DATE	BY
–	A	ECO 20909	01.21.08	DKN

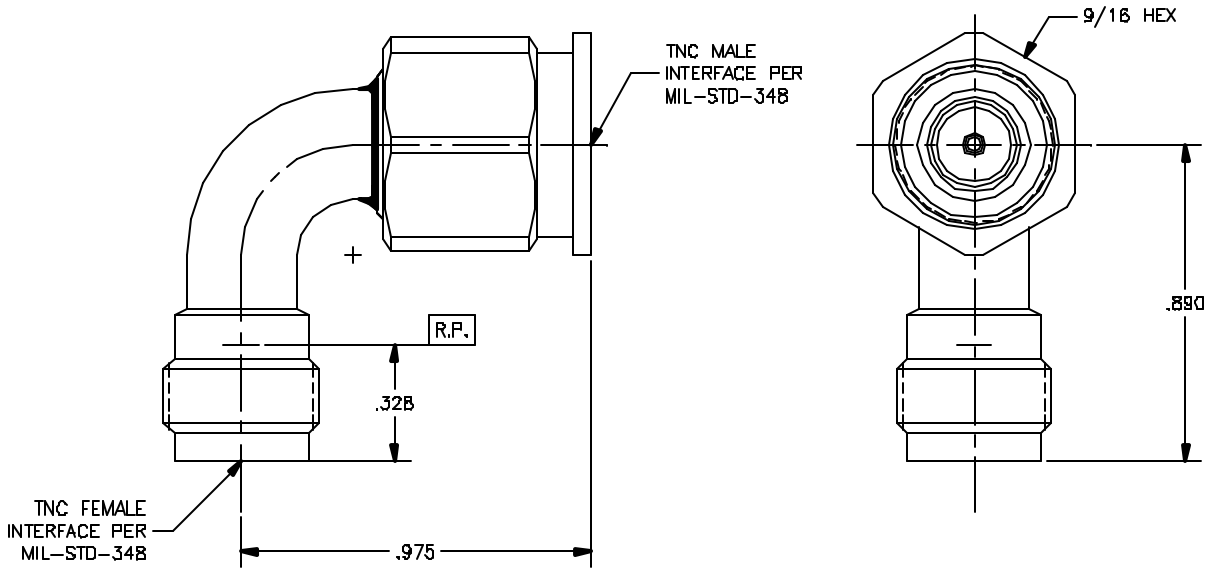

DRAWING NO.	REV.
9050	A

MATERIAL:

R/A Body:
303 sst per ASTM A-743.
Coupling Nut, Male Body & Press Ring:
303 sst per ASTM A-582.
Center Conductor:
BeCu alloy per ASTM B-196.
Dielectric:
PTFE per ASTM D-1710.
Gasket:
Silicon Rubber per A-A-59588.

ELECTRICAL:

Impedance: 50 Ohms nominal.
Frequency Range: DC to 18.0 GHz.
VSWR: 1.08 + .009 x f(GHz).
Insertion Loss: .25 dB max to 18GHz.
Working Voltage: 500 Vrms @ Sea Level
125 Vrms @ 70,000 ft
Dielectric Withstand Voltage: 1500 Vrms
RF HiPot Withstand Voltage: 1000 Vrms
Corona Level: 375 Vrms Min.
Insulation Resistance: 5000 MegaOhms
Contact Resistance:
Center Conductor: 3.0 mOhms MAX
Outer Conductor: 2.0 mOhms MAX
Permeability: Less than 2.0 MU
RF Leakage: -90 dB min from 2-3 GHz.

MECHANICAL:

Mating Characteristics:
Interface per Mil-Std-348.
Force To Engage & Disengage:
Torque: 2 inch-lbs max.
Center Contact Retention:
Axial Force: 6 pounds min.
Connector Durability:
500 cycles min.
Coupling Proof Torque:
15 Inch-Pounds min.
Coupling Nut Retention force:
100 lbs min axial force

ENVIRONMENTAL:

Temperature Range: -65°C to +165°C.
Moisture Resistance:
Mil-Std-202, Method 106, Insulation reistance at least 200 MegOhms within 5 minutes after removal from humidity.
Corrosion:
Mil-Std-202, Method 101, Test Cond. B.
Vibration:
Mil-Std-202, Method 204, Test Cond. D.
Shock:
Mil-Std-202, Method 213, Test cond. I.

FINISH:

Center Conductor:
Gold Plate per ASTM B-488, over nickel plate per AMS-QQ-N-290.
Coupling Nut, Bodies & Press Ring:
(For CCSF): Passivated per ASTM A-967.
(For CC): Gold Plate per ASTM B-488, over nickel plate per AMS-QQ-N-290.

APPLICABLE TENSOLITE DOCUMENTS

WORK STD	PROD INST	ASSY INST
NA	NA	NA

NOTICE

THIS DRAWING EMBODIES A CONFIDENTIAL, PROPRIETARY DESIGN DEVELOPED BY TENSOLITE CORPORATION AND ALL RIGHTS, INCLUDING MANUFACTURE, REPRODUCTION, USE, AND SALE, INCLUDE REMAINING THE SAME, ARE EXPRESSLY RESERVED. IT IS SUBMITTED UNDER A CONFIDENTIAL RELATIONSHIP FOR A LIMITED PURPOSE AND THE RECIPIENT AGREES BY ACCEPTING THIS DRAWING NOT TO REPRODUCE ANY INFORMATION REGARDING IT TO ANY UNAUTHORIZED PERSON TO INCORPORATE IN OTHER PROJECTS ANY SPECIAL FEATURES REGARDING TO THIS DESIGN. ALL PATENT RIGHTS CONCERNED ARE EXPRESSLY RESERVED BY TENSOLITE CORPORATION, LONG BEACH, CALIFORNIA 90810.

TOLERANCES AND NOTES
EXCEPT AS NOTED
DIMENSIONS ARE IN INCHES.
LINEAR .XX ±.015 .XXX ±.005 ANGULAR ± 1/2°
FRACTION ± 1/32
1. MACHINE FINISH: 125 RMS
2. BREAK ALL SHARP EDGES .005 MAX.
3. MACHINED FILLETS .005 MAX.
4. MACHINED SURFACES PARALLEL TO REFERENCE AND WITHIN .005 INCHES PER INCH.
5. MACHINED DIAMETERS CONCENTRIC WITHIN .005 T.I.R.
6. DIMENSIONS TO BE MET BEFORE PLATING.
7. CHAMFER ALL THREADS 45°.
8. THREADS PER H-28
9. REMOVE PRINTED EDGES OR TEFLON.
10. REMOVE ALL BURRS.

–		–	–	–	–
MATERIAL		SIZE	FINISH/FIXTURE		FOOTPRINT
APPROVAL INITIALS		DATE	Tensolite	HIGH PERFORMANCE CABLES & INTERCONNECT SYSTEMS Long Beach, California 90815	
DRAWN BY	AGS	08.29.02			
CHECKED BY			TITLE	TNC MALE TO TNC FEMALE RADIUS R/A ADAPTER	
TEST ENGR					
QUALITY			SCALE 4:1	SIZE-DIRECTORY/FILENAME OL_\	SHEET 1 OF 1
DESIGN ENGR	DNg.	01.22.08	SIZE C	CAGE CODE 30990	DRAWING NO. 9050 REV. A
MFG ENGR					

ENG-DWG REV. B