CASE FINISH	CURRENT (AMPS)	WORKING VOLTAGE -55°C TO +85°C AC	WORKING VOLTAGE -55°C TO +85°C DC	WORKING VOLTAGE -55°C TO +125°C AC	WORKING VOLTAGE -55°C TO +125°C DC	MAXIMUM DC RESISTANCE (OHMS)	MAXIMUM VOLTAGE DROP DC	MAXIMUM VOLTAGE DROP AC	MINIMUM CAPACITANCE (uF)	MIN. INSERTION LOSS PER MIL-STD-220 FULL LOAD, +25°C 14 KHz	30 KHz	50 KHz	75 KHz	100 KHz	150 KHz	300 KHz	500 KHz	1 MHz	10 MHz	100 MHz	1 GHz	10 GHz
SOLDER	10	125@400Hz	250	125@400Hz	200	0.005	0.050	---	0.36	--	--	--	11	--	19	25	--	35	50	--	70	--

PART MARKING:

51-320-041
SCI DATE CODE

PACKAGE MARKING:

STANDARD

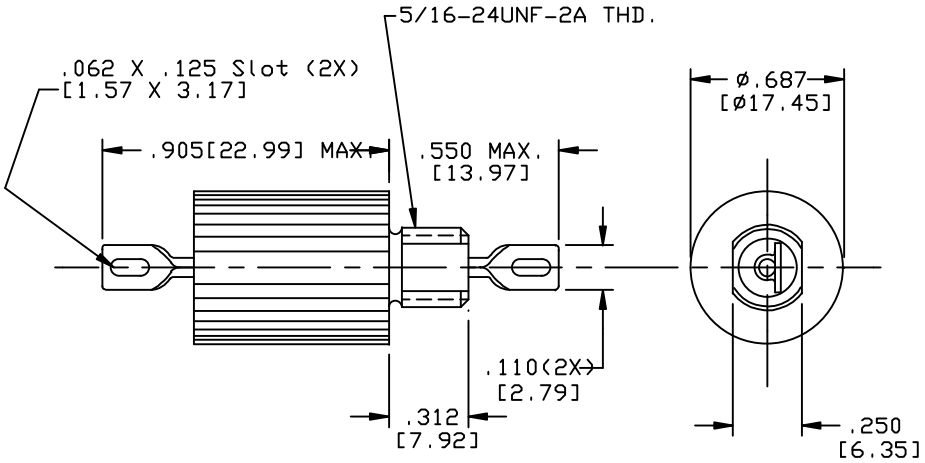

SCHEMATIC

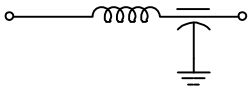

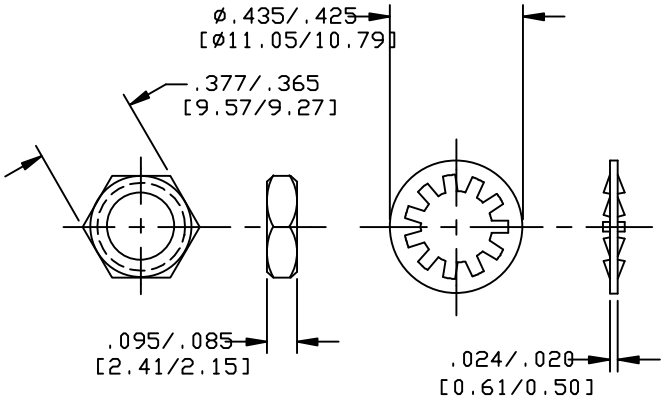

MTG. HARDWARE

MARKING NOTES:

N/A

NOTES:

1) MOUNTING TORQUE NOT TO EXCEED 7in-lbs.

CN. 178448	39	REV.	CHANGE NOTICE NO.

UNLESS OTHERWISE SPECIFIED DIMENSIONS ARE IN INCHES. [MILLIMETERS] DO NOT SCALE.

TOLERANCES UNLESS OTHERWISE SPECIFIED
Fractions
Dec. .xx±
Dec. .xxx±.010
Angles ±0° 30'

CODE IDENT. NO. OLSP2

SPECTRUM CONTROL INC.

ERIE, FAIRVIEW PENNSYLVANIA

Dwn KAUFFMAN
Ckd 2-17-97
Apvd.
Sheet 1 of 1

Description Low Pass EMI Filter

51-320-041

Quality Products From The Specialists In Electro-Magnetic Compatibility