SX1268 Reference Design:

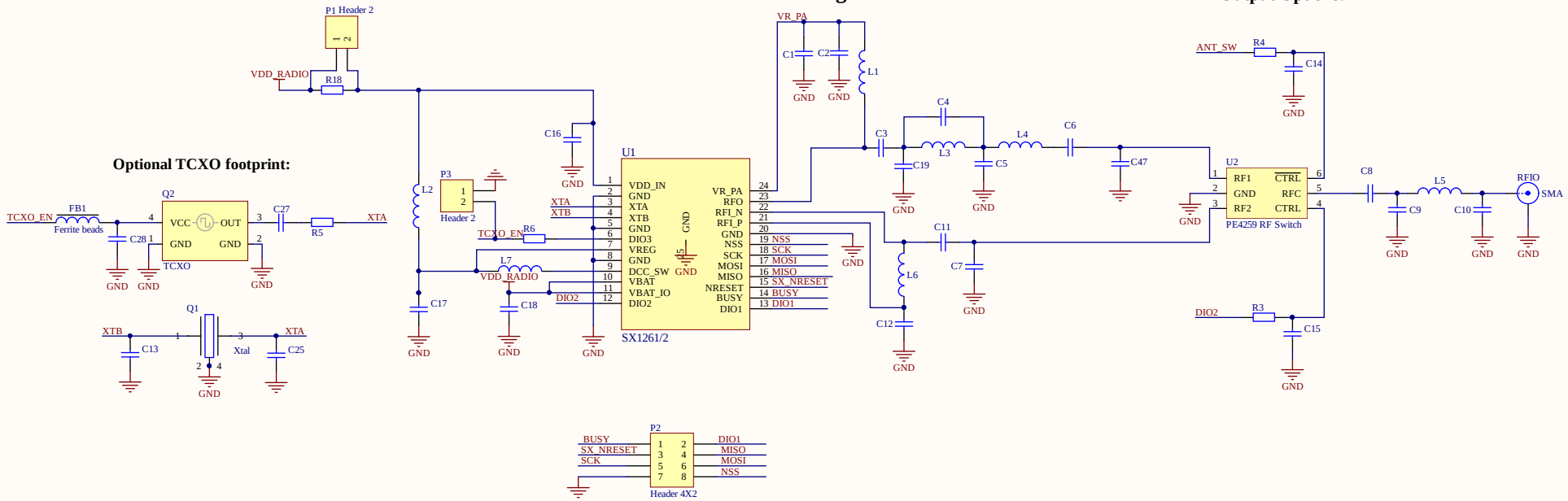

mbed compatible connectors:

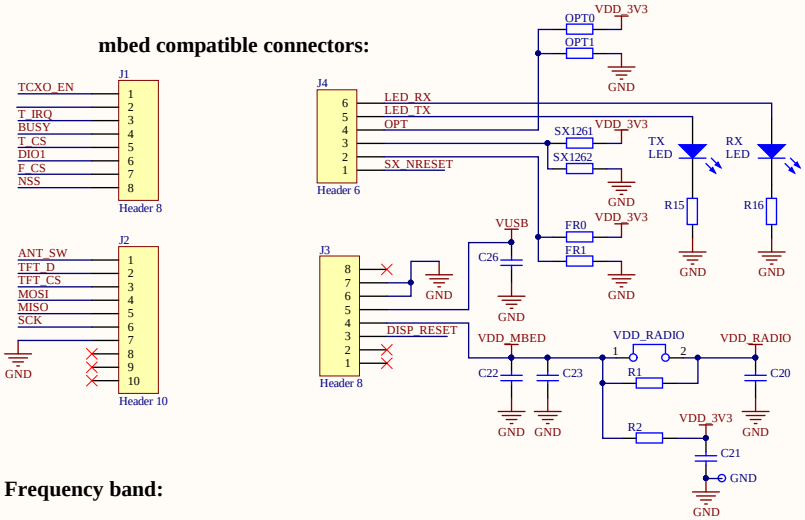

Display for mbed DM-TFT28-105 display connectors:

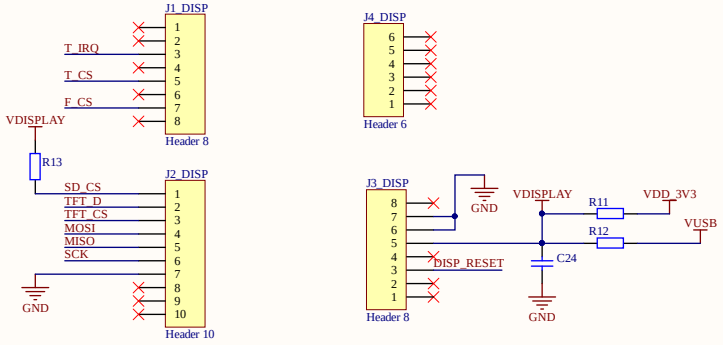

Frequency band:

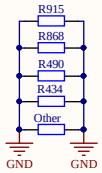

SX1261/2/8 Module configuration choice:

SX1268 : SX1261 = 12kohm SX1262 = 10kohm

Shield

Semtech Logos:

Title	SX1268 Evaluation Board - 2-Layers-1.0mm thickness	
Size: A3	Number: PCB_E512V01A - SEMTECH	Revision: V1a
Date: 6/27/2018		Sheet of 1/1
File: C:\Users\...\SX1268_E512V01A.SchDoc		Drawn By: EMr