P/N	INTERFACE	A
−1CC	DETENT	.105±.002
−2CC	NON−DETENT	.105±.002
−3CC	DETENT	.080±.002
−4CC	NON−DETENT	.080±.002

REVISIONS				
ZONE	REV	DESCRIPTION	DATE	BY
–	02	ADD −3CC & −4CC	04.08.11	DKN
–	03	CHANGE DIM A & .094 SQ.	04.08.11	DKN
–	–	INITIAL RELEASE	05.23.11	DKN

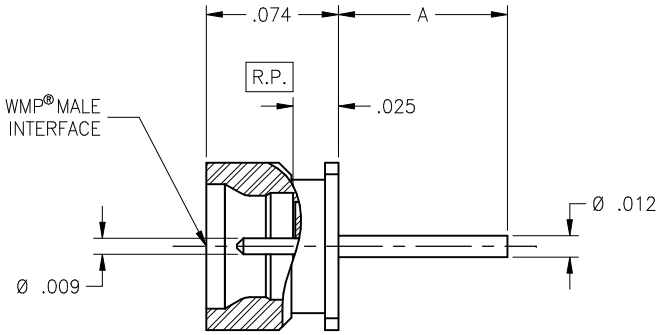

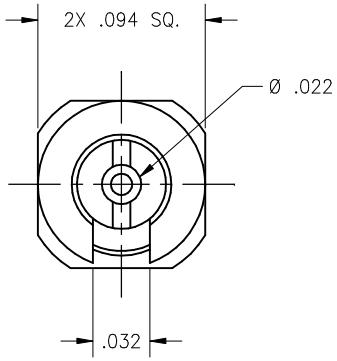

WMP® is registered trademark of CarlisleIT.

MATERIAL:

Body & Center Conductor:
Brass alloy C360 per ASTM B−16

Insulator:
Torlon per ASTM D−5204

ELECTRICAL:

Impedance: 50 Ohms Nom.
Freq. Range: DC TO 50 GHz
VSWR: 1.15:1 to 26.5 GHz. 1.25: to 50 GHz
Insertion Loss: $.12 \times \sqrt{f\ GHz}$
Working Voltage: 335 Vrms @ Sea Level
Dielectric Withstand Voltage: 500 V rms
RF HiPot Voltage: 325 Vrms Min @ 5MHz
Corona Level: 125 Vrms @ 70,000 ft
Insulation Resistance: 5000 Mohms
RF Leakage: −(65 − f GHz) dB
Contact Resistance:
Center conductor: 4.0 Milliohms
Outer conductor: 2.0 Milliohms

MECHANICAL:

Interface Dimensions:
Consult Factory
Connector Durability:
100 Cycles
Center Contact Retention:
N/A
Force to Engage and Disengage:
3.5 lbs Engage (Typical Detent)
5.0 lbs Disengage (Typical Detent)

ENVIRONMENTAL:

Temp. Range: −65°C to +165°C
Thermal Shock:
MIL−STD−202, Method 107, Test Cond. B
Moisture Resistance:
MIL−STD−202, Method 106. Insulation resistance at least 200 MegaOhms within 5 minutes after removal from humidity
Corrosion:
MIL−STD−202, Method 101, Test Cond. B
Vibration:
MIL−STD−202, Method 204, Test Cond. D
Shock:
MIL−STD−202, Method 213, Test Cond. I

FINISH:

Body & Center Conductor:
Gold plate per ASTM B−488 over nickel plate per AMS−QQ−N−290

APPLICABLE CARLISLE IT DOCUMENTS

WORK STD	PROD INST	ASSY INST
NA	NA	NA

NOTICE

THIS DRAWING EMBODIES A CONFIDENTIAL PROPRIETARY DESIGN ORIGINATED BY CARLISLE INTERCONNECT TECHNOLOGIES AND ALL DESIGN, MANUFACTURING, REPRODUCTION, USE AND SALE RIGHTS REGARDING THE SAME ARE EXPRESSLY RESERVED. IT IS SUBMITTED UNDER A CONFIDENTIAL RELATIONSHIP FOR A SPECIFIED PURPOSE AND THE RECIPIENT AGREES BY ACCEPTING THIS DRAWING NOT TO SUPPLY OR DISCLOSE ANY INFORMATION REGARDING IT TO ANY UNAUTHORIZED PERSON TO INCORPORATE INOTHER PROJECTS ANY SPECIAL FEATURE PECULIAR TO THIS DESIGN. ALL PATENT RIGHTS HERETO ARE EXPRESSLY RESERVED BY CARLISLE INTERCONNECT TECHNOLOGIES, LONG BEACH, CA 90815

TOLERANCES AND NOTES EXCEPT AS NOTED

DIMENSIONS ARE IN INCHES.
LINEAR .XX ±.015 .XXX ±.005 ANGULAR ± 1/2°
FRACTION ± 1/32

1. MACHINE FINISH: 63 RMS
2. BREAK ALL SHARP EDGES .003 MAX.
3. MACHINED FILLETS .005 MAX.
4. MACHINED SURFACES SQUARE TO RESPECTIVE AXIS WITHIN .005 INCHES PER INCH.
5. MACHINED DIAMETERS CONCENTRIC WITHIN .002 T.I.R.
6. DIMENSIONS TO BE MET BEFORE PLATING.
7. CHAMFER ALL THREADS 45°.
8. THREADS PER H−28.
9. REMOVE FRAYED EDGES ON TEFLON.
10. REMOVE ALL BURRS.

MATERIAL	SIZE	SPECIFICATION	PROCUREMENT
–	–	–	–

APPROVAL INITIALS		DATE
DRAWN BY	DKN	04.05.11
CHECKED BY		
TEST ENGG		
QUALITY		
DESIGN ENGG		
MFG ENGG		

CARLISLE Interconnect Technologies
Cerritos, CA 90703

TITLE: WMP® MALE STRAIGHT SURFACE MOUNT

SCALE: 20:1 | SUB−DIRECTORY\FILENAME: OL_ | SHEET 1 OF 1

SIZE: C | CAGE CODE: 30990 | DRAWING NO.: WP305 | REV.: –

ENG−DWG REV. C