Qualcomm

RF360
Europe GmbH

SAW components

SAW duplexer

Small cell & femtocell
LTE band 12

Series/type:	B8012
Ordering code:	B39741B8012P810

Date:	January 18, 2018
Version:	2.1

RF360 products mentioned within this document are products of RF360 Europe GmbH and other subsidiaries of RF360 Holdings Singapore Pte. Ltd. (collectively, the “RF360 Subsidiaries”).

RF360 Europe GmbH, Anzinger Str. 13, München, Germany

© 2019 RF360 Europe GmbH and/or its affiliated companies. All rights reserved.

These materials, including the information contained herein, may be used only for informational purposes by the customer. The RF360 Subsidiaries assume no responsibility for errors or omissions in these materials or the information contained herein. The RF360 Subsidiaries reserve the right to make changes to the product(s) or information contained herein without notice. The materials and information are provided on an AS IS basis, and the RF360 Subsidiaries assume no liability and make no warranty or representation, either expressed or implied, with respect to the materials, or any output or results based on the use, application, or evaluation of such materials, including, without limitation, with respect to the non-infringement of trademarks, patents, copyrights or any other intellectual property rights or other rights of third parties.

No use of this documentation or any information contained herein grants any license, whether express, implied, by estoppel or otherwise, to any intellectual property rights, including, without limitation, to any patents owned by QUALCOMM Incorporated or any of its subsidiaries.

Not to be used, copied, reproduced, or modified in whole or in part, nor its contents revealed in any manner to others without the express written permission of RF360 Europe GmbH.

Qualcomm is a trademark of Qualcomm Incorporated, registered in the United States and other countries. Other product and brand names may be trademarks or registered trademarks of their respective owners.

This technical data may be subject to U.S. and international export, re-export, or transfer (“export”) laws. Diversion contrary to U.S. and international law is strictly prohibited.

RF360 Europe GmbH

A Qualcomm – TDK Joint Venture

SAW components

SAW duplexer

Small cell & femtocell
LTE band 12

Series/type:	B8012
Ordering code:	B39741B8012P810

Date:	January 18, 2018
Version:	2.1

RF360 products mentioned within this document are offered by RF360 Europe GmbH and other subsidiaries of RF360 Holdings Singapore Pte. Ltd. (collectively, the “RF360 Subsidiaries”).

RF360 Holdings Singapore Pte. Ltd. is a joint venture of Qualcomm Global Trading Pte. Ltd. and EPCOS AG.

RF360 Europe GmbH, Anzinger Str. 13, München, Germany

© 2018 RF360 Europe GmbH and/or its affiliated companies. All rights reserved.

These materials, including the information contained herein, may be used only for informational purposes by the customer. The RF360 Subsidiaries assume no responsibility for errors or omissions in these materials or the information contained herein. The RF360 Subsidiaries reserve the right to make changes to the product(s) or information contained herein without notice. The materials and information are provided on an AS IS basis, and the RF360 Subsidiaries assume no liability and make no warranty or representation, either expressed or implied, with respect to the materials, or any output or results based on the use, application, or evaluation of such materials, including, without limitation, with respect to the non-infringement of trademarks, patents, copyrights or any other intellectual property rights or other rights of third parties.

No use of this documentation or any information contained herein grants any license, whether express, implied, by estoppel or otherwise, to any intellectual property rights, including, without limitation, to any patents owned by QUALCOMM Incorporated or any of its subsidiaries.

Not to be used, copied, reproduced, or modified in whole or in part, nor its contents revealed in any manner to others without the express written permission of RF360 Europe GmbH.

Qualcomm and Qualcomm RF360 are trademarks of Qualcomm Incorporated, registered in the United States and other countries. RF360 is a trademark of Qualcomm Incorporated. Other product and brand names may be trademarks or registered trademarks of their respective owners.

This technical data may be subject to U.S. and international export, re-export, or transfer (“export”) laws. Diversion contrary to U.S. and international law is strictly prohibited.

Table of contents

1 Application....4
2 Features....4
3 Package....5
4 Pin configuration....5
5 Matching circuit....6
6 Characteristics....7
7 Maximum ratings....11
8 Transmission coefficients....12
9 Reflection coefficients....15
10 EVMs....16
11 Packing material....18
12 Marking....22
13 Soldering profile....23
14 Annotations....24
15 Cautions and warnings....25
Important notes....26

1 Application

- Low-loss SAW duplexer for LTE small cell & femtocell systems (Band 12)
- Usable pass band 17 MHz
- Low insertion attenuation
- Low amplitude ripple
- Rx = uplink = 699 – 716 MHz
- Tx = downlink = 729 – 746 MHz

2 Features

- Industrial grade qualified family
- Package size 2.5±0.1 mm × 2.0±0.1 mm
- Package height 0.5 mm (max.)
- Approximate weight 0.01 g
- RoHS compatible
- Package for Surface Mount Technology (SMT)
- Ni/Au-plated terminals
- Electrostatic Sensitive Device (ESD)
- Moisture Sensitivity Level 2a (MSL2a)

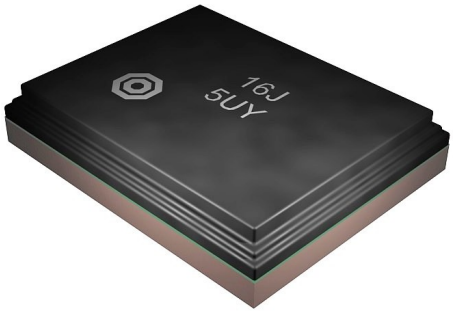

Figure 1: Picture of component with example of product marking.

3 Package

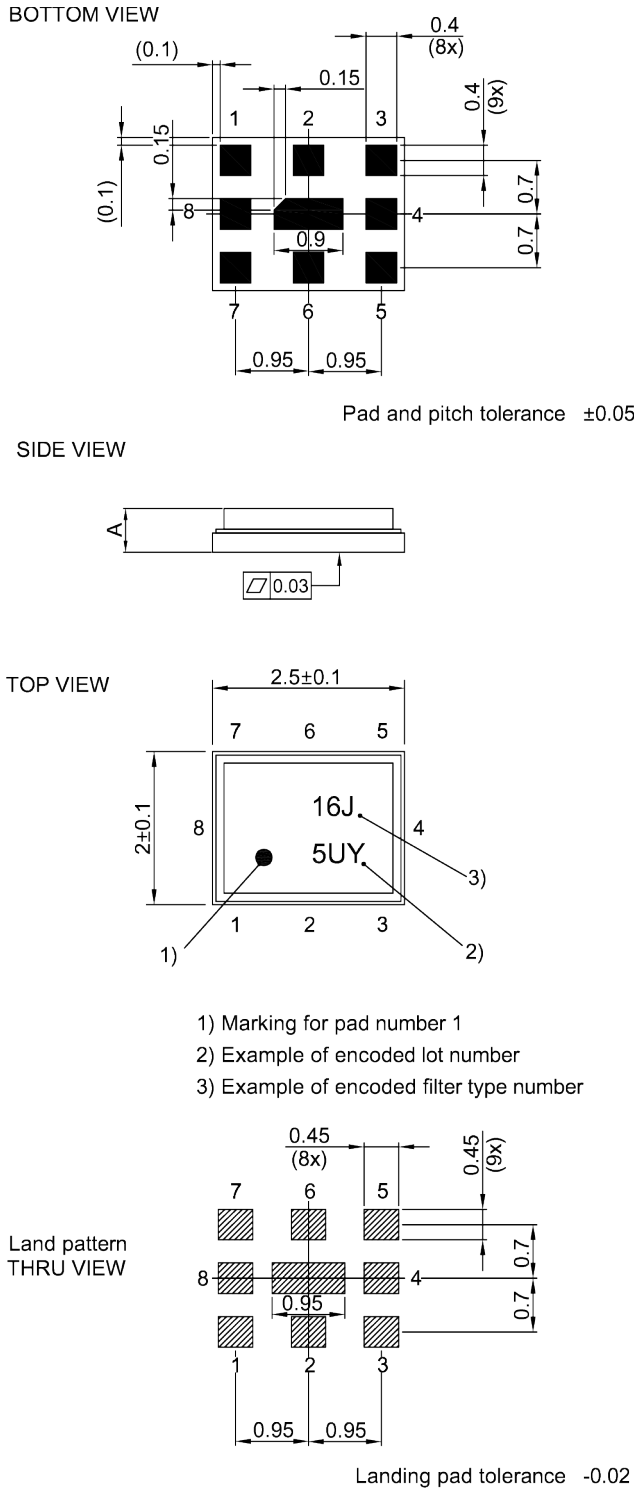

Figure 2: Drawing of package with package height A = 0.5 mm (max.). See Sec. Package information (p. 25).

4 Pin configuration

- 1 TX
- 3 RX
- 6 ANT
- 2, 4, 5, 7, 8, 9 Ground

5 Matching circuit

- L_{p6} = 17 nH

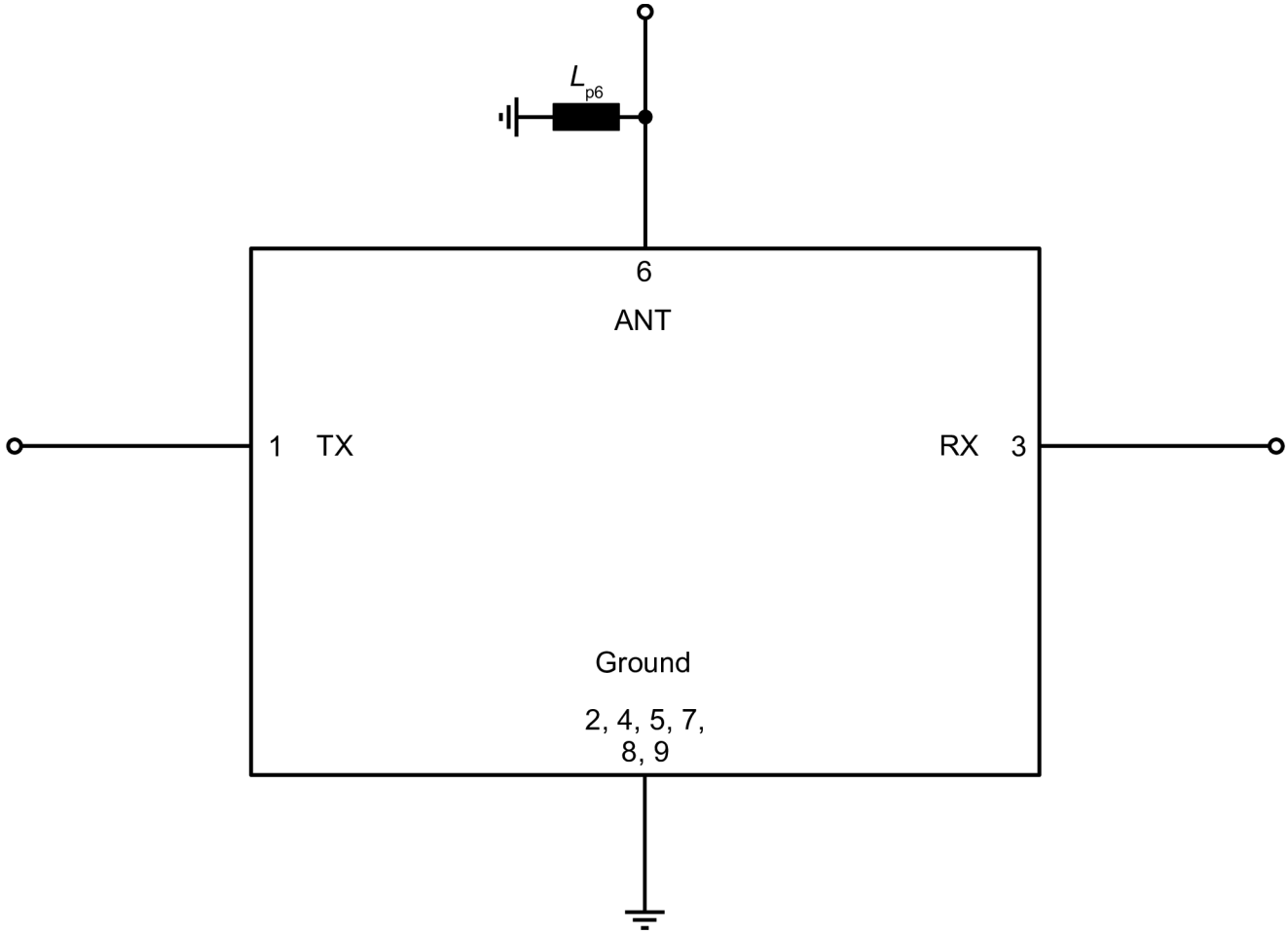

Figure 3: Schematic of matching circuit.

6 Characteristics

6.1 TX – ANT

Temperature range for specification	T_{SPEC}	= −10 °C ... +85 °C
TX terminating impedance	Z_{TX}	= 50 Ω
ANT terminating impedance	Z_{ANT}	= 50 Ω with par. 17 nH[1)]
RX terminating impedance	Z_{RX}	= 50 Ω

Characteristics TX – ANT				min. for T_{SPEC}	typ. @ +25 °C	max. for T_{SPEC}	
Center frequency			f_C	—	737.5	—	MHz
Maximum insertion attenuation			α_{max}				
	729... 746	MHz		—	1.8	2.5	dB
Amplitude ripple (p-p)			$\Delta\alpha$				
	729... 746	MHz		—	0.6	1.3	dB
Maximum VSWR			$VSWR_{max}$				
@ TX port	729... 746	MHz		—	1.8	2.0	
@ ANT port	729... 746	MHz		—	1.6	2.0	
Maximum error vector magnitude			EVM_{max} [2)]				
	731.5... 743.5	MHz		—	2.5	4.0	%
Minimum attenuation			α_{min}				
	10... 699	MHz		30	42	—	dB
	699... 716	MHz		45	51	—	dB
	777... 787	MHz		35	48	—	dB
	788... 798	MHz		35	45	—	dB
	824... 849	MHz		35	41	—	dB
	869... 894	MHz		35	40	—	dB
	1398... 1432	MHz		35	45	—	dB
	1458... 1492	MHz		35	46	—	dB
	1574... 1606	MHz		35	47	—	dB
	1710... 1755	MHz		35	49	—	dB
	1850... 1915	MHz		40	49	—	dB
	1930... 1995	MHz		40	49	—	dB
	2097... 2148	MHz		30	46	—	dB
	2110... 2170	MHz		30	46	—	dB
	2187... 2238	MHz		30	44	—	dB
	2400... 2500	MHz		35	42	—	dB

1) See Sec. Matching circuit (p. 6).
2) Error Vector Magnitude (EVM) based on definition in 3GPP TS 25.141.

6.2 ANT – RX

Temperature range for specification	T_{SPEC}	= −10 °C ... +85 °C
TX terminating impedance	Z_{TX}	= 50 Ω
ANT terminating impedance	Z_{ANT}	= 50 Ω with par. 17 nH[1)]
RX terminating impedance	Z_{RX}	= 50 Ω

Characteristics ANT – RX				min. for T_{SPEC}	typ. @ +25 °C	max. for T_{SPEC}	
Center frequency			f_C	—	707.5	—	MHz
Maximum insertion attenuation			α_{max}				
	699... 714.75	MHz		—	2.3	3.0	dB
	714.75... 716	MHz		—	2.4	4.5	dB
Amplitude ripple (p-p)			$\Delta\alpha$				
	699... 714.75	MHz		—	0.9	2.0	dB
	699... 716	MHz		—	1.0	3.0	dB
Maximum VSWR			$VSWR_{max}$				
@ ANT port	699... 716	MHz		—	1.8	2.2	
@ RX port	699... 716	MHz		—	2.0	2.3	
Maximum error vector magnitude			EVM_{max} [2)]				
	701.5... 713.5	MHz		—	2.2	5.0	%
Minimum attenuation			α_{min}				
	100... 600	MHz		45	58	—	dB
	693.25... 694	MHz		12	15	—	dB
	694... 694.5	MHz		5	23	—	dB
	694.5... 697.75	MHz		1.5	2.5	—	dB
	716... 721	MHz		1	2.3	—	dB
	721... 722.5	MHz		5	13	—	dB
	722.5... 728	MHz		10	19	—	dB
	729... 746	MHz		45	50	—	dB
	746... 756	MHz		42	48	—	dB
	758... 768	MHz		45	49	—	dB
	777... 787	MHz		45	50	—	dB
	788... 798	MHz		45	52	—	dB
	869... 894	MHz		45	54	—	dB
	1398... 1432	MHz		45	56	—	dB
	1574... 1606	MHz		45	54	—	dB
	1710... 1755	MHz		45	53	—	dB
	1850... 1915	MHz		40	51	—	dB
	1930... 1995	MHz		40	50	—	dB
	2110... 2170	MHz		30	44	—	dB
	2400... 2500	MHz		40	50	—	dB

1) See Sec. Matching circuit (p. 6).

2) Error Vector Magnitude (EVM) based on definition in 3GPP TS 25.141.

6.3 TX – RX

Temperature range for specification	T_{SPEC}	= −10 °C ... +85 °C
TX terminating impedance	Z_{TX}	= 50 Ω
ANT terminating impedance	Z_{ANT}	= 50 Ω with par. 17 nH[1)]
RX terminating impedance	Z_{RX}	= 50 Ω

Characteristics TX – RX			min. for T_{SPEC}	typ. @ +25 °C	max. for T_{SPEC}	
Minimum isolation		α_{min}				
	699... 716	MHz	48	52	—	dB
	729... 746	MHz	48	52	—	dB

1) See Sec. Matching circuit (p. 6).

7 Maximum ratings

Operable temperature	T_{OP} = −40 °C ... +95 °C	
Storage temperature	T_{STG} [1] = −40 °C ... +95 °C	
DC voltage	$\|V_{DC}\|$ [2] = 0 V	
ESD voltage		
	V_{ESD} [3] = 50 V	Machine model.
	V_{ESD} [4] = 100 V	Human body model.
Input power	P_{IN}	
@ TX port: 729 ... 746 MHz	31 dBm[5]	5 MHz LTE downlink signal (25 RB) for 50000 h @ 55 °C. P_{IN} 31 dBm average – 42 dBm peak. Source and load impedance 50Ω.
@ TX port: other frequency ranges	10 dBm	Source and load impedance 50Ω.

[1] Not valid for packaging material. Storage temperature for packaging material is −25 °C to +40 °C.
[2] In case of applied DC voltage blocking capacitors are mandatory.
[3] According to JESD22-A115B (MM – Machine Model), 10 negative & 10 positive pulses.
[4] According to JESD22-A114F (HBM – Human Body Model), 1 negative & 1 positive pulse.
[5] Expected lifetime according to power durability tests, and wear out models.

8 Transmission coefficients

8.1 TX – ANT

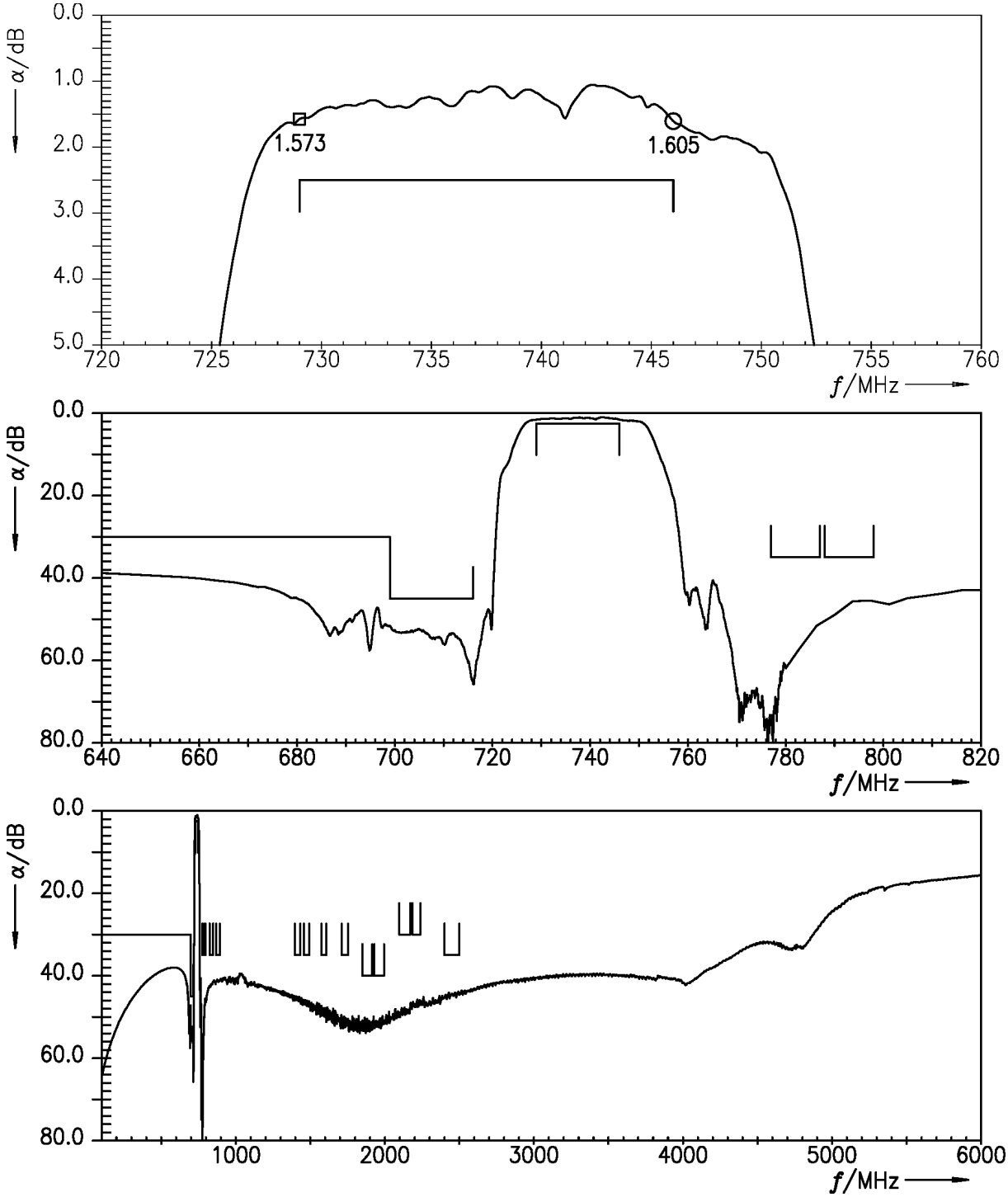

Figure 4: Attenuation TX – ANT.

8.2 ANT – RX

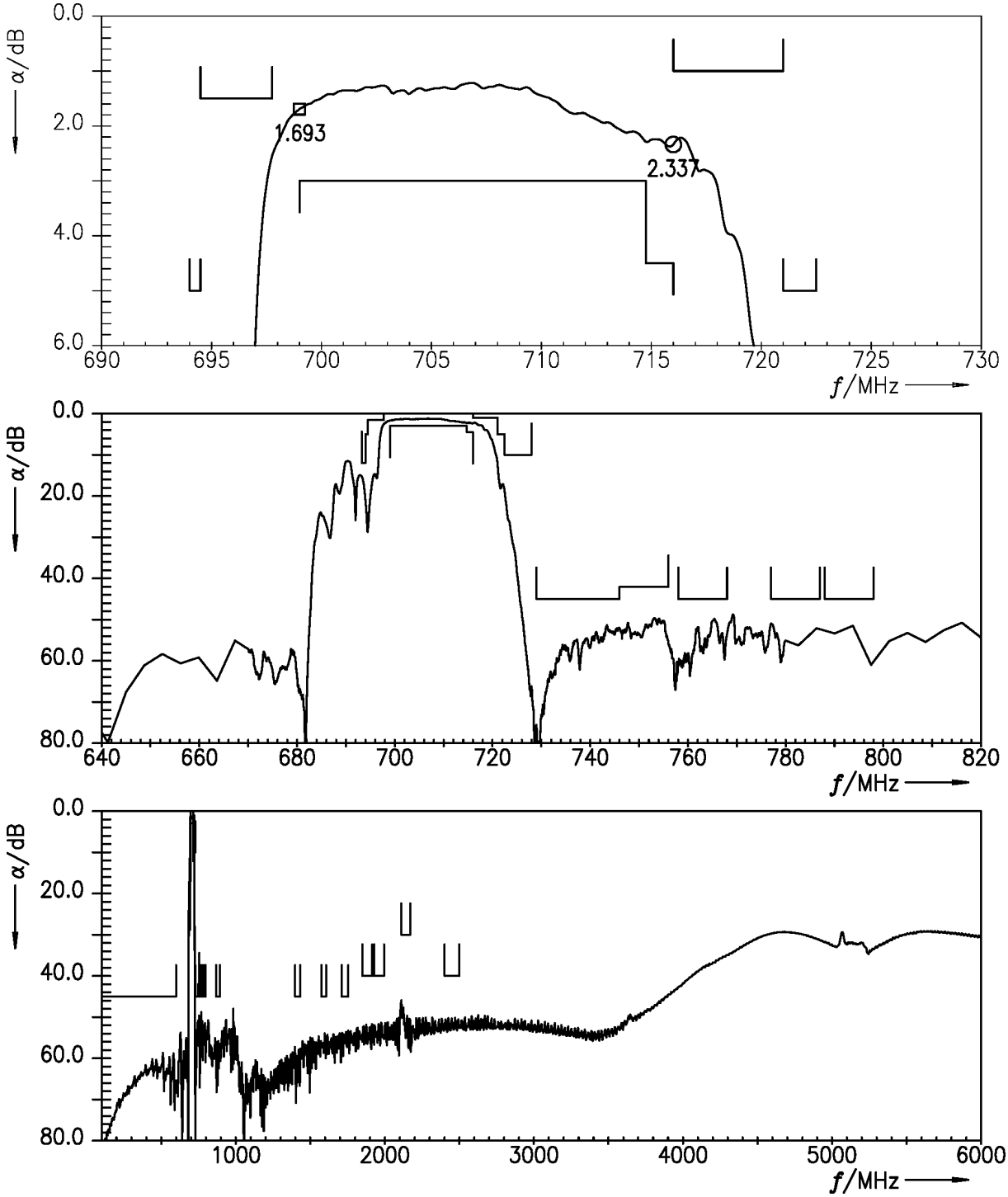

Figure 5: Attenuation ANT – RX.

8.3 TX – RX

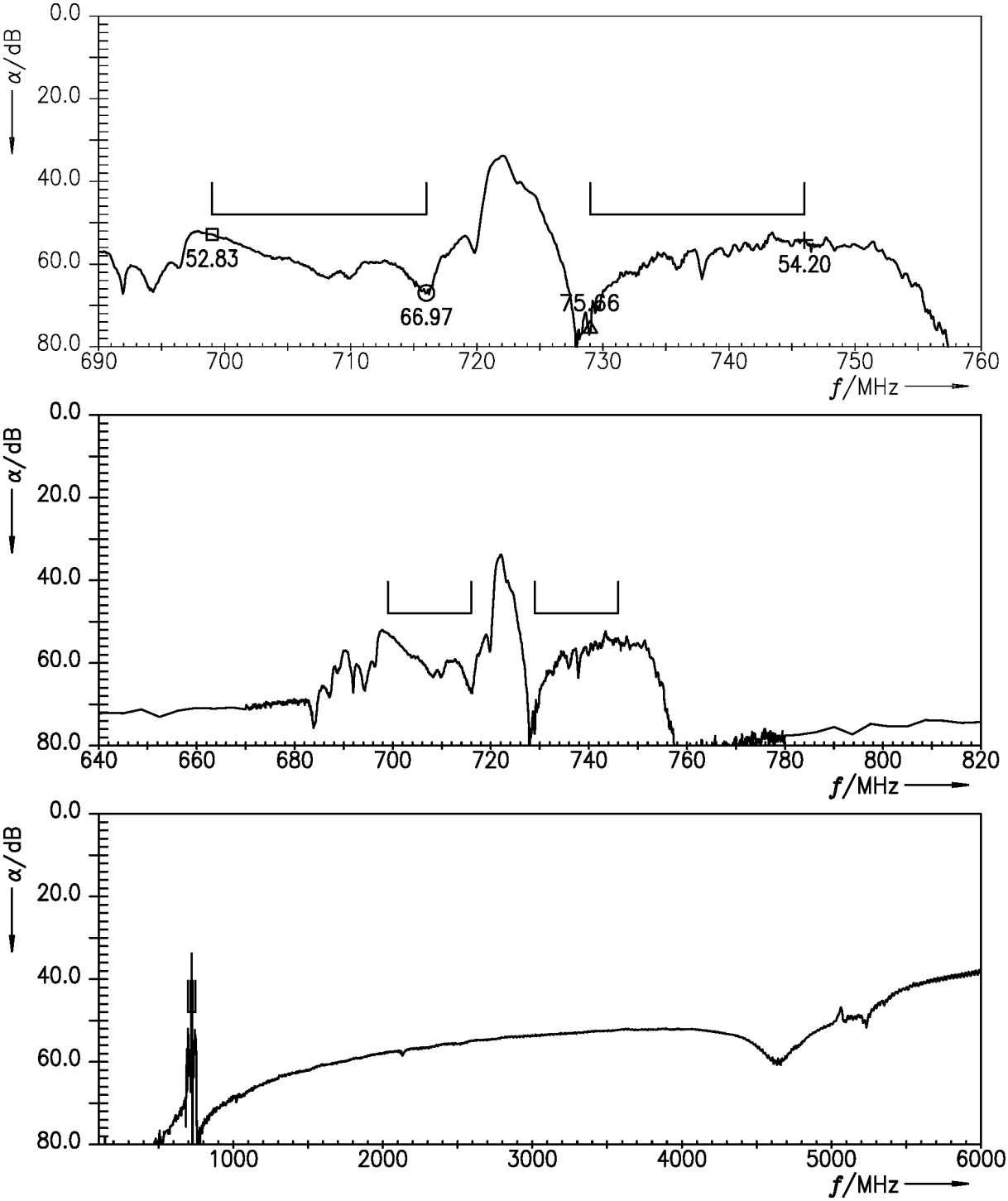

Figure 6: Isolation TX – RX.

9 Reflection coefficients

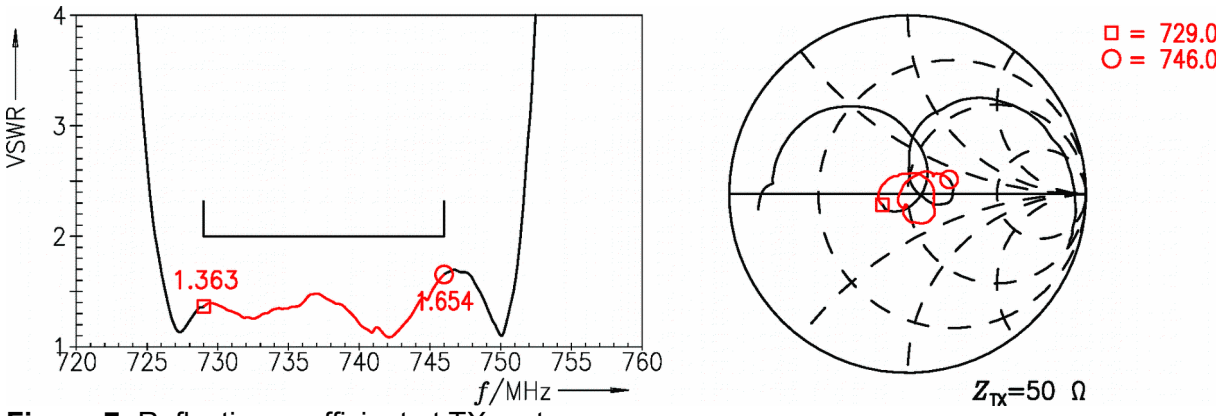

Figure 7: Reflection coefficient at TX port.

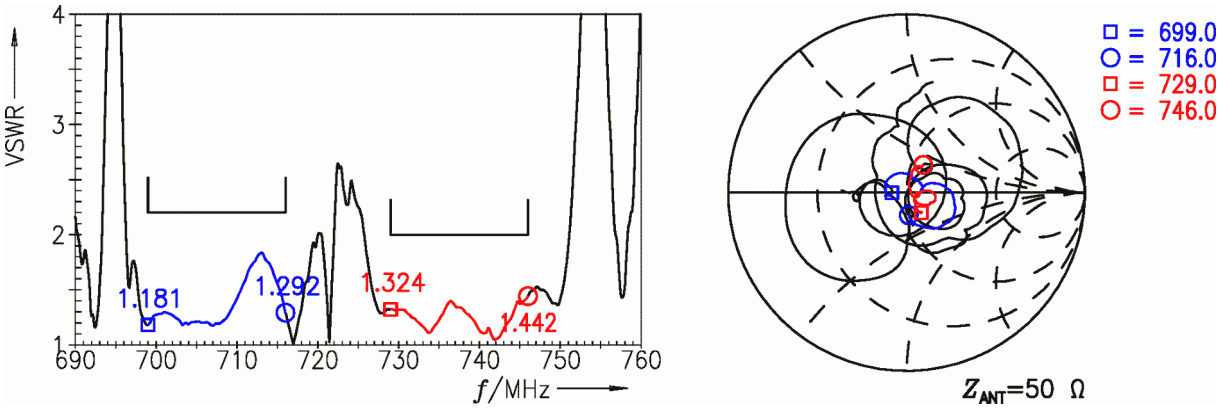

Figure 8: Reflection coefficient at ANT port.

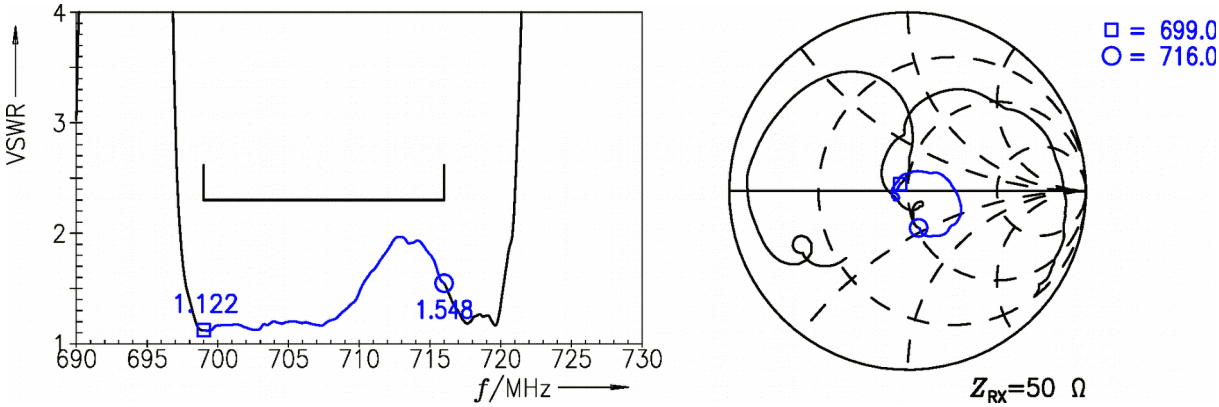

Figure 9: Reflection coefficient at RX port.

10 EVMs

10.1 TX – ANT

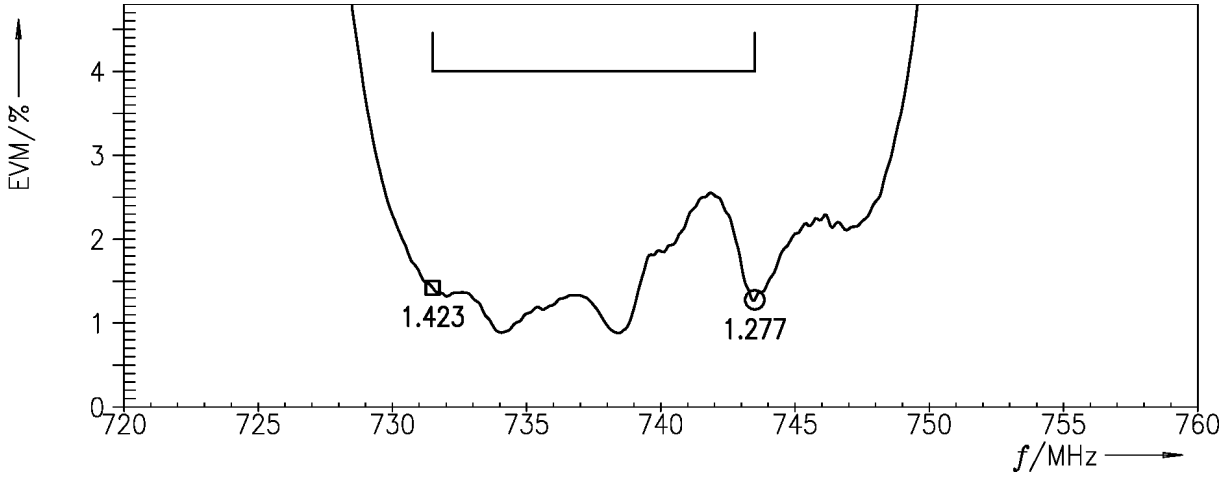

Figure 10: Error vector magnitude TX – ANT.

10.2 ANT – RX

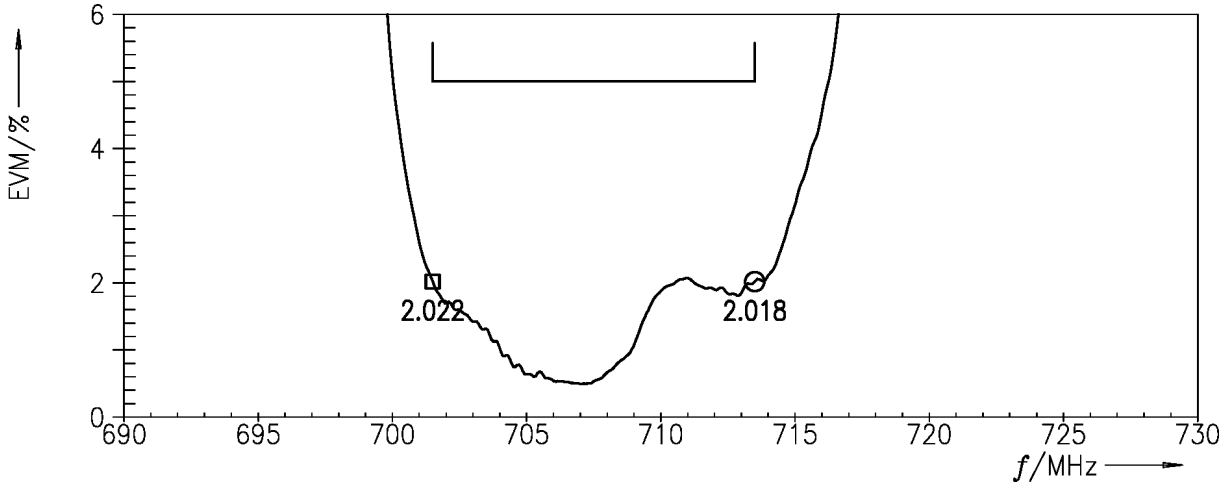

Figure 11: Error vector magnitude ANT – RX.

11 Packing material

11.1 Tape

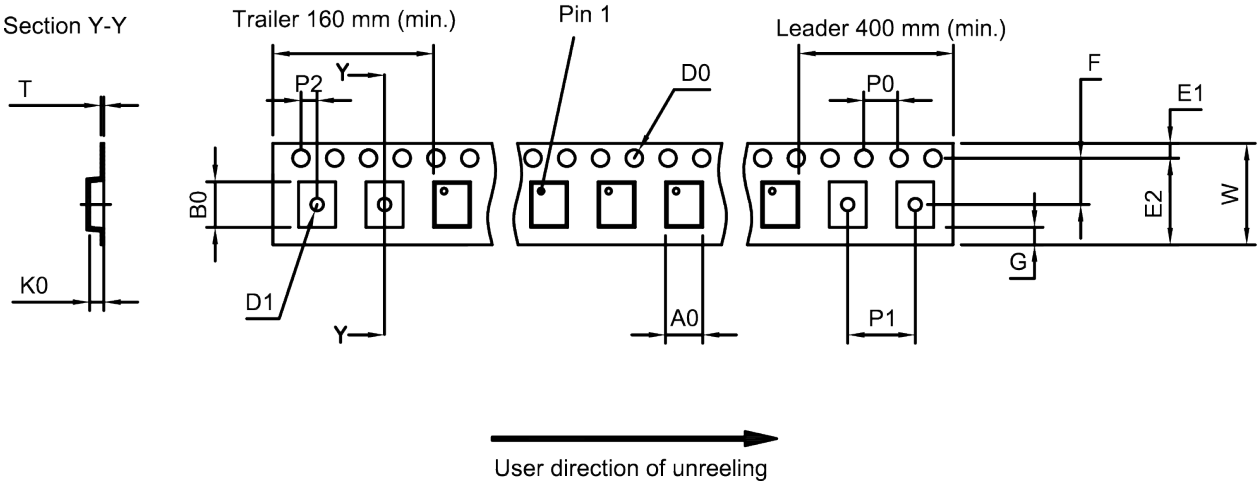

Figure 12: Drawing of tape (first-angle projection) with tape dimensions according to Table 1.

A_0	$2.25_{\pm 0.05}$ mm
B_0	$2.75_{\pm 0.05}$ mm
D_0	$1.5_{+0.1/-0}$ mm
D_1	1.0 mm (min.)
E_1	$1.75_{\pm 0.1}$ mm

E_2	6.25 mm (min.)
F	$3.5_{\pm 0.05}$ mm
G	0.75 mm (min.)
K_0	$0.6_{\pm 0.05}$ mm
P_0	$4.0_{\pm 0.1}$ mm

P_1	$4.0_{\pm 0.1}$ mm
P_2	$2.0_{\pm 0.05}$ mm
T	$0.25_{\pm 0.03}$ mm
W	$8.0_{+0.3/-0.1}$ mm

Table 1: Tape dimensions.

11.2 Reel with diameter of 180 mm

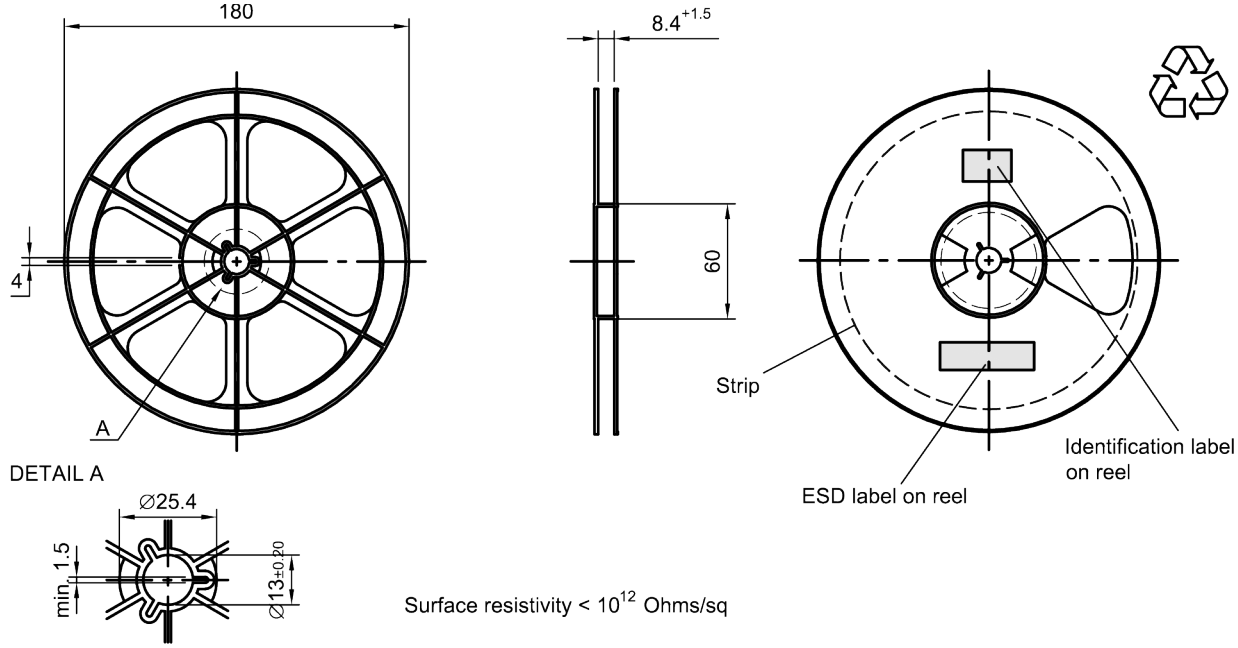

Figure 13: Drawing of reel (first-angle projection) with diameter of 180 mm.

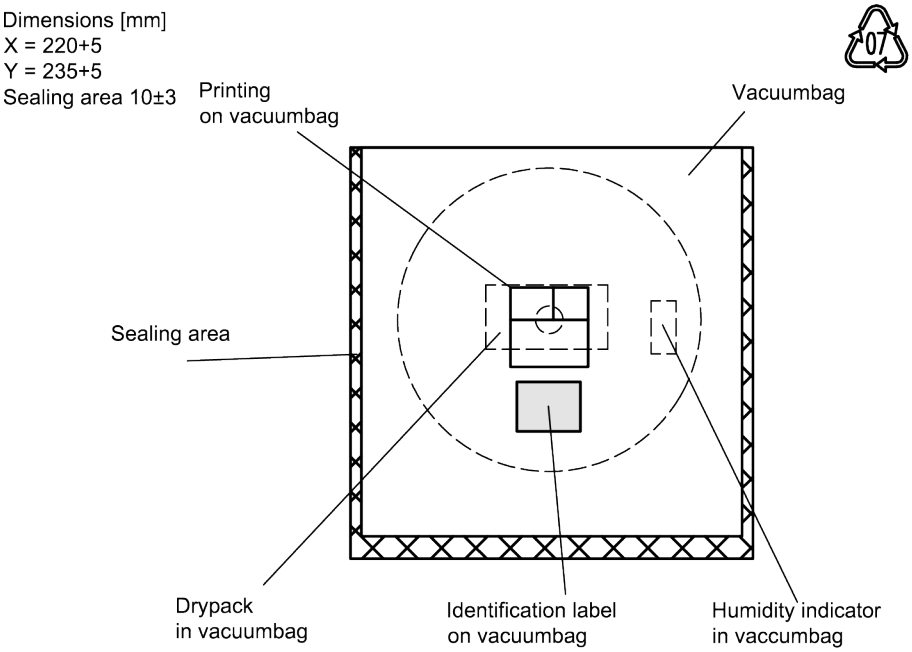

Figure 14: Drawing of moisture barrier bag (MBB) for reel with diameter of 180 mm.

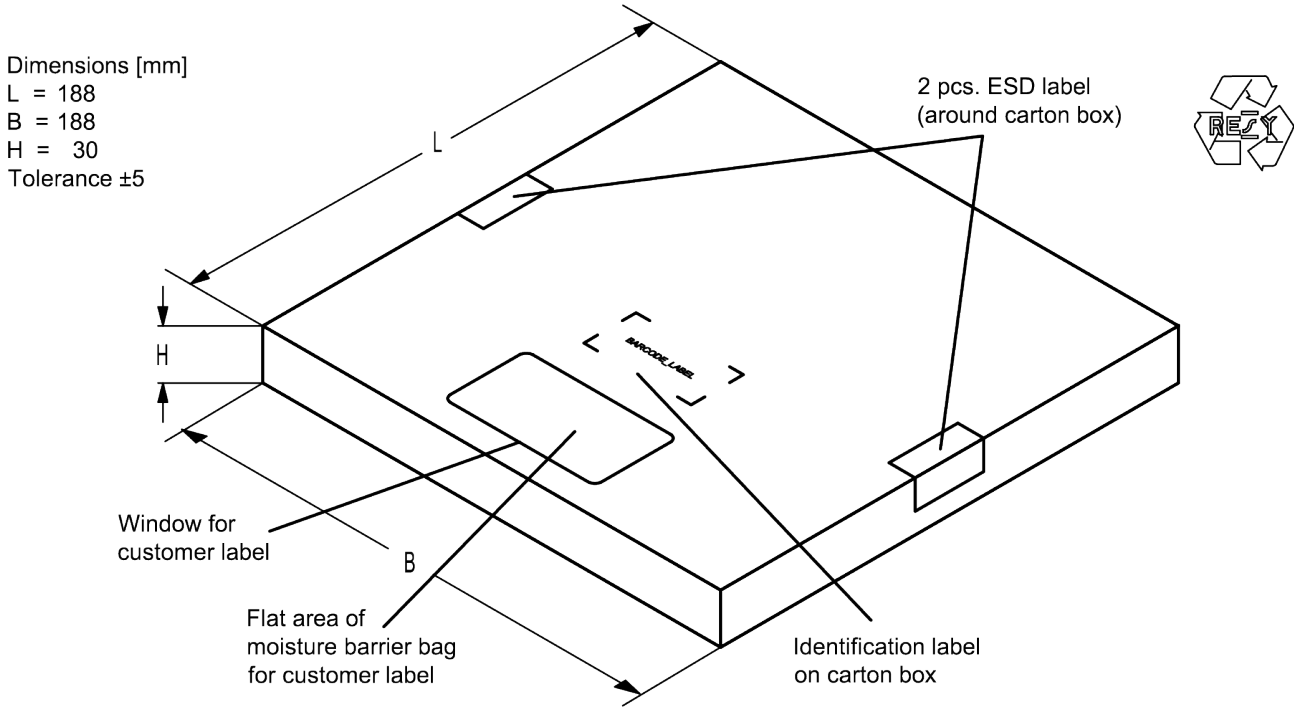

Figure 15: Drawing of folding box for reel with diameter of 180 mm.

11.3 Reel with diameter of 330 mm

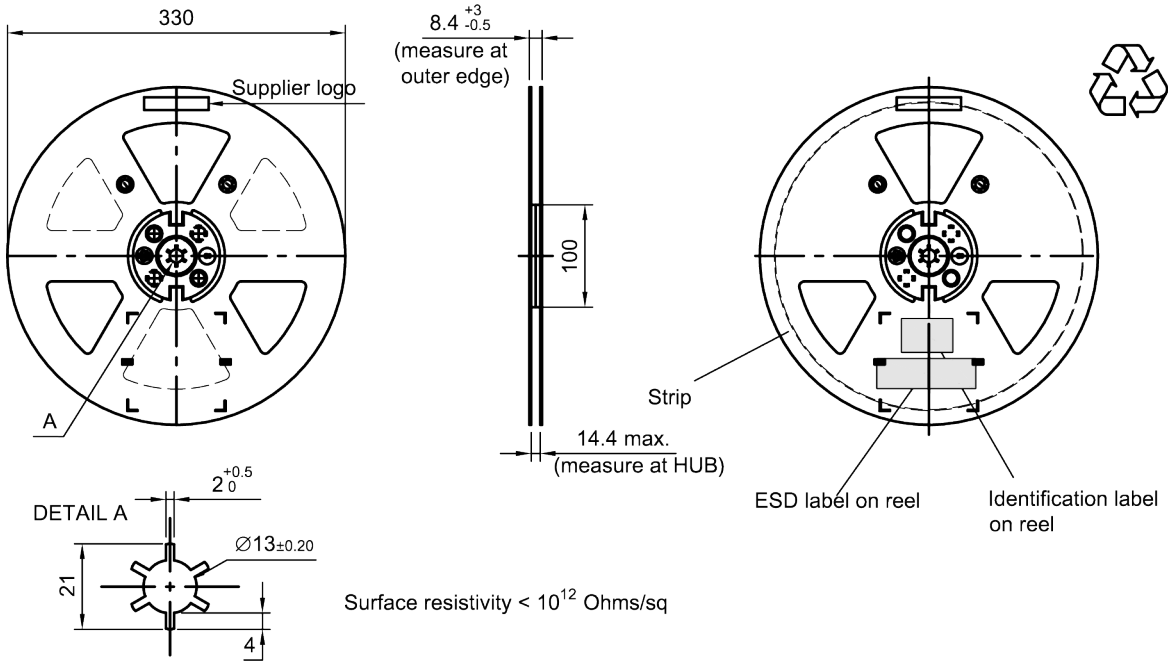

Figure 16: Drawing of reel (first-angle projection) with diameter of 330 mm.

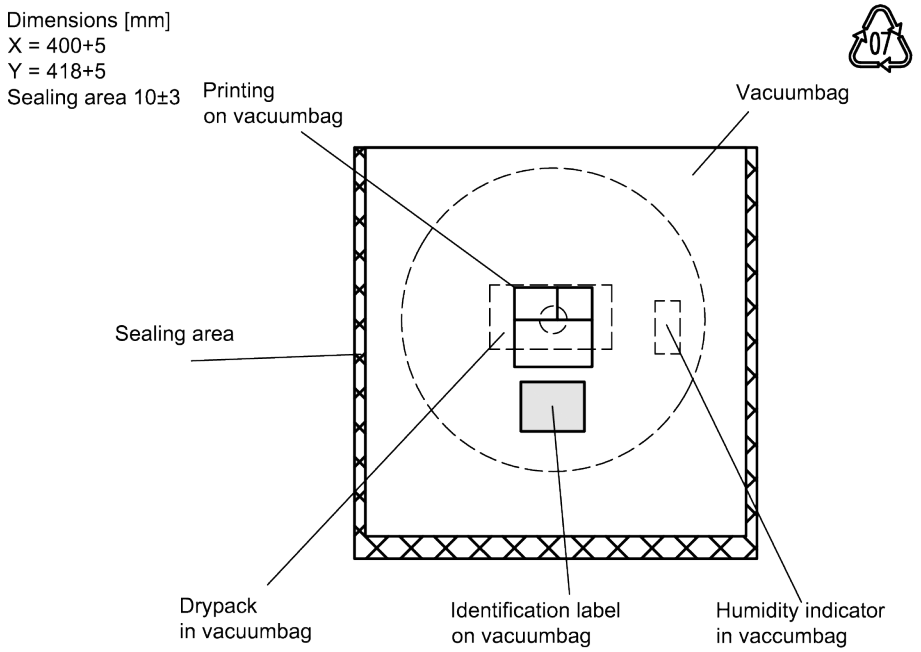

Figure 17: Drawing of moisture barrier bag (MBB) for reel with diameter of 330 mm.

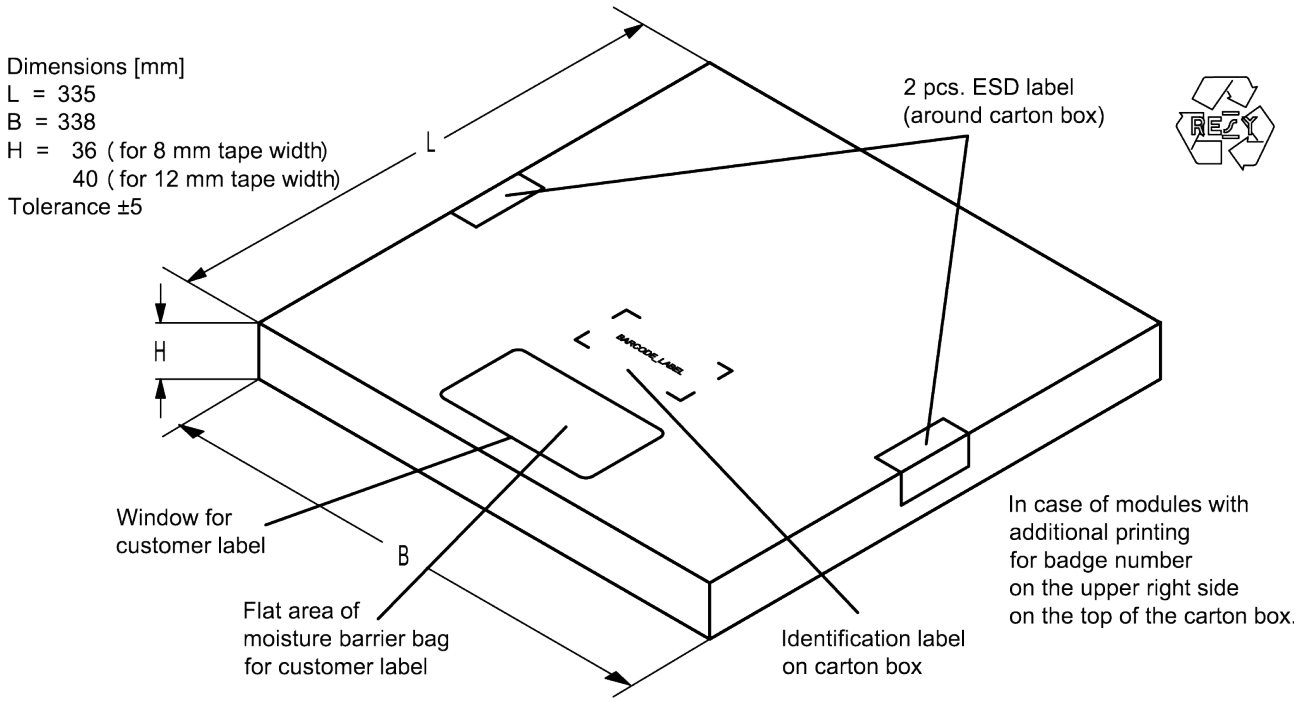

Figure 18: Drawing of folding box for reel with diameter of 330 mm.

12 Marking

Products are marked with product type number and lot number encoded according to Table 2:

- Type number:

  The 4 digit type number of the ordering code, e.g., B3xxxxB**1234**xxxx,
  is encoded by a special BASE32 code into a 3 digit marking.

  Example of decoding type number marking on device in decimal code.
  16J => **1234**
  1 x 32^2 + **6** x 32^1 + **18 (=J)** x 32^0 = **1234**
  The BASE32 code for product type B8012 is 7TC.

- Lot number:

  The last 5 digits of the lot number, e.g., **12345**,
  are encoded based on a special BASE47 code into a 3 digit marking.

  Example of decoding lot number marking on device in decimal code.
  5UY => **12345**
  5 x 47^2 + **27 (=U)** x 47^1 + **31 (=Y)** x 47^0 = **12345**

Adopted BASE32 code for type number			
Decimal value	Base32 code	Decimal value	Base32 code
0	0	16	G
1	1	17	H
2	2	18	J
3	3	19	K
4	4	20	M
5	5	21	N
6	6	22	P
7	7	23	Q
8	8	24	R
9	9	25	S
10	A	26	T
11	B	27	V
12	C	28	W
13	D	29	X
14	E	30	Y
15	F	31	Z

Adopted BASE47 code for lot number			
Decimal value	Base47 code	Decimal value	Base47 code
0	0	24	R
1	1	25	S
2	2	26	T
3	3	27	U
4	4	28	V
5	5	29	W
6	6	30	X
7	7	31	Y
8	8	32	Z
9	9	33	b
10	A	34	d
11	B	35	f
12	C	36	h
13	D	37	n
14	E	38	r
15	F	39	t
16	G	40	v
17	H	41	\
18	J	42	?
19	K	43	{
20	L	44	}
21	M	45	<
22	N	46	>
23	P		

Table 2: Lists for encoding and decoding of marking.

13 Soldering profile

The recommended soldering process is in accordance with IEC 60068-2-58 – 3rd edit and IPC/JEDEC J-STD-020B.

ramp rate	≤ 3 K/s
preheat	125 °C to 220 °C, 150 s to 210 s, 0.4 K/s to 1.0 K/s
T > 220 °C	30 s to 70 s
T > 230 °C	min. 10 s
T > 245 °C	max. 20 s
T ≥ 255 °C	–
peak temperature T_{peak}	250 °C +0/-5 °C
wetting temperature T_{min}	230 °C +5/-0 °C for 10 s ± 1 s
cooling rate	≤ 3 K/s
soldering temperature T	measured at solder pads

Table 3: Characteristics of recommended soldering profile for lead-free solder (Sn95.5Ag3.8Cu0.7).

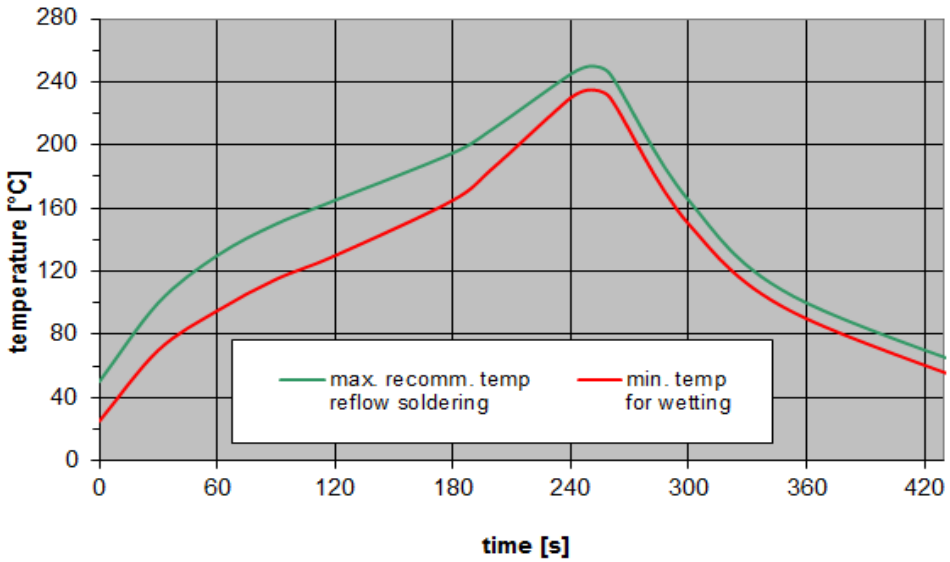

Figure 19: Recommended reflow profile for convection and infrared soldering – lead-free solder.

14 Annotations

14.1 Matching coils

See TDK inductor pdf-catalog http://www.tdk.co.jp/tefe02/coil.htm#aname1 and Data Library for circuit simulation http://www.tdk.co.jp/etvcl/index.htm.

14.2 RoHS compatibility

ROHS-compatible means that products are compatible with the requirements according to Art. 4 (substance restrictions) of Directive 2011/65/EU of the European Parliament and of the Council of June 8th, 2011, on the restriction of the use of certain hazardous substances in electrical and electronic equipment ("Directive") with due regard to the application of exemptions as per Annex III of the Directive in certain cases.

14.3 Scattering parameters (S-parameters)

The pin/port assignment is available in the headers of the S-parameter files. Please contact your local RF360 sales office.

14.4 Ordering codes and packing units

Ordering code	Packing unit
B39741B8012P810	5000 pcs

Table 4: Ordering codes and packing units.

15 Cautions and warnings

15.1 Display of ordering codes for RF360 products

The ordering code for one and the same product can be represented differently in data sheets, data books, other publications and the website of RF360, or in order-related documents such as shipping notes, order confirmations and product labels. The varying representations of the ordering codes are due to different processes employed and do not affect the specifications of the respective products. Detailed information can be found on the Internet under www.rf360jv.com/orderingcodes.

15.2 Material information

Due to technical requirements components may contain dangerous substances. For information on the type in question please also contact one of our sales offices.

For information on recycling of tapes and reels please contact one of our sales offices.

15.3 Moldability

Before using in overmolding environment, please contact your local RF360 sales office.

15.4 Package information

Landing area

The printed circuit board (PCB) land pattern (landing area) shown is based on RF360 internal development and empirical data and illustrated for example purposes, only. As customers' SMD assembly processes may have a plenty of variants and influence factors which are not under control or knowledge of RF360, additional careful process development on customer side is necessary and strongly recommended in order to achieve best soldering results tailored to the particular customer needs.

Dimensions

Unless otherwise specified all dimensions are understood using unit millimeter (mm).

Dimensions do not include burrs.

Projection method

Unless otherwise specified first-angle projection is applied.

Important notes

The following applies to all products named in this publication:

1. Some parts of this publication contain **statements about the suitability of our products for certain areas of application**. These statements are based on our knowledge of typical requirements that are often placed on our products in the areas of application concerned. We nevertheless expressly point out **that such statements cannot be regarded as binding statements about the suitability of our products for a particular customer application.** As a rule, RF360 Europe GmbH and its affiliates are either unfamiliar with individual customer applications or less familiar with them than the customers themselves. For these reasons, it is always ultimately incumbent on the customer to check and decide whether an RF360 product with the properties described in the product specification is suitable for use in a particular customer application.
2. We also point out that **in individual cases, a malfunction of electronic components or failure before the end of their usual service life cannot be completely ruled out in the current state of the art, even if they are operated as specified.** In customer applications requiring a very high level of operational safety and especially in customer applications in which the malfunction or failure of an electronic component could endanger human life or health (e.g. in accident prevention or life-saving systems), it must therefore be ensured by means of suitable design of the customer application or other action taken by the customer (e.g. installation of protective circuitry or redundancy) that no injury or damage is sustained by third parties in the event of malfunction or failure of an electronic component.
3. **The warnings, cautions and product-specific notes must be observed.**
4. In order to satisfy certain technical requirements, **some of the products described in this publication may contain substances subject to restrictions in certain jurisdictions (e.g. because they are classed as hazardous)**. Useful information on this will be found in our Material Data Sheets on the Internet (www.rf360jv.com/material). Should you have any more detailed questions, please contact our sales offices.
5. We constantly strive to improve our products. Consequently, **the products described in this publication may change from time to time**. The same is true of the corresponding product specifications. Please check therefore to what extent product descriptions and specifications contained in this publication are still applicable before or when you place an order. We also **reserve the right to discontinue production and delivery of products**. Consequently, we cannot guarantee that all products named in this publication will always be available.
   The aforementioned does not apply in the case of individual agreements deviating from the foregoing for customer-specific products.