P/N	APPLICABLE NOTE(S)	(A SLOT)
−1	1,2	.012
−1SF	1,2	.012
−1CC	1,2	.012
−1CCSF	1,2	.012
−2	1,2	.018
−2SF	1,2	.018
−2CC	1,2	.018
−2CCSF	1,2	.018
−3	1,2	.028
−3SF	1,2	.028
−3CC	1,2	.028
−3CCSF	1,2	.028
−4	1,2	.036
−4SF	1,2	.036
−4CC	1,2	.036
−4CCSF	1,2	.036

REVISIONS				
ZONE	REV	DESCRIPTION	DATE	BY
—	—	—	—	—

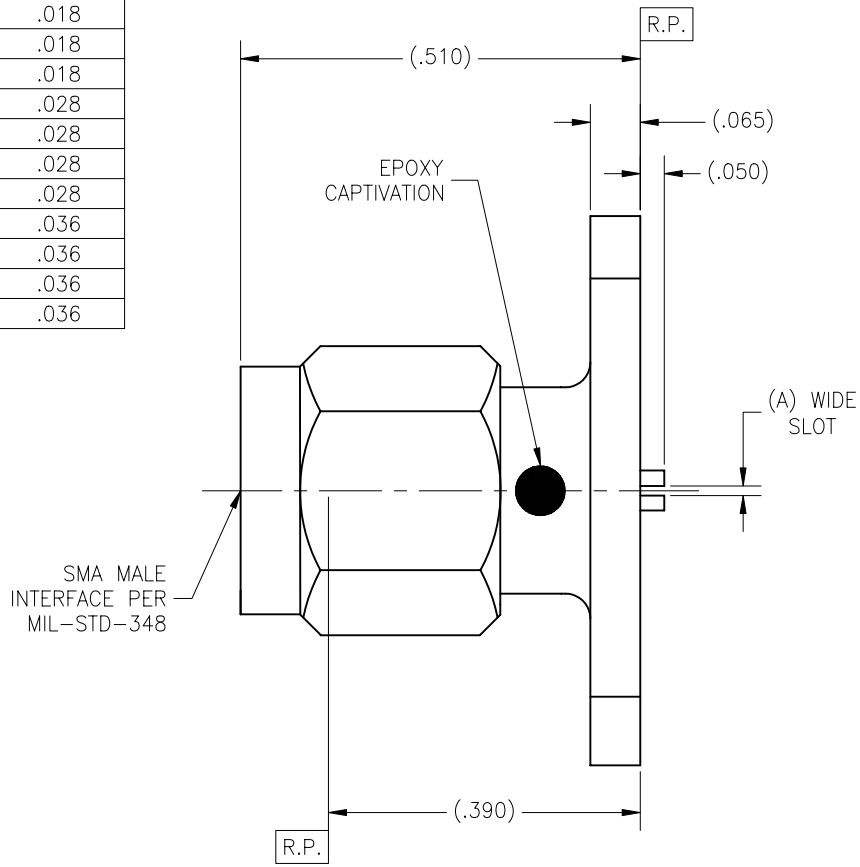

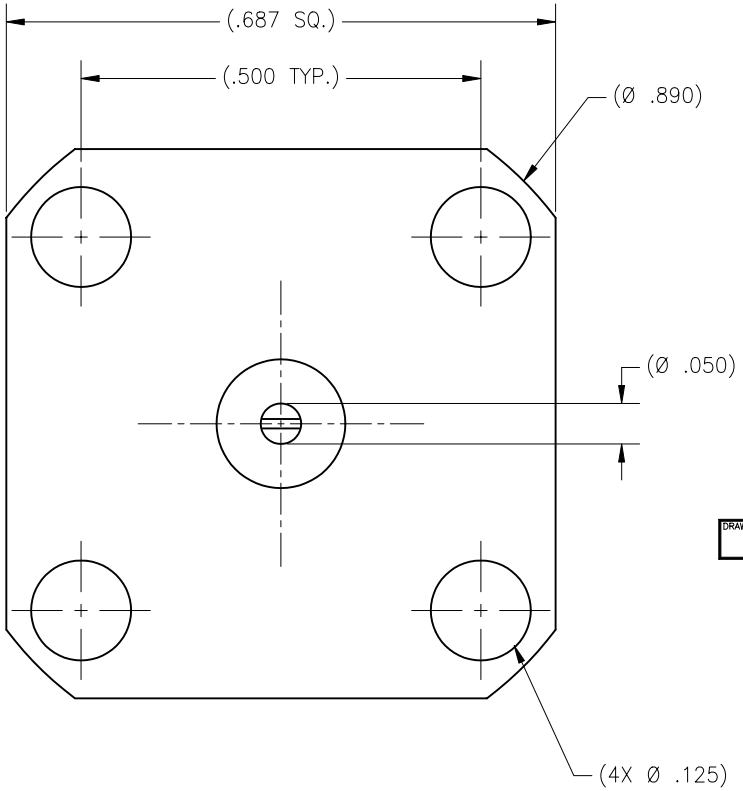

DRAWING NO.	REV.
5355	—

NOTE(S):

1. MATERIALS:
   - 1.1 BODY AND COUPLING NUT: 303 SST PER ASTM A−582.
   - 1.2 INSULATOR: PTFE PER ASTM D−1710
   - 1.3 CENTER CONDUCTOR: BRASS PER ASTM−B16.
   - 1.4 GASKET: SILICONE RUBBER PER ZZ−R−765.
   - 1.5 RETAINING RING: BeCu ALLOY C173 PER ASTM B−196.
   - 1.6 EPOXY (FOR CC's): SIGMA VF TYPE HV
2. FINISH(ES):
   - 2.1 BODY & COUPLING NUT:
     (FOR CCSF & SF's): PASSIVATED PER ASTM A−967
     (FOR BASIC & CC's) GOLD PLATE PER ASTM B−488 OVER NICKEL PLATED PER AMS−QQ−N−290.
   - 2.2 CENTER CONDUCTOR :
     GOLD PLATE PER ASTM B−488 OVER NICKEL PLATED PER AMS−QQ−N−290.
   - 2.3 INSULATOR, EPOXY, GASKET & RETAINING RING: NONE

NOTICE

THIS DRAWING EMBODIES A CONFIDENTIAL PROPRIETARY DESIGN ORIGINATED BY TENSOLITE COMPANY AND ALL DESIGN, MANUFACTURING REPRODUCTION, USE AND SALE RIGHTS REGARDING THE SAME ARE EXPRESSLY RESERVED. IT IS SUBMITTED UNDER A CONFIDENTIAL RELATIONSHIP FOR A SPECIFIED PURPOSE AND THE RECIPIENT AGREES BY ACCEPTING THIS DRAWING NOT TO SUPPLY OR DISCLOSE ANY INFORMATION REGARDING IT TO ANY UNAUTHORIZED PERSON TO INCORPORATE IN OTHER PROJECTS ANY SPECIAL FEATURES PECULIAR TO THIS DESIGN. ALL PATENT RIGHTS HERETO ARE EXPRESSLY RESERVED BY TENSOLITE COMPANY, LONG BEACH, CALIFORNIA 90815.

TOLERANCES AND NOTES EXCEPT AS NOTED

DIMENSIONS ARE IN INCHES.
LINEAR .XX ±.015 .XXX ±.005 ANGULAR ± 1/2°
FRACTION ± 1/32

1. MACHINE FINISH: 63 √ RMS
2. BREAK ALL SHARP EDGES .003 MAX.
3. MACHINED FILLETS .005 MAX.
4. MACHINED SURFACES SQUARE TO RESPECTIVE AXIS WITHIN .005 INCHES PER INCH.
5. MACHINED DIAMETERS CONCENTRIC WITHIN .002 T.I.R.
6. DIMENSIONS TO BE MET BEFORE PLATING.
7. CHAMFER ALL THREADS 45°.
8. THREADS PER H−28
9. REMOVE FRAYED EDGES ON TEFLON.
10. REMOVE ALL BURRS.

MATERIAL	SIZE	SPECIFICATION	PROCUREMENT
SEE NOTES	–	SEE NOTES	–

NEXT ASSY

APPROVAL	INITIALS	DATE
DRAWN BY	IMG	04.11.02
CHECKED		
QUALITY		
ENGINEERING	ATV	06.20.02

Tensolite
HIGH PERFORMANCE CABLES & INTERCONNECT SYSTEMS
Long Beach, California 90815

TITLE: SMA MALE 4 HOLE FLANGE (.687 SQ.) MOUNT STRAIGHT TO HOR. SLOT TERMINATION

SCALE 8/1 | SUB-DIRECTORY\FILENAME OL_ | SHEET 1 OF 1

SIZE C | CAGE CODE 30990 | DRAWING NO. 5355 | REV. —