P/N	APPLICABLE NOTE(S)	APPLICABLE FIGURE(S)
-1CC	1,2,3	1
-2CC	1,2,3	2

REVISIONS

ZONE	REV	DESCRIPTION	DATE	BY
-	C	ECO 11839	07/07/00	IMG
-	D	ECO 13240	04.30.01	AGS
-	E	ECO 13793	10.11.01	AGS

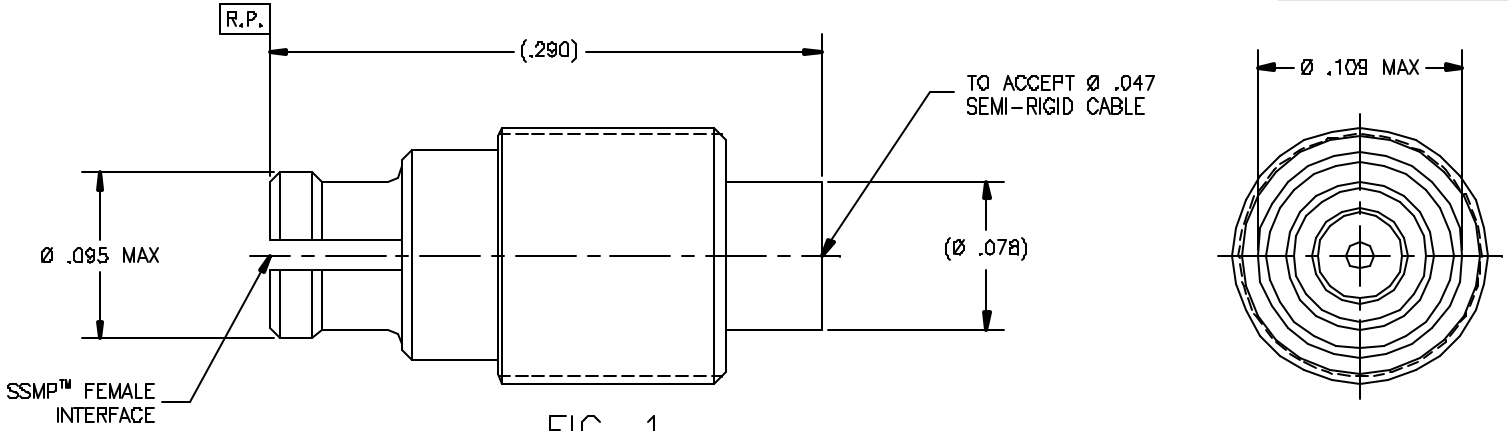

FIG. 1

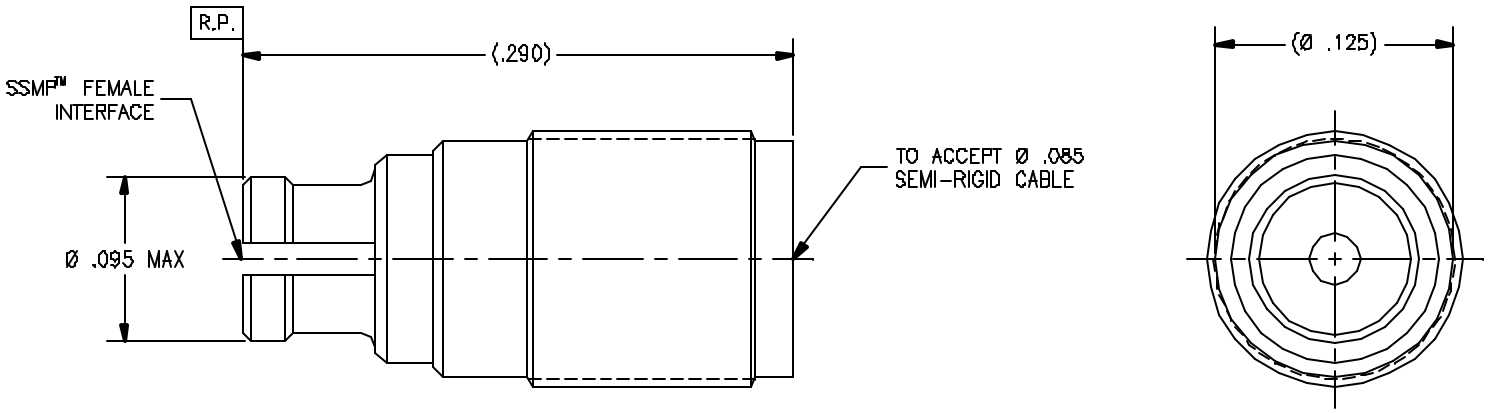

FIG. 2

DRAWING NO. P107 REV. E

NOTE(S):

1. MATERIAL(S):
   - 1.1 BODY & CONTACT: BeCu ALLOY PER ASTM B-196.
   - 1.2 INSULATOR: PTFE PER ASTM D-1710
   - 1.3 DIELECTRIC STOP: PEEK
2. FINISHE(S):
   - 2.1 BODY & CONTACT: GOLD PLATE PER ASTM B-488 OVER NICKEL PLATE PER AMS-QQ-N-290.
   - 2.2 INSULATOR & DIELECTRIC STOP: NONE
3. ELECTRICAL PERFORMANCE(S):
   - 3.1 FREQUENCY RANGE: DC-40 GHz
   - 3.2 R.F. INSERTION LOSS: 0.25 dB MAX TO 40 GHz
   - 3.3 VSWR: 1.70:1 MAX TO 40 GHz

SSMP™ IS A REGISTERED TRADEMARK OF TENSOLITE COMPANY.

APPLICABLE TENSOLITE DOCUMENTS

WORK STD	PROD INST	ASSY INST
NA	NA	NA

NOTICE

THIS DRAWING INCORPORATES A CONFIDENTIAL, PROPRIETARY DESIGN GENERATED BY TENSOLITE COMPANY AND ALL DESIGN, MANUFACTURING REPRODUCTION, USE AND SALE RIGHTS REGARDING THE SAME ARE EXPRESSLY RESERVED. IT IS SUBMITTED UNDER A CONFIDENTIAL RELATIONSHIP FOR A SPECIFIC PURPOSE AND THE RECIPIENT AGREES BY ACCEPTING THE DRAWING NOT TO SUPPLY OR DISCLOSE ANY INFORMATION REGARDING IT TO ANY UNAUTHORIZED PERSON TO INCORPORATE IN OTHER PRODUCTS ANY SPECIAL FEATURES PECULIAR TO THIS DESIGN. ALL PATENT RIGHTS HERETO ARE EXPRESSLY RESERVED BY TENSOLITE COMPANY, LONG BEACH, CALIFORNIA 90815.

TOLERANCES AND NOTES EXCEPT AS NOTED

DIMENSIONS ARE IN INCHES
LINEAR .XX ±.010 .XXX ±.005 ANGULAR ± 1/2°
FRACTION ± 1/32

1. MACHINE FINISH 63 RMS
2. BREAK ALL SHARP EDGES .003 MAX.
3. MACHINED FILLETS .005 MAX.
4. MACHINED SURFACES SQUARE TO RESPECTIVE AXIS WITHIN .005 INCHES PER INCH.
5. MACHINED DIAMETERS CONCENTRIC WITHIN .002 T.I.R.
6. DIMENSIONS TO BE MET BEFORE PLATING.
7. CHAMFER ALL THREADS 45°.
8. THREADS PER H-28.
9. REMOVE FRAYED EDGES ON TEFLON.
10. REMOVE ALL BURRS.

MATERIAL	SIZE	DESCRIPTION	PROCUREMENT
-	-	-	-

NEXT ASSY

APPROVAL INITIALS		DATE
DRAWN BY	DKN	09/22/98
CHECKED		
QUALITY		
ENGINEERING	ATV	10.15.01

Tensolite
HIGH PERFORMANCE CABLES & INTERCONNECT SYSTEMS
Long Beach, California 90815

TITLE: SSMP™ FEMALE STRAIGHT TO SEMI-RIGID CABLE

SCALE 20:1 | SUB-DIRECTORY/FILENAME _CLPXX\CLP107 | SHEET 1 OF 1

SIZE C | CODE IDENT 30990 | DRAWING NO. P107 | REV. E