RF COAXIAL CONNECTORS GENERAL CATALOGUE

Edition 2007/2008

HUBER+SUHNER

Excellence in Connectivity Solutions

HOW TO USE THIS CATALOGUE

How to select a suitable connector for a particular cable

A straight BNC plug, crimp style, is required for cable RG 142
- consult the section on cables, see pages 28 to 34
- select the desired flexible cable RG 142
- in the column „cable group, crimp" you will find U9
- then refer to BNC series on page 199
- from the contents section, find „Cable Connectors" on page 202
- from there, look for "straight plugs, for flexible cables, cable entry H+S full crimp"
- select cable group U9 and find suitable connector:

on page 203 11_BNC-50-3-16/133_NE (single packaging)
on page 203 11_BNC-50-3-16/133_NH (100 pcs packaging)

Please note that cable RG 223 and EF 142 will also be suitable for the selected connectors, as these cables also fit into cable group U9.

How to find matching cables for a particular connectors type

For example, to find which cables fit the 11_BNC-50-3-5
- consult the connector type index starting on page 425
- select 11_BNC-50-3-5 from the BNC series section, and find page 202
- the cable group column will indicate U7 and U10 for this connector
- refer to the cable section on page 28
- find suitable cables for group U7 G03232, GX03272, RG 58, RG 303
  and for group U10 RG 142, EF 142, RG 223, RG 400, EF 400

How to use the „Type Index"

The type number index should be used when you have a connector part number, but no actual information about it. The type index on page 425 contains an alphabetical listing of all connectors found within this catalogue. Each part number is referenced against the appropriate page number, where all relevant information is located.

- More information about connector selection see page 11
- Suitable tools see page 385
- For any accessories (insultaing washers, taper sleeves, solder tags, fastening screws, etc.) see page 403

IMPORTANT NOTE:
This catalogue does not show all the articles we have in our product range.
For more information, please contact our affiliate or agent in your country.

CONTENTS

GENERAL INFORMATION

SERIES NOT MENTIONED IN THIS CATALOGUE

For several reasons, only the most popular HUBER+SUHNER connector series and the appropriate connectors are mentioned in this catalogue. Connectors series such as C, UHF, SMPX etc. belong to the extended product range. The selection within these series however is rather limited. For more information, please contact our subsidiary or agent in your country.

Series	Coupling mechanism	Frequency range	Interface standard
C – mid size coaxial connector	bayonet	DC – 11 GHz	– IEC 169-7 – MIL-C-39012 – DIN 47222
4195 – mid size coaxial connector	screw-on	DC – 14 GHz	– IEC 169-11 – VG 95277
UHF – mid size coaxial connector	screw-on	DC – 200 MHz	– IEC 169-12
PC7 (sexless) – mid size precision coaxial connector	screw-on	DC – 18 GHz	– IEC 457-2 – IEEE Std. 287
SMPX – micro miniature coaxial precision connector	snap-on	DC – 40 GHz	– MIL-STD 348A/326 – DSCC 94007/94008
PC2.4 – subminiature precision coaxial connector	screw-on	DC – 50 GHz	Mateable with: APC-2.4, OS-50, HP-2.40 and RPC-2.40

FAKRA - THE HUBER+SUHNER CONNECTORS FOR THE AUTOMOTIVE INDUSTRY

The FAKRA connectors meet the requirements of automotive electronics in the fields of Multimedia, Telematics, Safety&Security.
They are compatible with the international ISO 20860, the North American SAE/USCAR and the German DIN 72594 standard. The design of the connector interface is based on the proven SMB connectors to IEC 169-10, but includes an additional plastic housing. This housing contains a mechanical locking device which prevents disconnect in high vibration environments. Our connectors are space- and weight-saving, and they offer over 13 mechanical and colour codings which virtually rule out confusions during connection. Detailed information on our FAKRA connectors are listed in a special product catalogue (Item no. 23040275).

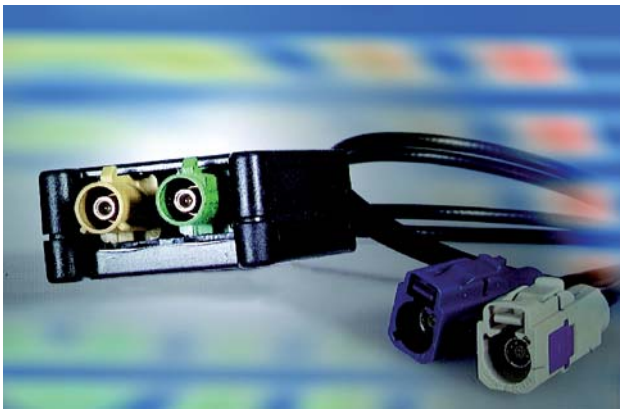

SERVICES AND SUPPORT

Non standard connectors

Although our standard assortment is broad and miscellaneous, there are customer requirements which need a special solution. Thanks to capabilities and years of experience, HUBER+SUHNER is the ideal partner when customized solutions are demanded.

3D Files

For the exchange of CAD models between various CAD systems, HUBER+SUHNER is providing the customers with 3D files in IGS or STEP data format.

Simulations

HUBER+SUHNER has the ability and the tools for computer simulation of customer specific printed circuit board layouts.

ENGINEERING NOTES, GLOSSARY, ETC.

Since there is a RF Connector Guide available from HUBER+SUHNER, we deal with connector specific data only in this catalogue. We do not go into details regarding engineering notes or glossary etc. If you want to know more about RF connectors, please order the HUBER+SUHNER RF Connector-Guide under article number 648116 (english version) or 84009865 (german version)

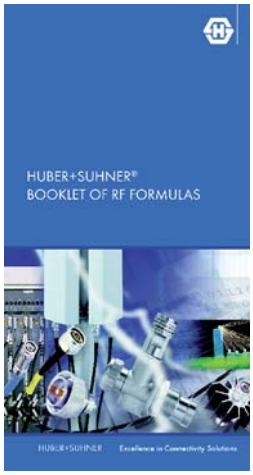

DEFINITIONS AND TYPE CODES

HUBER+SUHNER PART NUMBER

11_BNC-( )50-3-4/XYZ (1 2)

- Additonal code for plating 1 and packing 2.
- Plating code (X=center contact, Y=outer contact, Z=housing or other metal parts)
- Type variation (continuous)
- Cable dielectric size, rounded to the nearest mm
- Impedance / ( ) ⇒ Extension for special attribute (see legend below)
- Connector series
- Connector pattern

Examples:

82 MMCX-**S**50-0-51
...../111 **NH**

...../111 **NY**

S = SMT (Surface mount)
N = Nickel underplating
H = Packing (bulk, 100 pcs)
Y = variable industrial packing (quantity depending on size of connector type)

LEGEND

Plating code (XYZ)

0	=	silver
1	=	gold or SUCOPRO
2	=	nickel
3	=	SUCOPLATE
4	=	chromium
5	=	tin plated
9	=	stainless steel

Additional code for plating 1

N	=	gold plating, nickel underplated
U	=	gold plating, not nickel underplated

Additional code for packaging 2

E	=	single packaging
F	=	bulk with 50 pieces
G	=	tape and reel with 750 pieces
H	=	bulk with 100 pieces
L	=	tape and reel with 1500 pieces
Y	=	variable industrial packing

Extension for special attribute: ( )

L	=	left run thread
P	=	press-fit
Q	=	quick-mate
R	=	reverse sex
S	=	surface mount (SMT)
T	=	reverse sex surface mount (SMT)
U	=	unusual types (deviation form standard interface)
V	=	reverse sex press-fit
Z	=	zinc die casting

CONNECTOR PATTERNS

DEFINITION OF PLUG AND JACK

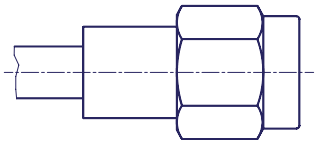

plug

A plug is a connector featuring the active part of the coupling mechanism (for example coupling nut).

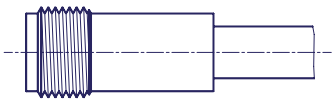

jack

A jack is a connector featuring the coupling mechanism complementary to the plug.

PATTERNS

10... Right angle panel cable plug(male)/flange mount

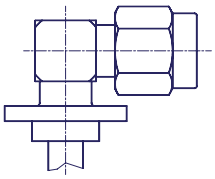

11... Straight cable plug (male)

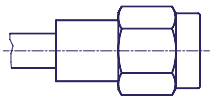

12... Straight bulkhead receptacle, plug (male)

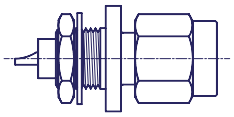

13... Straight panel receptacle, plug (male), flange mount

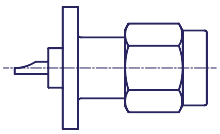

14... Straight bulkhead cable plug (male)

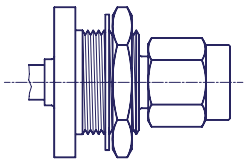

15... Straight panel cable plug (male)

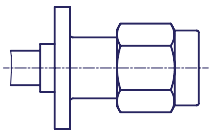

16... Right angle cable plug (male)

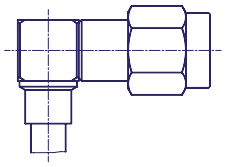

17... Right angle bulkhead receptacle, plug (male)

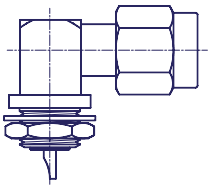

18... Right angle panel receptacle, plug (male), flange mount

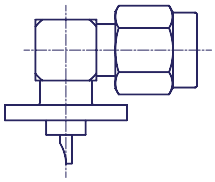

19... Right angle bulkhead cable plug (male)

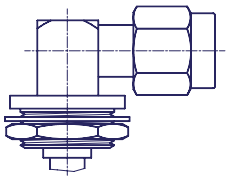

20... Right angle panel cable jack (female),flange mount

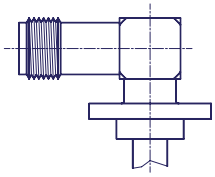

21... Straight cable jack (female)

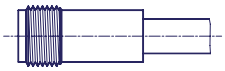

22... Straight bulkhead receptacle, jack (female)

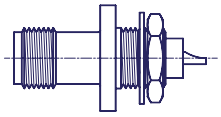

23... Straight panel receptacle, jack (female), flange mount

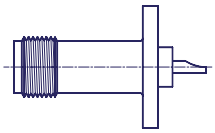

24... Straight panel bulkhead cable jack (female)

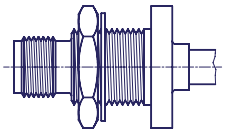

25... Straight panel cable jack (female), flange mount

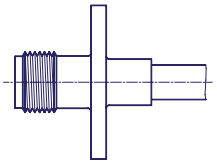

26... Right angle cable jack (female)

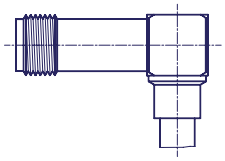

27... Right angle bulkhead receptacle, jack (female)

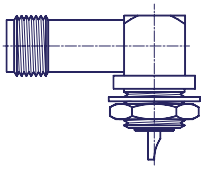

28... Right angle panel receptacle, jack (female), flange mount

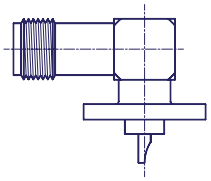

29... Right angle bulkhead cable jack (female)

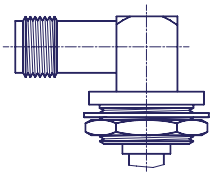

31... Adaptor jack/jack (female/female)

32... Adaptor plug/plug (male/male)

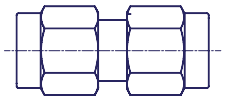

33... Adaptor plug/jack (male/female)

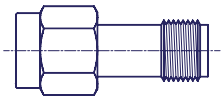

34... Bulkhead adaptor jack/jack (female/female)

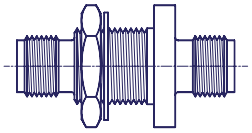

35... Bulkhead adaptor plug/plug (male/male)

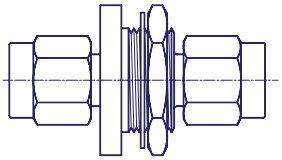

36... Bulkhead adaptor plug/jack (male/female)

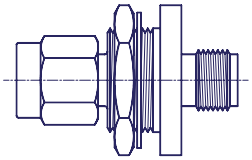

37... Panel adaptor jack/jack (female/female), flange mount

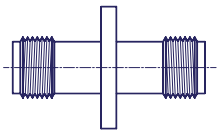

38... Panel adaptor plug/plug (male/male), flange mount

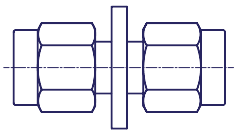

39... Panel adaptor plug/jack (male/female), flange mount

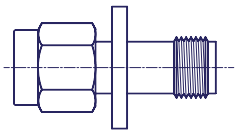

41... T-adaptor, 3 plugs (male)

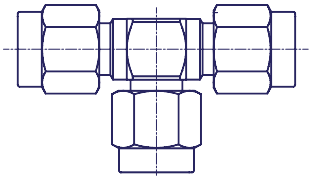

42... T-adaptor, 2 plugs (male), 1 jack (female), asymmetric

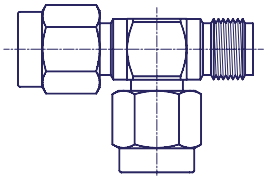

43... T-adaptor, 2 jacks (female), 1 plug (male)

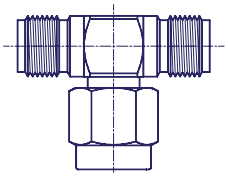

44... T-adaptor, 2 plugs (male), 1 jack (female)

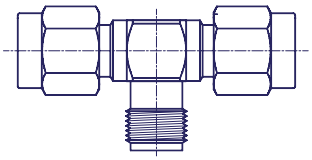

45... T-adaptor, 1 plug (male), 2 jacks (female), asymmetric

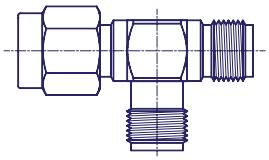

46... T-adaptor, 3 jacks (female)

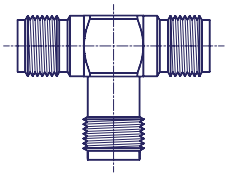

47... T-cable junction

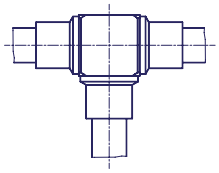

51... L-adaptor jack/jack (female/female)

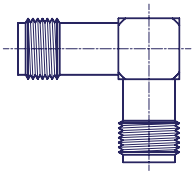

52... L-adaptor plug/plug (male/male)

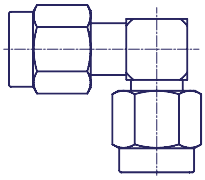

53... L-adaptor plug/jack (male/female)

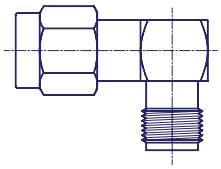

54... Bulkhead-L-adaptor jack/jack (female/female)

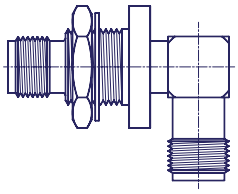

55... Bulkhead-L-adaptor plug/plug (male/male)

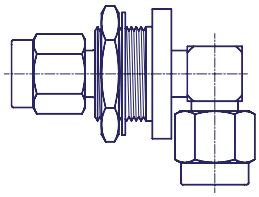

56... Bulkhead-L-adaptor jack/plug (female/male)

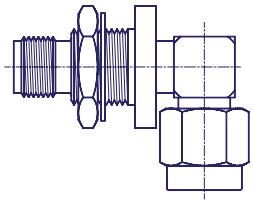

57... Panel L-adaptor jack/jack (female/female), flange mount

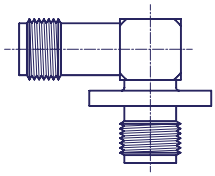

58... Panel L-adaptor plug/plug (male/male), flange mount

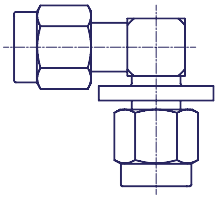

59... Panel L-adaptor plug/jack (male/female), flange mount

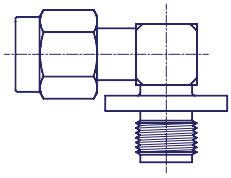

61... Protective cap for plug (male)

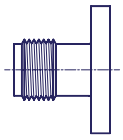

62... Protective cap for jack (female)

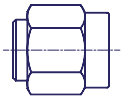

63... Shorting jack (female)

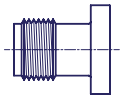

64... Shorting plug (male)

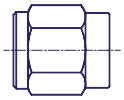

65... Termination

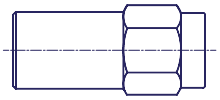

71... Straight bulkhead cable feed through

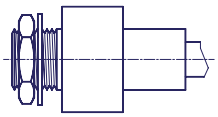

80... PCB T-cable junction

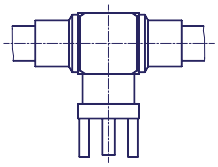

81... Straight PCB plug (male)

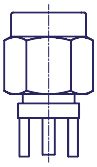

82... Straight PCB jack (female)

83... Straight PCB cable terminator

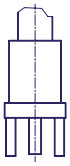

84... Right angle PCB plug (male)

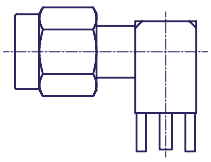

85... Right angle PCB jack (female)

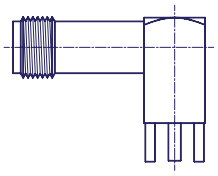

86... Right angle PCB cable terminator

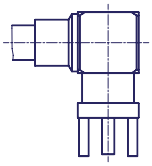

87... PCB T-adaptor jack/jack (female/female)

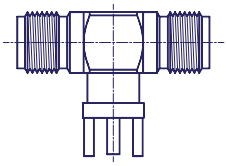

88... PCB T-adaptor plug/plug (male/male)

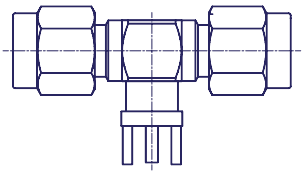

89... PCB T-adaptor plug/jack (male/female) 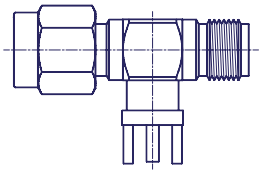		
90... Combi-print-connector 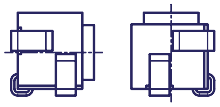	91... Edge mount PCB plug (male) 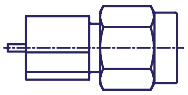	92... Edge mount PCB jack (female) 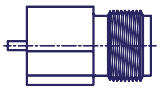
93... Right angle PCB plug with ground pin in-hole and SMT signal pin (male) 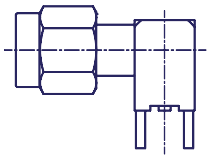	94... Right angle PCB jack with ground pin in-hole and SMT signal pin (female) 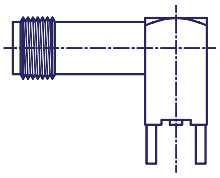	95... Straight PCB plug with ground pin in-hole and SMT signal pin (male) 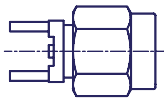
96... Straight PCB jack with ground pin in-hole and SMT signal pin (female) 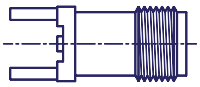		

SELECTING CONNECTOR, PLATING AND PACKAGING

HOW TO SELECT THE SUITABLE COAXIAL CONNECTOR SERIES

Technical Elements

Frequency, cable type, impedance and coupling mechanism are key factors to consider in selecting a coaxial connector series. Depending on the application, other factors such as sealing, temperature, working voltage, IM performance, vibration etc. also have to be taken into account.
Connectors must, at a minimum, provide the same level of performance as the cable or the application to which they are attached. This means, before selecting a connector series the cable type or the application has to be known. Its structure, dimensions and frequency range restrain the connector series that can be used.

The table below shows the different cable structures and the suitable connector series.

CABLE STRUCTURE	SUITABLE CONNECTOR SERIES
Coaxial cables	BNC, BMA, DIN 7/16, DIN 1.0/2.3, MCX, MMCX, MMBX, MMPX, N, QN, PC 3.5, SK, QLA, SMA, QMA, SMB, SMC, SMS, TNC
Balanced twin cables	BNO
Triaxial cables	BNT
High voltage (coaxial cables)	MHV (H4), SHV
Board to board	MMBX

Cut-off frequency as well as coupling mechanism of a connector series limit the frequency range that a connector can operate. The following table shows the frequency range of different connector series within this catalogue.

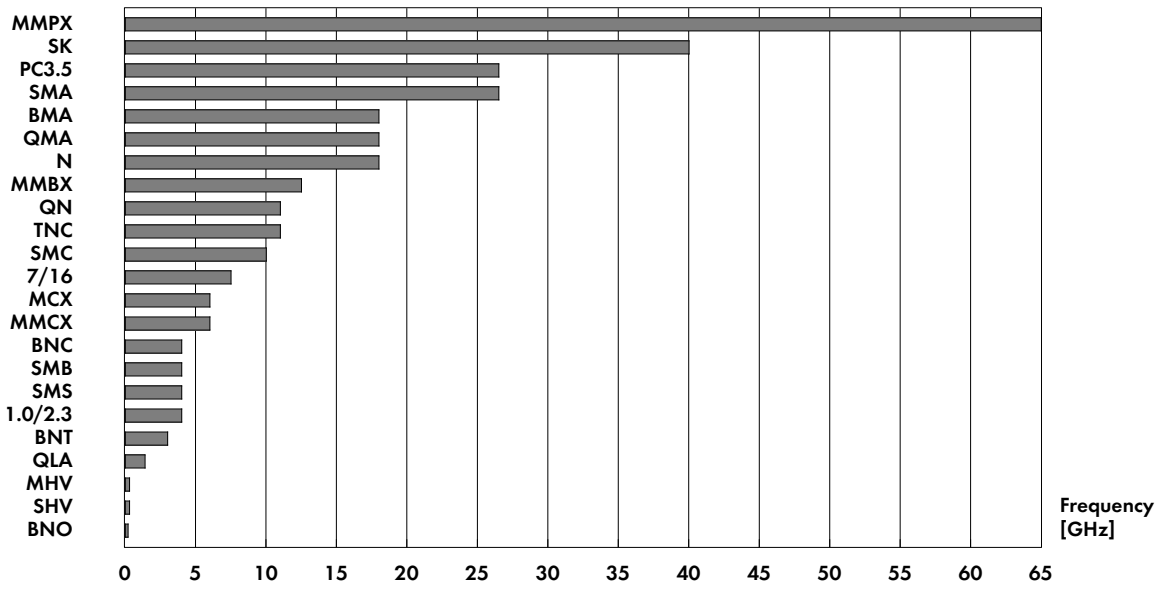

Frequency range of connector series

COUPLING MECHANISMS

Coupling mechanisms make it possible to mate connector pairs and also determine whether or not the mated pair can meet the specified mechanical and electrical characteristics, such as operating frequency.
The following four types of mechanisms are commonly used for the series described in this catalogue.

Screwed Coupling Mechanism

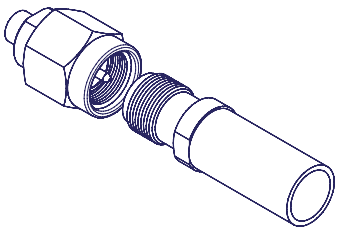

The coupling mechanism consists of a thread and a coupling nut. Special attention must be paid to the maximum torque permitted and the coupling nut captivation.

The screwed connection is used in series like SMC, SMA, TNC, N and 7/16 because the mechanism guarantees the most solid, stationary coupling suited for e.g. test and measurement, military and telecoms applications.

Bayonet Coupling Mechanism

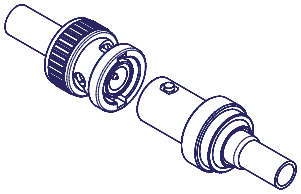

The bayonet coupling is a twist -snap connection. The coupling mechanism is best known through the BNC.

The bayonet connection often is chosen as coup-ling when it is important to have a sturdy mechanism and at the same time fast mating. Therefore, the mechanism is reliable for test and measurement applications as well as military systems. Used in the series BNC, BNO, BNT, SHV and MHV.

Snap-on Coupling Mechanism

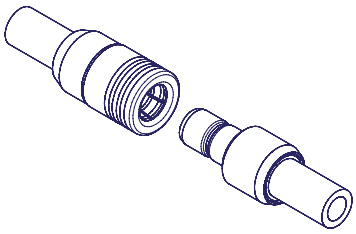

The snap mechanism is commonly used for connectors with small mechanical dimensions and high packing density. Because this type of connection is easy to use, it is often designed into PCB applications.

The main feature of the snap-on mechanism is that the engagement and disengagement action can be completed extremely quickly. This mechanism is very reliable when used for small connectors such as MMCX, MMPX, MCX and SMB series.

QUICK-LOCK Coupling Mechanism

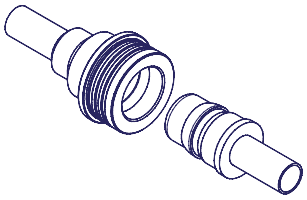

A QUICK-LOCK coupling mechanism is basically a snap-on interface with additional self-locking. Demating is performed by retracting the unlock-sleeve of the male connector.

Quick-Lock connectors prevent unintentional loosening of mated pairs and they provide a fast and reliable interconnection. The QMA and QN connector interface feature this time saving locking mechanism.

Slide-on Coupling Mechanism

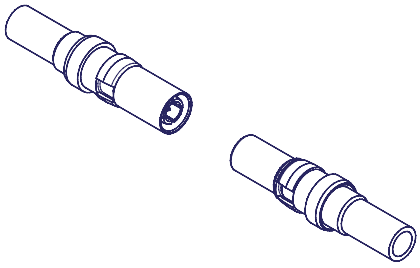

The slide mechanism is used extensively where a high packing density and easy handling is needed. A typical application is the interconnection of daughter boards to mother boards.

This mechanism is often used for various DIN-multiport connectors and also with connectors such as BMA, MMBX, SMS or DIN 1.0/2.3 wich are commonly attached to PCBs.

COUPLING MECHANISMS	CONNECTOR SERIES
Bayonet	BNC, BNO, BNT, MHV (H4), SHV
Quick-Lock	QMA, QN
Threaded	DIN 7/16, DIN 4.1/9.5, SK, N, PC 3.5, SMA, SMC, TNC
Snap-on	MMCX, SMPX, MCX, QLA, SMB, MMPX
Slide-on	BMA, MMBX, DIN 1.0/2.3, SMS

Overview coupling mechanisms

For further technical information, such as contact captivation, attachments etc., please refer to the HUBER+SUHNER RF CONNECTOR GUIDE (Item no. 648116), Chapter RF CONNECTOR DESIGN.

PLATING INFORMATION

We are your plating technology specialist and your competent partner for developing and applying proper coatings for specific uses and conditions. This section explains the metallic plating used for the different HUBER+SUHNER connectors.

The demands towards connector platings are multiple, such as:

> add conductive material to supply sufficient current carrying capacity (good electrical and thermal conductivity)

> diminish or eliminate surface oxidation/corrosion and provide protective coating over conductors

> provide good contact between conductors

> achieve a good solder or weld attachment surface

> obtain a better wear resistance (abrasion resistance and hardness)

Our main platings are
> gold
> silver
> SUCOPLATE® (H+S plating)
> SUCOPRO (H+S plating)

Gold

Gold (acc. to MIL-G-45204C Type II) is a precious metal available either as soft fine gold or as hard version. It is a good heat and electricity conductor and unaffected by air and most reagents, which makes it a superb material for electrical signal transmission. Gold can be deposited on nickel or copper. It is quite expensive compared to other plating materials

Application

The major use of gold in RF applications is for plating. Inner conductors are frequently gold-plated when e.g. good conductivity, excellent oxidation resistance and continuous mating (repeatibility) are required (e.g. in defence applications). Even in highly pollluted atmospheres, a gold surface will be free of oxide.

Gold offers the following main advantages:

> excellent wettability / solderability

> excellent protection against corrosion

> low contact resistance

> good wear resistance

Color: ➧ gold colored

Silver
Silver is often used for the plating of coins. It is a little harder but also cheaper than gold. Its excellent electrical and thermal conductivity makes it very suitable for surface plating. Silver is used in RF applications for making solder, brazing and sliding contacts. Having the best conductivity of all metals also means that this metal can carry a high current load with the least loss. This characteristic is particularly advantageous when a low passive intermodulation product is desired.

Other features of silver are that it is easily shaped, provides very good heat conductivity , good corrosion resistance in air and water and - in addition - the lowest contact resistance. A disadvantage is that silver tarnishes (creates an oxide film on the surface) when exposed to ozone, hydrogen sulphide and sulphur. Tarnishing does not have any influence on the electrical performance.

Application
Silver is the standard plating for connector bodies and inner pins of 7/16 connectors. Traditionally, silver plating is well-known as a very good plating for low passive intermodulation components.
Thanks to its good solderability, silver is used for soldering ferrules and cable entries.

Silver offers the following main advantages:

> excellent electrical conductivity
> good corrosion resistance
> low contact resistance
> good solderability
> good passive intermodulation properties

Color: ➧ silver colored

SUCOPLATE®
As one of the leading RF connector manufacturers, HUBER+SUHNER has delivered several hundred million coaxial connectors with SUCOPLATE plating to demanding customers worldwide. These components, featuring unique mechanical and electrical properties, are used in a wide range of applications such as off-shore, airframes, space, test+ measurement, telecommunications and wireless.

SUCOPLATE is a copper alloy composed of three components: copper, tin and zinc. Being non-magnetic and nonallergic (nickel-free), SUCOPLATE is an attractive alternative to nickel plating.
It has a good electrical performance and corrosion resistance. The non-magnetic property in the contact area is also important for obtaining negligible passive intermodulation products (PIM) in communication systems such as base transceiver stations. SUCOPLATE performs just as well as silver, as it has a PIM level of less than -155 dBc.

SUCOPLATE offers the following important performance highlights:

> superior electrical conductivity and low contact resistance
> non-magnetic
> excellent passive intermodulation performance equal to silver
> uniform plating thickness
> high abrasion resistance
> low surface friction
> excellent adhesion and ductility (no cracking when bending parts)
> tarnish resistant
> high corrosion resistance
> nonallergic

Color: ➧ similar to stainless steel

SUCOPRO - THE GOLD PLATING FOR THE FUTURE

SUCOPRO is a thin gold plating developed by HUBER+SUHNER, featuring a nickel-phosphorus alloy (13 % phosphorus) underlayer.
Below 300 °C the NiP is amorphous and non-magnetic. The gold layer - which is not subject to oxidation itself - protects the nickel-phosphorus underlayer against oxidation, thus allowing good wetting while soldering. It provides stable, low contact resistance and improved protection against oxidation and corrosion. As it contains only a thin layer of gold, the solder joints will not become brittle.
The nickel-phosphorus layer provides very good corrosion resistance, high wear resistance and hardness, and a diffusion barrier against gold, copper, tin and zinc. Between 300 °C and 500 °C, it changes its structure to microcrystalline and its hardness increases, but no brittleness or weak adhesion occurs.

Application

Initially, SUCOPRO was developed for piece parts which demand an excellent solderability and/or wear resistance, means PCB-connectors and adaptors. But more and more customers select this plating also for cable connectors and adaptors.
Meanwhile, SUCOPRO is an excellent plating for almost all subminiature connectors.

SUCOPRO plating offers the following main advantages:

> excellent wear resistance for more than 1000 mating cycles
> non-magnetic
> excellent corrosion resistance
> excellent wettability / solderability
> very high strength of soldered joints without embrittlement
> low contact resistance
> good passive intermodulation properties

Color: ➧ gold colored

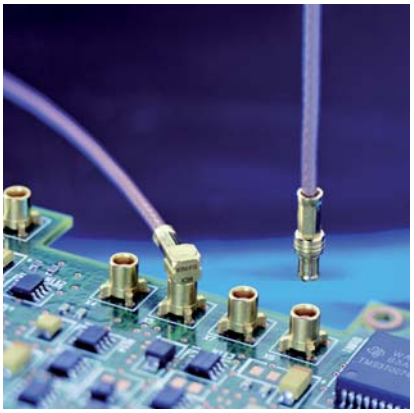

PACKAGING INFORMATION

HUBER+SUHNER attaches great importance to high quality, economic packaging. This section will give you an overview of the types and packaging materials used. All our packagings have to fulfill the following functions:

- Protection of the connectors against mechanical stress, humidity and dust during storage, transport and usage
- Identification and information about the product
- Easy handling for production
- Economic and useful recycling after use

All packagings fulfill the specification according to ISO 14000. For further information please contact your local HUBER+SUHNER representative.

Single and Bulk Packaging

Plastic bags from HUBER+SUHNER are sealed by welding or provided with a Mini-Grip closure (bulk only) for reclosing after use. They are easy to handle and are marked for recycling with the material recycling symbol according to the recommended international DIN standard. For product identification and retraceability, they are labelled with the type version and the order, batch and assembly instruction numbers.

Material: LDPE or PP, transparent

Attributes: Electrostatically conductive,
External resistance 10^8 .... 10^{10} Ω
Air-tight
Chemically resistant
Chlorine-free
Halogen-free

Single (sealed by welding)

Bulk (mini-grip)

Tape+Reel Packaging

The main benefit of T+R packaging is the customer preference for automating connector assembly in the production process using existing assembly machines. This in turn enables them to reduce the cost of the whole manufacturing process. In addition to that, the connectors are protected during transportation and processing. Our Tape+Reel packaging meets the international standards EIA 481 and DIN IEC 286-3. The fully automated packaging machine provides perfect packaging quality.

Material:	Reel	Polystyrene (PS)	(anti-static)
	Carrier Tape	Polystyrene (PS) or Polycarbonate (PC)	(anti-static)
	Carrier Tape	Polystyrene (PS) or Polyethylene Terephthalate (PET)	(anti-static)
	Box	Cardboard	–

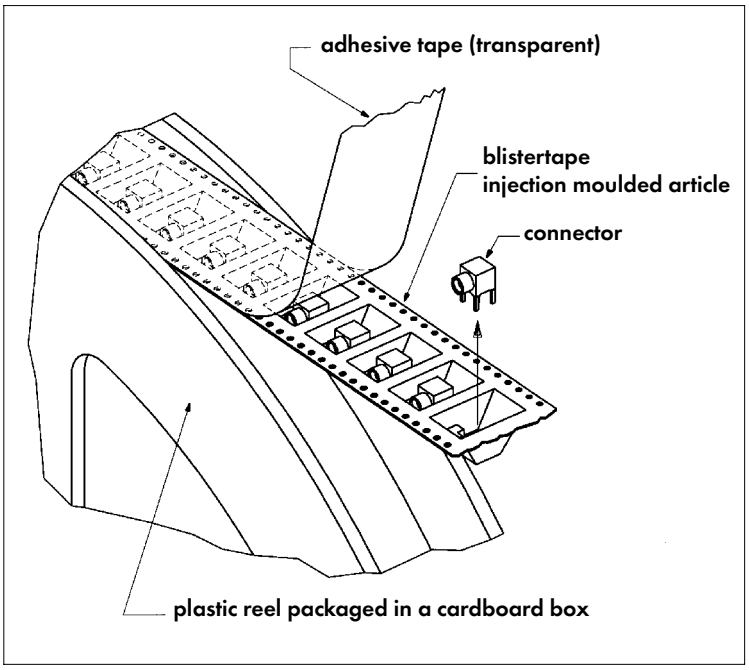

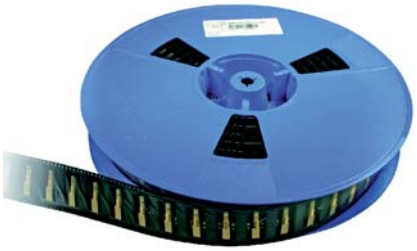

Summary

Type of Packaging	BULK	SINGLE	TAPE&REEL	Notes
Cable Connectors	×	×		- standard for high volumes - standard depending on connector size
Flange Connectors	×	×		- standard for high volumes - standard depending on connector size
PCB Connectors	×		×	- small quantities - standard for high volumes with automatic processing
Adaptors		×		- standard - other packaging on request

CABLE ENTRY VARIANTS, SOLDERING, IP RATINGS, VSWR CONVERSION TABLE

CABLE ENTRIES FOR FLEXIBLE CABLES

HUBER+SUHNER® Full Crimp

Full crimp connectors with crimped centre and outer contacts allow quick and simple assembly with high reliability.

1

Full crimp connectors are normally supplied in three parts: centre contact, body and crimp ferrule.

2

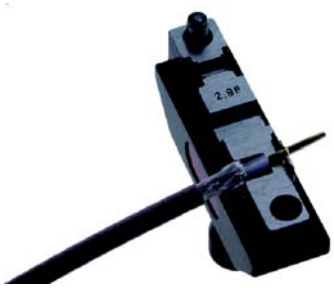

During crimping, the centre contact is accurately positioned in the crimp insert.

3

The pre-assembled cable is pushed into the body. Due to a snap mechanism between center contact and insulator, center contact is captivated and protected against axial displacement.

4

The final operation is crimping of the outer contact ferrule

Cable Entry Crimp

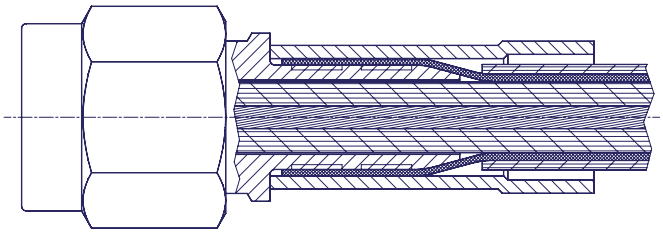

The centre contact is soldered and the cable braid is crimped to the connector body. The crimp technique enables an economic assembling of high reliability. Suitable taper sleeves are available; see page 406.

Cable Entry Clamp

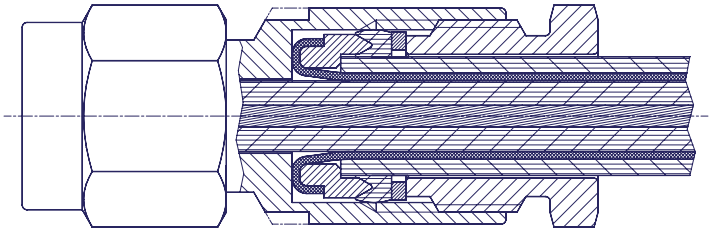

The clamp type cable entry is recommended for weather-exposed applications. The cable jacket is secured by a rubber gasket and the cable screen by an axially tightened press ring.

CABLE ENTRIES FOR SEMI-RIGID CABLES

Soldered, with Pin and Insulator

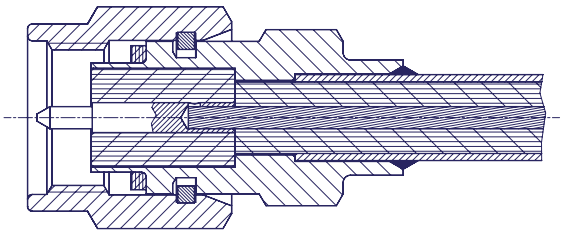

Centre contact and body of the connector are soldered onto the centre or outer conductor of the cable.

Soldered, without Pin and Insulator (SMA for Semi-Rigid cable .141")

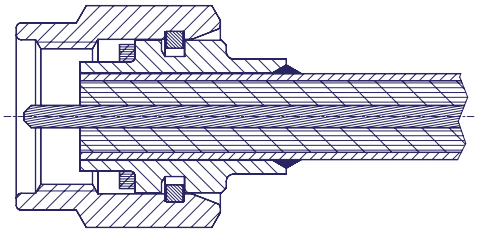

Pin and insulator are formed directly by the cable. The body is soldered to the copper jacket. This design features a very low reflection coefficient, short length, low cost and ease of assembly. Recommended for connections which must not be undone frequently, moisture-sealed.

Solderless Cable Entry, Clamp Cone

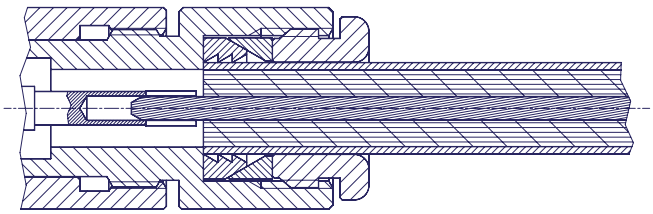

Specially for assembly of large size semi-rigid cables. The copper jacket of the cable is held by a clamp cone.

CABLE ENTRY FOR CORRUGATED COPPER TUBE CABLES

HUBER+SUHNER QUICK-FIT® (e.g. for 7/8" cable)

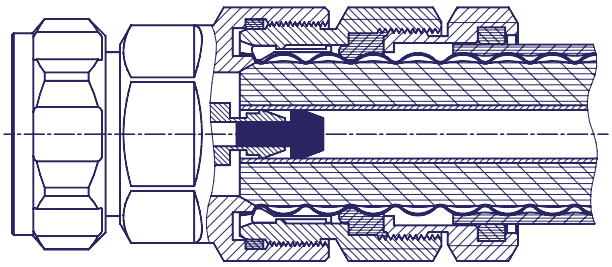

Humidity-proof cable entry for RF cables with corrugated copper tube. The cable entries support standard foam dielectric cables 1/2", 7/8", 1_1/4" and 1_5/8" and 1/4", 3/8" and 1/2" highflex SUCOFEED as well as the equivalent products of Andrew, RFS (Kabelmetal), NK Cables and Eupen. Special assembly tools (see page 399) are available.

FEATURES:
- **low, stable and reproducible PIM (Passive Intermodulation Product)**
- **quick and easy assembly**
- **competitive pricing**
- **IPrating (IP68 for QUICK-FIT connector types)**
- **cable multi-brand compatibility**

SOLDERING

Soldering is an important technique in the assembly of electronic products. It is the process of joining two metals by the use of a solder alloy, and it is one of the oldest known joining techniques.
Good soldering quality as a prerequisite for reliable joints can be achieved only through a soldering process in which a great many variables both with respect to materials and to techniques have been optimised in a integrated system. The various mass-soldering processes all have their own particular characteristics. They differ in the way in which the solder flux and the solder alloy are applied to the parts to be joined and in the manner by which the heat is supplied. The following information describes the soldering methods, temperature and dwell time. This information should be considered as a recommendation. Depending on the specific application, it is up to the user to select the most suitable method.

ITEM TO BE SOLDERED		USUAL METHODS
Centre conductor of coaxial cable		• Soldering iron • Resistance heating
Outer conductor of Semi-Rigid cable	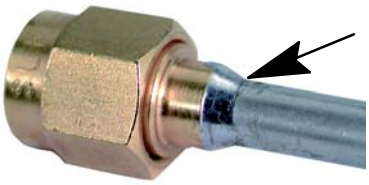	• Inductive (RF) • Soldering iron • Resistance heating
Connector for printed circuit board **through-hole version**	 Soldered underneath PC-Board	• **Wave soldering** • Reflow soldering • Soldering iron
Connector for printed circuit board **surface-mount version**	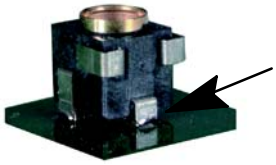	• **Reflow soldering** • Soldering iron
Connector with solder tab	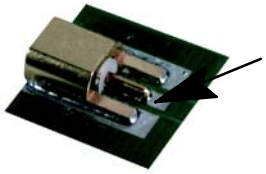	• Soldering iron • Reflow soldering

In addition to the soldering method, temperature and dwell time, parameters such as the flux, surface, material and geometry of the parts to be soldered must be taken into account.

Soldering temperature and dwell time

	TEMPERATURE	DWELL TIME
• **Wave soldering** Single wave Double wave	 max. 260° / 500 °F max. 260° / 500 °F	 approx. 3 sec. approx. 5 sec.
• **Reflow soldering** Infrared Heating plate	temperature profile depending on component (typical profile see below)	
Condensation	215 °C / 419 °F lead solder 230 °C / 446 °F leadfree solder	10 – 30 sec. 10 – 30 sec.
• **Other methods** Iron soldering	variable	approx. 2 sec.

Typical profile for reflow soldering

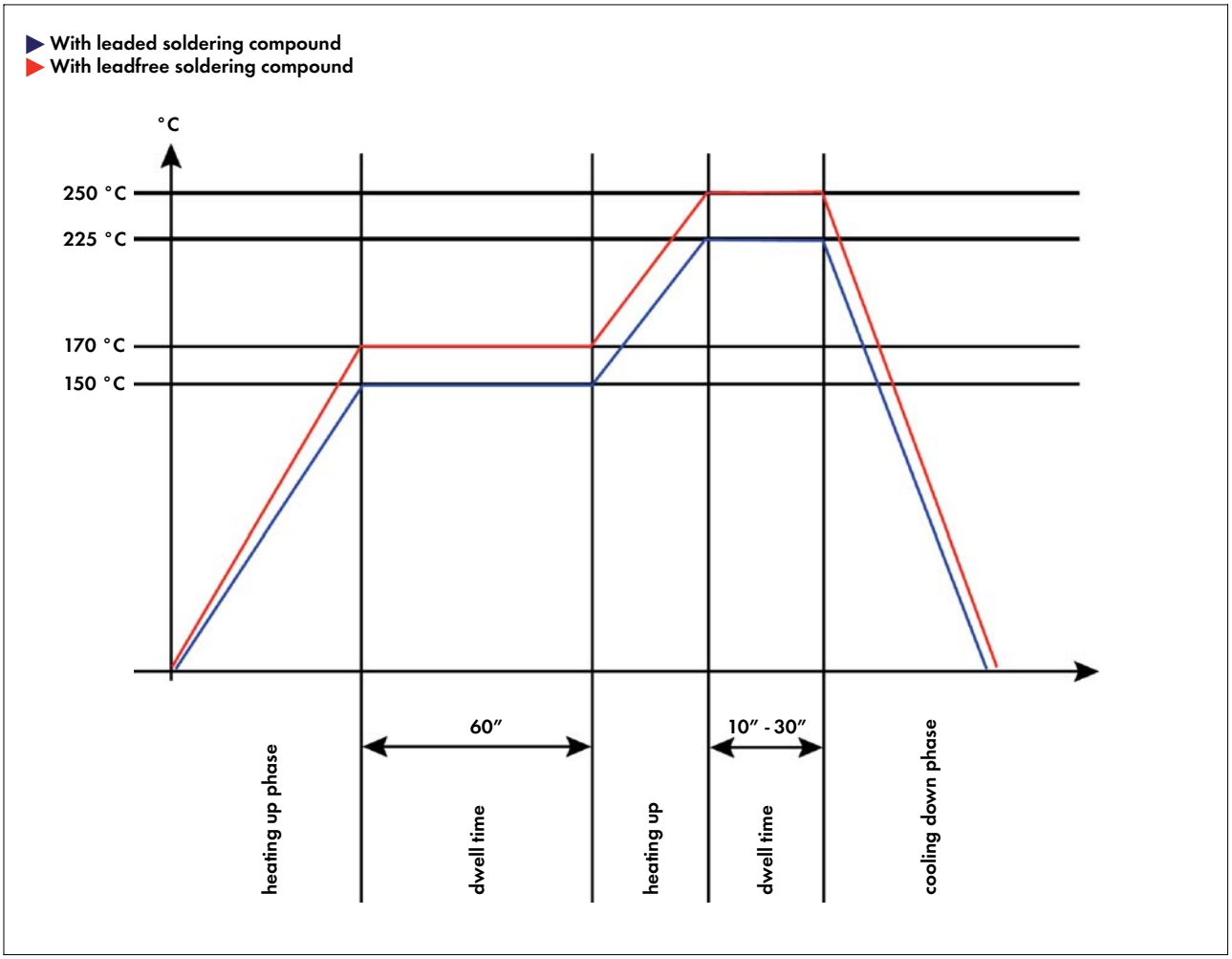

Commonly used solder

Depending on components, soldering termperature etc., the folowing solders are used:

SnPb	**63/37**	**183 °C lead solder**
SnPb	**60/40**	**188 °C lead solder**
SnPbAg	**62/36/2**	**179 °C lead solder**
SnAgCu	**50/48.5/1.5**	**215 °C leadfree solder**
SnAg	**96.5/3.5**	**221 °C leadfree solder**

The higher melting temperature during leadfree soldering is critical for the cable stripping dimensions during assembly. The expansion of the cable dielectric will be larger.

How do you judge the quality of a solder joint?

A good (reliable) solder joint will, during the lifetime of the equipment in which the joint is situated, perform its mechanical and electrical functions without failures. Visual aspects of good soldered joints are:

1. Good wetting
2. Correct amount of solder
3. Sound and smooth surface

All soldered joints on a printed board should give a uniform impression regardless of their location on the printed board. Solder should flow evenly over the surfaces to be soldered and run out thinly towards the edges of the joint. The contact angle should be well under 30° if the surfaces are sufficiently large. Good wetting of both the component and the solder land with the correct amount of solder is so important that this is the major criterion in the assessment of soldered joints. The solder should wet the entire periphery of the termination to be soldered, and from the edge of the solder land the thickness of the solder coat should increase uniformly up to the termination.
Leadfree solder joints have a different appearence from their tinlead counter parts.

- grainy and less bright
- larger wetting angle

IP RATINGS

The IP rating system provides a means of classifying the degree of protection from dust and water afforded by electrical equipment and enclosures. The system is recognised in most countries and is set out in a number of standards, including IEC 60529.

1st. DIGIT: PROTECTION AGAINST SOLID OBJECTS			2nd DIGIT: PROTECTION AGAINST LIQUIDS		
IP x...		**Description / Test**	**IP ...y**		**Description / Test**
0		No protection	**0**		No protection
1	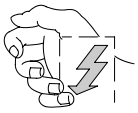	Protected against solid objects over 50 mm, e.g. accidental touch by hands	**1**		Protected against vertically falling drops of water
2		Protected against solid objects over 12 mm, e.g. fingers	**2**		Protected against direct sprays of water up to 15° from the vertical
3	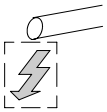	Protected against solid objects over 2.5 mm (tools/wires)	**3**	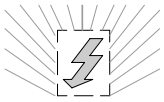	Protected against sprays to 60° from the vertical
4	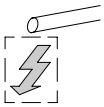	Protected against solid objects over 1 mm (tools /wires / small wires)	**4**		Protected against water sprayed from all directions - limited ingress permitted
5	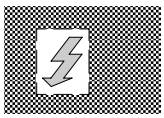	Protected against dust - limited ingress (no harmful deposit)	**5**	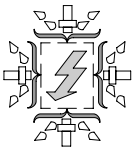	Protected against low pressure jets of water from all directions - limited ingress permitted
6	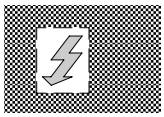	Totally protected against dust	**6**	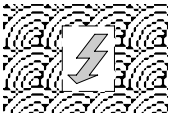	Protected against strong jets of water, e.g. for use on shipdecks - limited ingress permitted
			7	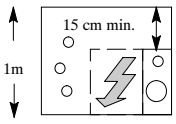	Protected against the effects of immersion between 15 cm and 1 m
			8	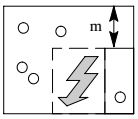	... m Protected against long periods of immersion under pressure

Example:
IP 67: Totally protected against dust and protected against the effects of immersion between 15 cm and 1 m.

REFLECTION → CONVERSION TABLE

VSWR	Rf	RL (dB)
1.010	0.005	46.06
1.020	0.0099	40.09
1.030	0.0148	36.61
1.040	0.0196	34.15
1.050	0.0244	32.26
1.060	0.0291	30.71
1.070	0.0338	29.42
1.080	0.0385	28.30
1.090	0.0431	27.32
1.100	0.0476	26.44
1.110	0.0521	25.66
1.120	0.0566	24.94
1.130	0.061	24.29
1.140	0.0654	23.69
1.150	0.0698	23.13
1.160	0.0741	22.61
1.170	0.0783	22.12
1.180	0.0826	21.66
1.190	0.0868	21.23
1.200	0.0909	20.83
1.210	0.095	20.44
1.220	0.0991	20.08
1.230	0.1031	19.73
1.240	0.1071	19.40
1.250	0.1111	19.08
1.260	0.115	18.78
1.270	0.1189	18.49
1.280	0.1228	18.22
1.290	0.1266	17.95
1.300	0.1304	17.69
1.310	0.1342	17.45
1.320	0.1379	17.21
1.330	0.1416	16.98
1.340	0.1453	16.75
1.350	0.1489	16.54
1.360	0.1525	16.33
1.370	0.1561	16.13
1.380	0.1597	15.94
1.390	0.1632	15.75

RL (db)	Rf	VSWR
50.00	0.0032	1.006
49.00	0.0035	1.007
48.00	0.004	1.008
47.00	0.0045	1.009
46.00	0.005	1.010
45.00	0.0056	1.011
44.00	0.0063	1.013
43.00	0.0071	1.014
42.00	0.0079	1.016
41.00	0.0089	1.018
40.00	0.01	1.020
39.00	0.0112	1.023
38.00	0.0126	1.025
37.00	0.0141	1.029
36.00	0.0158	1.032
35.00	0.0178	1.036
34.00	0.02	1.041
33.00	0.0224	1.046
32.00	0.0251	1.052
31.00	0.0282	1.058
30.00	0.0316	1.065
29.00	0.0355	1.074
28.00	0.0398	1.083
27.00	0.0447	1.094
26.00	0.0501	1.106
25.00	0.0562	1.119
24.00	0.0631	1.135
23.00	0.0708	1.152
22.00	0.0794	1.173
21.00	0.0891	1.196
20.00	0.1	1.222
19.00	0.1122	1.253
18.00	0.1259	1.288
17.00	0.1413	1.329
16.00	0.1585	1.377
15.00	0.1778	1.433
14.00	0.1995	1.499
13.00	0.2239	1.577
12.00	0.2512	1.671

Rf	RL (dB)	VSWR
0.005	46.02	1.010
0.010	40.00	1.020
0.015	36.48	1.030
0.020	33.98	1.041
0.025	32.04	1.051
0.030	30.46	1.062
0.035	29.12	1.073
0.040	27.96	1.083
0.045	26.94	1.094
0.050	26.02	1.105
0.055	25.19	1.116
0.060	24.44	1.128
0.065	23.74	1.139
0.070	23.10	1.151
0.075	22.50	1.162
0.080	21.94	1.174
0.085	21.41	1.186
0.090	20.92	1.198
0.095	20.45	1.210
0.100	20.00	1.222
0.105	19.58	1.235
0.110	19.17	1.247
0.115	18.79	1.260
0.120	18.42	1.273
0.125	18.06	1.286
0.130	17.72	1.299
0.135	17.39	1.312
0.140	17.08	1.326
0.145	16.77	1.339
0.150	16.48	1.353
0.155	16.19	1.367
0.160	15.92	1.381
0.165	15.65	1.395
0.170	15.39	1.410
0.175	15.14	1.424
0.180	14.89	1.439
0.185	14.66	1.454
0.190	14.42	1.469
0.195	14.20	1.484

VSWR = Voltage Standing Wave Ratio
Rf = Reflection Coefficient
RL = Return Loss

SUITABLE CABLES

The HUBER+SUHNER Coaxial Connectors are suitable to a wide range of different cable types, such as flexible cables, Semi-Rigid cables, corrugated copper tube cables, etc.

Please find hereafter the specifications of all cables (cable groups) mentioned within this catalogue.

The wide range of Flexible and Semi-Rigid Cables ...

... as well as Corrugated Copper Tube Cables

FLEXIBLE CABLES

Screen Type	Cable group		Cable type	Ω	Centre conductor			Insulation	
	Crimp	Clamp			mm/*inches*	Material	∅ mm/*inches*	Material	∅ mm/*inches*
single screen	● U0		K 01152-07	50	7 x 0.06/.002	CuAg	0.19/.007	PFA	0.52/.020
	● U1	● U1	K 01232-05	50	7 x 0.10/.004	CuStAg	0.30/.012	PTFE	0.83/.033
	● U1	● U1	RG 178 B/U	50	7 x 0.10/.004	CuStAg	0.30/.012	PTFE	0.83/.033
	● U1	● U1	EF 178	50	7 x 0.10/.004	CuStAg	0.30/.012	SPEX	0.82/.032
	● U1	● U1	RG 196 A/U	50	7 x 0.10/.004	CuStAg	0.30/.012	PTFE	0.83/.033
single screen	● U2	● U2	RG 174/U	50	7 x 0.16/.002	CuSt	0.48/.019	PE	1.50/.059
	● U2	● U2	RG 188A/U	50	7 x 0.18/.007	CuStAg	0.54/.021	PTFE	1.55/.061
	● U2	● U2	RG 316/U	50	7 x 0.18/.007	CuStAg	0.54/.021	PTFE	1.54/.061
	● U2	● U2	EF 316	50	7 x 0.18/.007	CuStAg	0.54/.021	SPEX	1.54/.060
	● U3		G 01130 HT	50	0.40/.016	Cu	0.40/.016	PE/HL	1.4-–1.9/.055–.075
double screen	● U4	● U4	G 02232 D	50	7 x 0.16/.006	Cu	0.49/.019	PE	1.50/.059
	● U4	● U4	K 02232 D	50	7 x 0.18/.007	CuStAg	0.54/.021	PTFE	1.54/.061
	● U4	● U4	K 02252 D*	50	7 x 0.18/.007	CuStAg	0.54/.021	PTFE	1.54/.061
	● U4	● U4	EF 316 D	50	7 x 0.18/.007	CuStAg	0.54/.021	SPEX	1.54/.061
single screen	● U5	● U5	RG 179 B/U	75	7 x 0.10/.004	CuStAg	0.30/.012	PTFE	1.53/.060
	● U5	● U5	EF 179	75	7 x 0.10/.004	CuStAg	0.30/.012	SPEX	1.55/.061
	● U5	● U5	RG 187 A/U	75	7 x 0.10/.004	CuStAg	0.30/.012	PTFE	1.53/.060
	● S5		S 02223-02	75	0.35 / .014	Cu	0.35 / .014	SPE	1.55 / .061
single screen		● U6	G 03133-06	75	7 x 0.14/.005	CuSt	0.42/.016	PE	2.50/0.98
double screen	● R6		G 02133 D-05	75	0.31/.012	Cu	0.31/.012	PE	1.95/0.78
single screen	● R7		G 02233	75	0.24/.009	CuSt	0.24/.009	PE	1.50/.059
single screen	● U7	● U7	G 03232	50	7 x 0.31/.012	Cu	0.93/.037	PE	2.95/.116
	● U7	● U7	GX 03272	50	19 x 0.18/.007	CuSn	0.90/.035	PEX	2.95/.116
	● U7	● U7	RG 58 C/U	50	19 x 0.18/.007	CuSn	0.90/.035	PE	2.95/.116
	● U7	● U7	RG 303/U	50	0.95/.037	CuStAg	0.95/.037	PTFE	2.95/.116
	● U8		S 03232-1	50	7 x 0.39/.015	Cu	1.17/.046	SPE	2.96/.116
double screen	● R8		K 02253 D-02	75	7 x 0.10/.004	CuStAg	0.30/.012	PTFE	1.55/.061
double screen	● U9	● U10	RG 142 B/U	50	0.95/.037	CuStAg	0.95/.037	PTFE	2.95/.116
	● U9	● U10	EF 142	50	0.95/.037	CuAg	0.95/.037	SPEX	2.95/.116
	● U9	● U10	RG 223/U	50	0.89/.035	CuAg	0.89/.035	PE	2.95/.116
	● U11	● U10	RG 400/U	50	19 x 0.19/.008	CuAg	1.00/.039	PTFE	2.95/.116
	● U11	● U10	EF 400	50	19 x 0.20/.008	CuAg	1.00/.039	SPEX	3.03/.119
single screen	● U12	● U12	G 03233	75	7 x 0.16/.006	Cu	0.48/.019	PE	2.95/.116
	● U13		G 03130 HT	75	0.50/.020	Cu	0.50/.020	PE/HL	3.0–3.4/.12–.13
double screen	● U14	● U14	G 03233 D	75	0.47/.019	CuAg	0.47/.019	PE	2.95/.116
double screen	● S16		S 04262 D	50	1.40/.055	CuAg	1.40/.055	SPE	3.78/.148

List of abbreviations

Cu	plain copper wire
CuAg	silvered copper wire
CuAg/CuAg	double screened silvered copper wire
CuAl	aluminium wire, copper plated
Cu/Cu	double screened plain copper wire
CuSn	copper wire, tin plated
CuSt	copper plated steel wire
CuStAg	silvered copper plated steel wire
FEP	fluorethylenepropylene
GSi	glass fibre braided and silicone varnish
HDPE	high-density polyethylene
HL	semiconducting layer

Screen		Jacket		Cable retention force	Recommended operating frequency range	Notes
Material	**∅ mm/*inches***	**Material**	**∅ mm/*inches***	**N/*lbs***		
CuAg CuAg CuAg CuAg CuAg	0.90/.035 1.30/.051 1.33/.052 1.35/.053 1.33/.052	PFA PVC FEP RADOX PFA	1.20/.047 1.80/.071 1.80/.071 1.84/.072 1.83/.072	13.9/3.1 32.7/7.3 32.7/7.3 32.7/7.3 32.7/7.3	1 GHz	
CuSn CuAg CuAg CuAg Cu	2.00/.079 2.00/.079 2.00/.079 2.05/.080 2.40/.095	PVC PFA FEP RADOX PVC	2.55/.100 2.60/.102 2.50/.098 2.52/.099 3.15/.124	43.5/9.7 54.4/12.1 54.4/12.1 54.4/12.1 54.4/12.1	1 GHz	
Cu/Cu CuAg/CuAg CuAg/CuAg CuAg/CuAg	2.0–2.5/.08 – .10 2.0–2.5/.08 – .10 2.0–2.5/.08 – .10 2.0–2.5/.08 – .10	PVC UL-PVC FEP RADOX	3.10/.122 3.00 /.118 3.00/.118 3.10/.122	119.7/26.7 108.8/24.3 108.8/24.3 108.8/24.3	5 GHz	* equivalent cable: RD 316
CuAg CuAg CuAg Cu	2.00/.079 2.13/.083 2.00/.079 2.00/.079	FEP RADOX PFA PVC	2.54/.100 2.54/.100 2.65/.104 2.55/.100	54.4/12.1 54.4/12.1 54.4/12.1 54.4/12.1	1 GHz	
CuSn	3.00/.118	PVC	3.90/.153	120.3/26.9	1 GHz	
CuSn/CuSn	2.40–2.85/.095–.112	PVC	3.60/.141	119.7/26.7	2 GHz	in acc. to BT CW 1383A-3002
Cu	2.00/.079	PVC	2.80/.110	54.4/12.1	1 GHz	
Cu CuAg CuSn CuAg Cu	3.60/.142 3.60/.142 3.60/.142 3.60/.142 3.60/.142	PVC Radox PVC FEP PVC	5.00/.197 4.95/.195 4.95/.195 4.30/.169 5.00/.197	128.7/28.7 128.7/28.7 128.7/28.7 128.7/28.7 128.7/28.7	1 GHz	
CuAg/CuAg	2.00–2.50/.08 – .10	FEP	3.00/.118	119.7/26.7	5 GHz	
CuAg/CuAg CuAg/CuAg CuAg/CuAg CuAg/CuAg CuAg/CuAg	3.6–4.25/.142–.167 3.54–4.20/.139–.165 3.6–4.20/.142–.165 3.6–4.20/.142–.165 3.6–4.15/.142–.163	FEP RADOX PVC FEP RADOX	4.95/.195 4.95/.195 5.40/.213 4.95/.195 5.10/.200	257.5/57.5 257.5/57.5 257.5/57.5 257.5/57.5 257.5/57.5	5 GHz	
Cu Cu	3.60/.142 4.00/.157	PVC PVC	5.00/.197 5.00/.197	128.7/28.7 128.7/28.7	1 GHz	
CuAg/CuAg	3.6–4.2/.14–.165	PVC	5.35/.211	257.5/57.5	2 GHz	
CuAg/CuAg	4.2–4.7/.165–.185	LSFH	5.70/.224	228.0/51.3	5 GHz	

List of abbreviations

LDPE	low-density polyethylene
LSFH	low smoke free halogene
PE	polyethylene
PEX	polyethylene, cross linked
PFA	perfluoralcoxy
PTFE	polytetrafluorethylene
PVC	polyvinylchloride
Radox	polymere, flame retardent
SPE	foam polyethylene
SPEX	foam polyethylene, cross linked
UL-PVC	polyvinylchloride, flame retardant

FLEXIBLE CABLES (CONT.)

Screen Type	Cable group: Crimp	Cable group: Clamp	Cable type	Ω	Centre conductor: mm/*inches*	Centre conductor: Material	Centre conductor: ∅ mm/*inches*	Insulation: Material	Insulation: ∅ mm/*inches*
single screen	● U16	● U15	GX 04273	75	7 x 0.21/.008	Cu	0.62/.024	PEX	3.75/.148
	● U16	● U15	RG 59 B/U	75	0.58/.022	CuSt	0.58/.022	PE	3.64/.143
	● U16	● U15	RG 62 A/U	93	0.62/.024	CuSt	0.62/.024	PE/Air	3.70/.146
	● U16	● U15	RG 302/U	75	0.64/.025	CuStAg	0.64/.025	PTFE	3.70/.146
	● U17	● U15	S 04263	75	0.83/.033	Cu	0.83/.033	SPE	3.70/.146
double screen	● U18	● U18	G 04233 D	75	0.58/.022	CuSt	0.58/.022	PE	3.64/.143
	● U18	● U18	G 04273 D	75	0.58/.022	CuSt	0.58/.022	PE	3.64/.143
single screen		● U19	G 05232	50	7 x 0.50/.020	Cu	1.50/.059	PE	4.80/.189
double screen		● U20	RG 212/U	50	1.40/.055	CuAg	1.40/.055	PE	4.70/.185
single screen	● U21	● U21	G 05273-01	75	7 x 0.28/.011	Cu	0.80/.032	PE	4.80/.189
		● U22	S 05273	75	1.07/.042	Cu	1.07/.042	SPE	4.80/.189
double screen		● U23	RG 6 A/U	75	0.73/.029	CuSt	0.73/.029	PE	4.80/.189
	● U24	● U23	G 05133 D	75	0.77/.030	Cu	0.77/.030	PE	4.78/.188
double screen	● S24		S 06162 D-02	50	2.05 / .080	CuAg	2.05 / .080	SPE	5.60 / .220
	● U25		S 06132 D	50	2.17/.085	Cu	2.17/.085	SPE	6.25/.246
double screen	● S26		S 06132D-10	50	7 x 0.75/.030	CuAg	2.25/.089	SPE	5.80/.228
single screen		● U28	GX 07272	50	7 x 0.75/.030	Cu	2.25/.089	PEX	7.25/.285
		● U28	RG 165/U	50	7 x 0.82/.032	CuAg	2.46/.097	PTFE	7.25/.285
	● U29	● U28	RG 213/U	50	7 x 0.75/.030	Cu	2.25/.089	PE	7.25/.285
	● U30	● U31	S 07232	50	2.68/.106	Cu	2.68/.106	SPE	7.25/.285
		● U31	S 07232-1	50	7 x 0.95/.037	Cu	2.85/.112	SPE	7.25/.285
	● U30	● U31	SX 07272	50	2.68/.106	Cu	2.68/.106	SPEX	7.30/.287
multiple screen	● S32		S 07262 BD	50	7 x 0.95/.037	CuAg	2.85/.112	SPE	7.35/.289
	● S32		SX 07272 BD	50	7 x 0.95/.037	CuAg	2.85/.112	SPE	7.35/.289
double screen	● U32	● U33	RG 214/U	50	7 x 0.75/.030	CuAg	2.25/.089	PE	7.28/.286
	● U32	● U33	RG 214 hiflex	50	19 x 0.45/.017	CuAg	2.25/.089	PE	7.30/.287
	● U33	● U33	RG 225/U	50	7 x 0.79/.031	CuAg	2.37/.093	PTFE	7.25/.285
	● U33	● U33	RG 393/U	50	7 x 0.79/.031	CuAg	2.37/.093	PTFE	7.25/.285
	● U33	● U33	EF 393	50	7 x 0.82/.032	CuAG	2.46/.096	SPEX	7.30/.287
single screen	● U34	● U35	RG 11 A/U	75	7 x 0.40/.016	CuSn	1.20/.047	PE	7.25/.285
		● U35	RG 63 B/U	125	0.60/.024	CuSt	0.60/.024	PE/Air	7.25/.285
double screen	● U36	● U37	RG 216/U	75	7 x 0.40/.016	CuSn	1.20/.047	PE	7.25/.285
double screen		● U38	RG 217/U	50	2.70/.106	Cu	2.70/.106	PE	9.40/.370
	● S39		S 10162 B-11	50	3.78/.149	CuAl	3.78/.149	SPE	9.75/.384
	● S39		S 10172 B-11	50	3.78/.149	CuAl	3.78/.149	SPE	9.75/.384
single screen foil		● U39	G 12232	50	7 x 1.13/.044	Cu	3.39/.133	PE	11.50/.435
		● U40	S 12272-4	50	4.20/.165	CuAl	4.20/.165	SPE	11.50/.435
single screen		● U44	RG 218/U	50	5.00/.197	Cu	5.00/.197	PE	17.30/.681

List of abbreviations:

Cu	plain copper wire
CuAg	silvered copper wire
CuAg/CuAg	double screened silvered copper wire
CuAl	aluminium wire, copper plated
Cu/Cu	double screened plain copper wire
CuSn	copper wire, tin plated
CuSt	copper plated steel wire
CuStAg	silvered copper plated steel wire
FEP	fluorethylenepropylene
GSi	glass fibre braided and silicone varnish
HDPE	high-density polyethylene
HL	semiconducting layer

Screen		Jacket		Cable retention force	Recommended operating frequency range	Notes
Material	**∅ mm/*inches***	**Material**	**∅ mm/*inches***	**N/*lbs***		
CuAg Cu Cu CuAg Cu	4.45/.175 4.50/.177 4.40/.173 4.30/.169 4.35/.171	Radox PVC PVC FEP LSFH	6.10/.240 6.10/.240 6.10/.240 5.10/.201 6.10/.240	183.7/41.0 171.4/38.3 171.4/38.3 128.7/28.7 147.1/32.9	1 GHz	
CuAg/CuAg CuAg/CuAg	4.45–5.2/.175–.204 4.45–5.2/.175–.204	PVC Radox	6.70/.264 6.70/.264	367.3/82.0 367.3/82.0	2 GHz	
Cu	5.60/.220	PVC	7.40/.291	220.4/49.2	1 GHz	
CuAg/CuAg	5.45–6.2/.214–.244	PVC	8.45/.333	440.8/98.4	5 GHz	
Cu Cu	5.60/.220 5.50/.216	PE PE	6.80/.267 6.90/.272	280.4/49.2 250.7/56.0	1 GHz	
CuAg/Cu Cu/Cu	5.4–6.2/.212–.244 5.5–6.3/.216–.248	PVC PVC	8.45/.333 8.00/.315	440.8/98.4 477.5/106.6	2 GHz	
CuAg/CuAg CuSn/Alu/Cu/Sn/Alu	6.1–6.75/.24–.266 7.2–8.28/.283–.326	LSFH PVC	7.90/.311 10.30/.406	440.8/98.4 581.8/129.9	5 GHz	
CuAg/CuAg	6.55/7.25 .258/.285	PVC	8.95/.352		5 GHz	
CuAg CuAg Cu Cu Cu CuAg	8.15/.321 8.00/.315 8.10/.319 8.15/.321 8.15/.321 8.10/.319	Radox PTFE/GSi PVC PVC PVC Radox	10.30/.406 10.30/.406 10.30/.406 10.30/.406 10.30/.406 10.30/.406	423.1/94.5 250.7/56.0 423.1/94.5 423.1/94.5 423.1/94.5 423.1/94.5	1 GHz	
CuAg/Cu/CuSn CuAg/Cu/CuSn	8.00–8.10–9.00/ .315–.319–.354	LSFH Radox	10.80/.425 10.80/.425	661.1/148.6 661.1/148.6	5 GHz	*
CuAg/CuAg CuAg/CuAg CuAg/CuAg CuAg/CuAg CuAg/CuAg	8.0–8.70/.315–.342 8.0–8.70/.315–.342 8.0–8.75/.315–.344 8.0–8.75/.315–.344 8.0–8.75/.315–.344	PVC PVC PTFE/GSi FEP RADOX	10.80/.425 10.80/.425 10.90/.429 9.90/.390 10.10/.397	477.5/106.6 477.5/106.6 553.7/123.7 477.5/106.6 477.5/106.6	5 GHz	
Cu Cu	8.15/.321 8.10/.319	PVC PVC	10.30/.406 10.30/.406	423.1/94.5 423.1/94.5	1 GHz	
Cu/Cu	8.0–8.75/.32–.344	PVC	10.80/.425	587.7/131.3	5 GHz	
Cu/Cu Cu (foil)/Cu (braid) Cu (foil)/Cu (braid)	10.3–11.2/.406–.441 9.85–10.7/.388–.421 9.85–10.7/.388–.421	PVC LSFH PE	13.85/.545 12.9/.508 12.9/.508	952.0/212.6 317.3/70.9 317.3/70.9	5 GHz 7.5 GHz 7.5GHz	
Cu Cu	12.40/.488 12.50/.492	PVC PE	15.00/.591 15.00/.591	634.7/141.8 317.3/70.9	1 GHz 5 GHz	
Cu	18.55/.730	PVC	22.10/.870	1377.3/307.6	1 GHz	

List of abbreviations:

* double screened with helically wrapped foil

LDPE	low-density polyethylene
LSFH	low smoke free halogene
PE	polyethylene
PEX	polyethylene, cross linked
PFA	perfluoralcoxy
PTFE	polytetrafluorethylene
PVC	polyvinylchloride
Radox	polymere, flame retardent
SPE	foam polyethylene
SPEX	foam polyethylene, cross linked
UL-PVC	polyvinylchloride, flame retardant

CABLE GROUPS V,W: VARIOUS CABLES

Screen Type	Cable group: Crimp	Cable group: Clamp	Cable type	Ω	Centre conductor: mm/*inches*	Centre conductor: Material	Centre conductor: ∅ mm/*inches*	Insulation: Material	Insulation: ∅ mm/*inches*
symmetric screened cable	● V1		RG 108 A/U	78	7 x 0.32/.013	CuSn	2 x 0.96/.038	PE	2.0–4.0/.08–.16
		● V2	G 05730	95	7 x 0.28/.011	Cu	2 x 0.84/.033	PE	1.7–4.8/.07–.19
triaxial cable		● W1	G 02332	50	7 x 0.16/.006	Cu	0.48/.019	PE	1.50/.059
triaxial cable		● W2	G 03332	50	7 x 0.31/.012	Cu	0.93/.037	PE	2.95/.116
triaxial cable		● W2	G 03333	75	7 x 0.16/.006	Cu	0.48/.019	PE	2.95/.116

SEMI-RIGID CABLES

Cable group: Crimp	Cable group: Soldered	Cable group: Clamp	Cable type	Ω	Centre conductor: mm/*inches*	Centre conductor: Material	Centre conductor: ∅ mm/*inches*	Insulation: Material	Insulation: ∅ mm/*inches*
	● Y1		EZ 34	50	0.20/.008	CuStAg	0.20/.008	PTFE	0.66/.026
	● Y2		EZ 47	50	0.29/.011	CuStAg	0.29/.011	PTFE	0.94/.037
	● Y2		Sucoform 47-Cu	50	0.31 /.012	CuAg	0.31 /.012	PTFE	0.94/.037
● Y3	● Y3		EZ 86	50	0.51/.020	CuStAg	0.51/.020	PTFE	1.68/.066
	● Y4		EZ 86-75	75	0.29/.011	CuStAg	0.29/.011	PTFE	1.73/.068
● Y5	● Y5		EZ 141	50	0.92/.036	CuStAg	0.92/.036	PTFE	2.98/.117
	● Y6		EZ 141-75	75	0.51/.020	CuStAg	0.51/.020	PTFE	2.98/.117
		● Y7	EZ 250	50	1.63/.064	CuAg	1.63/.064	PTFE	5.31/.209
	● Y10		EZ 118TP	50	0.81/.032	CuAg	0.81/.032	PTFE	2.31/.091
	● Y11		Sucoform 86	50	0.53/.021	CuStAg	0.53/.021	PTFE	1.65/.065
	● Y11		Multiflex 86	50	0.47/.018	CuAg	0.47/.018	PTFE	1.48/.058
	● Y12		Sucoform 141	50	0.95/.037	CuStAg	0.95/.037	PTFE	2.95/.116
	● Y12		Multiflex 141	50	0.92/.037	CuAg	0.92/.037	PTFE	2.96/.117
		● Y13	Sucoform 250	50	1.64/.064	CuAg	1.64/.064	PTFE	5.27/.207
	● Y14		Sucoform 250-1	50	1.67/.065	CuAg	1.67/.065	PTFE	5.24/.206

FOAM DIELECTRIC CORRUGATED COPPER TUBE CABLES

Screen Type	Cable group: Crimp	Cable group: Clamp	Cable type	Ω	Centre conductor: Material	Centre conductor: mm/*inches*	Insulation: Material	Insulation: ∅ mm/*inches*
corrug. copper tube cable		● M5	SUCOFEED $^1/_4$"HF	50	AlCu	1.90/.074	SPE	4.40/.173
		● M6	CF14-50	50	Cu	2.40/.094	SPE	6.00/.236
		● M7	SUCOFEED $^3/_8$"HF	50	AlCu	2.80/.110	SPE	6.90/.272
		● M8	LDF2-50 $^3/_8$"	50	AlCu	3.10/.122	SPE	8.70/.342
		–	EFX2-50 $^3/_8$"	50	AlCu	3.00/.118	SPE	8.50/.335
		● M9	SUCOFEED $^1/_2$"HF	50	AlCu	3.60/.142	SPE	8.70/.343
		● M12	SUCOFEED $^1/_2$"	50	AlCu	4.80/.189	SPE	11.90/.469
		● M23	SUCOFEED $^7/_8$"	50	Cu	9.00/.354	SPE	22.00/.866
		● M24	SUCOFEED $^7/_8$"HF	50	Cu	9.40/.370	SPE	22.40/.882
		● M25	SUCOFEED $^7/_8$"LA	50	Cu	9.50/.374	SPE	22.70/.894
		● M32	SUCOFEED1$^1/_4$"	50	Cu	13.00/.511	SPE	32.00/1.259
		● M42	SUCOFEED1$^5/_8$"	50	Cu	17.30/.681	SPE	42.00/1.654

List of abbreviations see pages 30 and 31

Screen		Jacket		Cable retention force	Recommended operating frequency range	Notes
Material	**∅ mm/*inches***	**Material**	**∅ mm/*inches***	**N/*lbs***		
CuSn Cu	4.70/.185 5.60/.220	PVC PVC	6.00/.236 7.40/.291	110.4/24.8 220.4/49.5	–	
Cu Cu	2.00/.079 3.05/.120	PVC PVC	2.80/.110 4.25/.167	130.6/29.4	1 GHz	
Cu Cu	3.60/.142 5.75/.226	PVC PVC	5.00/.197 7.35/.289	294.3/66.2	1 GHz	
Cu Cu	3.60/.142 5.75/.226	PVC PVC	5.00/.197 7.35/.289	294.3/66.2	1 GHz	

Screen		Jacket		Cable retention force		Notes
Material	**∅ mm/*inches***	**Material**	**∅ mm/*inches***	**N/*lbs***		
Cu	0.86/.034			23.9/5.3		
Cu	1.19/.047			41.8/9.3		
CuSn	1.19/.047			26.1/5.87		
Cu	2.20/.086			158.5/35.6		
Cu	2.20/.086			139.5/31.2		
Cu	3.58/.141			309.1/69.5		
Cu	3.58/.141			309.1/69.5		
Cu	6.35/.250			952.4/212.7		
Cu-TP	2.95/.116			246.0/54.9		
CuSn	2.20/.086			100.0/22.5		
CuAg	2.20/.086	FEP	2.65/.104	160.0/36.0		
CuSn	3.58/.141			100.0/22.5		
CuAg	3.58/.141	FEP	4.14/.163	160.0/36.0		
CuSn	6.05/.238			100.0/22.5		
CuSn	6.30/.248			100.0/22.5		

Screen		Jacket		Cable retention force		Notes
Material	**∅ mm/*inches***	**Material**	**∅ mm/*inches***	**N/*lbs***		
Cu	6.40/.252	LDPE	7.70/.303	100.0/22.5		
Cu	7.50/.295	PE	10.00/.394	100.0/22.5		
Cu	9.50/.374	LDPE	10.80/.425	150.0/.33.7		
Cu	9.70/.381	PE	11.00/.433	150.0/33.7		
Cu	9.70/.381	PE	11.20/.441	n.a.		
Cu	12.10/.476	LDPE	13.40/.528	200.0/45.0		
Cu	13.70/.539	LDPE	16.00/.630	200.0/45.0		
Cu	24.70/.972	LDPE	27.75/1.093	700.0/157.4		
Cu	25.00/.984	LDPE	27.50/1.083	700.0/157.4		
Cu	25.40/1.000	LDPE	27.90/1.098	700.0/157.4		
Cu	35.70/1.406	HDPE	39.50/1.550	> 700.0/157.4		
Cu	46.20/1.890	HDPE	50.00/1.968	> 700.0/157.4		

List of abbreviations see pages 30 and 31

CROSS REFERENCE LIST: NATIONAL STANDARDS - HUBER+SUHNER® CABLE GROUPS:

BS 2316	Group		**CCTU 10-01-A**	Group		**VG 95216**	Group	
(British Standard)	Cable entry **crimp**	Cable entry **clamp**	**(French Standard)**	Cable entry **crimp**	Cable entry **clamp**	**(German Standard)**	Cable entry **crimp**	Cable entry **clamp**
URM 43	● U7	● U7	KX 3A	● U2	● U2	T0, 3L/1	● U1	● U1
URM 67	● U29	● U28	KX 6A	● U16	● U15	T0, 5L/2	● U2	● U2
URM 72	–	● U7	KX 15	● U7	● U7	T2L/7	–	● U28
URM 76	● U7	● U7	KX 21A	● U1	● U1	P2L/7	● U29	● U28
URM 90	● U16	● U15	KX 22A	● U2	● U2			
URM 95	● U2	● U2	KX 23	● U11	● U10			
URM 102	–	● U28						
URM 110	● U1	● U1						
URM 112	● U32	● U31						

SERIES MMBX
MICRO MINIATURE BOARD CONNECTORS

DESCRIPTION

Modularity with a minimum space requirement is demanded for the existing and coming generation of systems (GSM 900 / 1800 / 1900, PCS, WCDMA, UMTS). To achieve this for all different systems, the smallest possible components must be used also for interconnections.
In order to reduce the variety of products and to achieve standardised systems (in other words: modularity), the HUBER+SUHNER Series MMBX™ (Micro Miniature Board Connector) contains a range of board and cable connectors which require a minimum of space. It offers all the necessary characteristics to obtain a unified design of the various systems.

CONTENTS PAGE

INTERFACE DIMENSIONS

Slide-Side

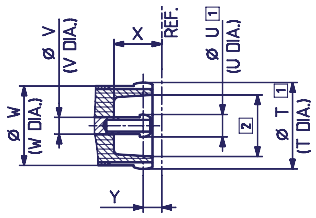

Snap-Side

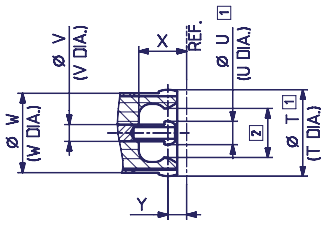

INTERFACE DIMENSIONS (MM / *INCHES*)

Adaptors Within-Series

	min. / max. mm	*min. / max. inches*
T	3.70 nom.	.146 nom.
U	0.95 nom.	.037 nom.
V	0.70 nom.	.028 nom.
W	3.65 nom.	.144 nom.
X	2.05 nom.	.081 nom.
Y	0.80 nom.	.032 nom.

1 Slotted and flared to meet electrical and mechanical requirements

2 Dimension to meet electrical and mechanical requirements

IP rating (interface, mated) IP50

Jack (female)

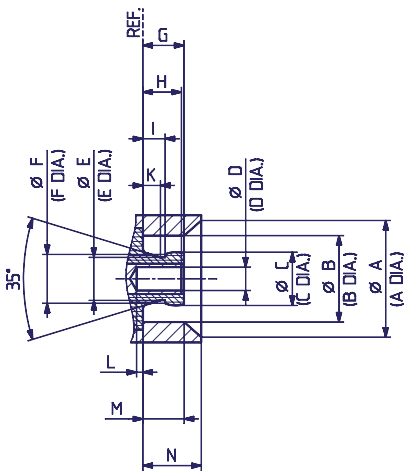

Plug (male)

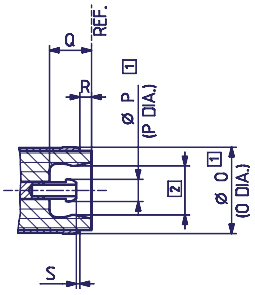

MMBX Connectors:

	min. mm	*min. inches*	max. mm	*max. inches*
A	5.00 nom.	.197 nom.	5.00 nom.	.197 nom.
B	3.68	.145	3.71	.146
C	2.25	.089	2.30	.091
D	0.98	.039	1.01	.040
E	1.85 nom.	.073 nom.	1.85 nom.	.073 nom.
F	2.10 nom.	.083 nom.	2.10 nom.	.083 nom.
G	—	—	1.80	.071
H	1.55	.061	1.75	.069
I	0.90	.035	—	—
K	0.75 nom.	.030 nom.	0.75 nom.	.030 nom.
L	0	0	—	—
M	1.45	.057	—	—
N	2.50 nom.	.098 nom.	2.50 nom.	.098 nom.
O	3.70 nom.	.146 nom.	3.70 nom.	.146 nom.
P	0.95 nom.	.037 nom.	0.95 nom.	.037 nom.
Q	1.85 nom.	.073 nom.	1.85 nom.	.073 nom.
R	0.50 nom.	.020 nom.	0.50 nom.	.020 nom.
S	0.10 nom.	.004 nom.	0.10 nom.	.004 nom.

1 Slotted and flared to meet electrical and mechanical requirements

2 Dimension to meet electrical and mechanical requirements

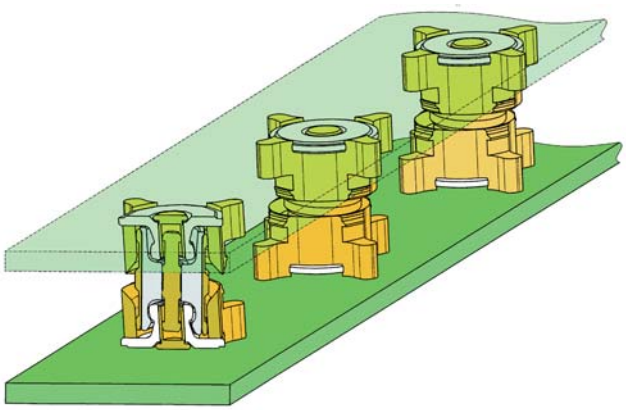

Direct interconnection with excellent electrical and mechanical properties.

TECHNICAL DATA OF CABLE CONNECTORS

ELECTRICAL DATA	CECC 22000	REQUIREMENTS
for cable groups		Y 11, U2, U4
Impedance		50 Ω
Frequency range		DC ... 12.4 GHz
Dielectric withstanding voltage (at sea level)	4.4.5	750 V rms, 50 Hz
Working voltage (at sea level) - unmated	IEC 169-1 14.6.1	250 V rms, 50 Hz (calculated)
Working voltage (at 21'000 m/*70'000 ft.*) - mated and unmated	Appendix C	42 VAC 50 Hz (calculated)
Insulation resistance	4.4.4	≥ 1 GΩ
Contact resistance - centre contact - outer contact	 4.4.2 4.4.3	 ≤ 5 mΩ ≤ 1 mΩ

MECHANICAL DATA	CECC 22000	REQUIREMENTS
Engagement force	4.5.4	max. 30 N / *max. 6.7 lbs*
Disengagement force	4.5.4	8 - 30 N / *1.8 - 6.7 lbs*
Contact captivation	4.5.2	≥ 10 N / *2.3 lbs*
Cable retention force	4.5.5	see pages 28 – 34
Durability (matings)	4.7.1	100

ENVIRONMENTAL DATA	CECC 22000 TEST CONDITIONS	EQUIVALENT MIL TEST CONDITIONS
Temperature range		*– 55° C ... + 155° C / – 67 °F ... + 311 °F*
Climatic category	→ *55 / 155 / 21*	
Thermal shock	4.6.7 → IEC 68-2-14 Na	MIL-STD-202, Method 107 G, Condition B1
Moisture resistance	4.6.6 → IEC 68-2-3 Ca	MIL-STD-202, Method 106 F
Corrosion	4.6.10 → IEC 68-2-11 Ka	MIL-STD-202, Method 101, Condition B
Vibration	4.6.3 → IEC 68-2-6 Fc	MIL-STD-202, Method 204 D, Condition A

MATERIAL DATA		
CONNECTOR PARTS	MATERIAL	PLATING
Centre contact	copper-beryllium alloy	SUCOPRO /gold
Outer contact	copper-beryllium alloy	SUCOPRO
Body	brass	SUCOPRO
Crimp ferrules	E-copper	SUCOPRO/gold
Insulators	PTFE / PFA	

TECHNICAL DATA OF PCB CONNECTORS - BOARD-TO-BOARD

ELECTRICAL DATA	CECC 22000	REQUIREMENTS Nominal PCB distance 6.7 mm/.264 *in.*	REQUIREMENTS Nominal PCB distance 11.7 mm/.461 *in.*
Impedance		50 Ω	
Frequency range		DC ... 12.4 GHz	
Dielectric withstanding voltage (at sea level)	4.4.5	1 kV rms, 50 Hz	
Working voltage (at sea level)	IEC 169-1 11.6.1	≤ 330 V rms, 50 Hz	
Insulation resistance	4.4.4	≥ 1 GΩ	
Contact resistance - centre contact - outer contact	 4.4.2 4.4.3	 ≤ 5 mΩ ≤ 1 mΩ	

MECHANICAL DATA	CECC 22000	REQUIREMENTS 6 SLOTS	REQUIREMENTS 4 SLOTS
Engagement force (Slideside)	4.5.4	< 15 N / *3.4 lbs*	< 20 N / *4.5 lbs*
Disengagement force (Slideside)	4.5.4	< 15 N / *3.4 lbs*	< 20 N / *4.5 lbs*
Contact captivation	4.5.2	10 N / *2.3 lbs*	
Durability (matings)	4.7.1	100	

RETURN LOSS	REQUIREMENTS		
Nominal board-to-board distance	6.7 mm / *.2638 in.*	11.7 mm / *.4606 in.*	20.0 mm / *.7874 in.*
Typical return loss	board-to-board = two PCB-connector + one adaptor (without termination to PCB)		
- up to 2.5 GHz - 2.5 up to 6 GHz	26 dB 25 dB	26 dB 19 dB	26 dB 19 dB

PROCESSING DATA	REQUIREMENTS
Adherent to the print - shearing - pulling (vertical to PCB)	 150 N / *33.7 lbs* 150 N / *33.7 lbs*

MATERIAL DATA		
CONNECTOR PARTS	**MATERIAL**	**PLATING**
Centre contact	brass	SUCOPRO / gold
Outer contact	bronze	SUCOPRO
Body	brass	SUCOPRO
Insulators	LCP / PTFE / PFA	

ENVIRONMENTAL DATA	CECC 22000 TEST CONDITIONS	EQUIVALENT MIL TEST CONDITIONS
Temperature range		*– 55° C ... + 155° C / – 67 °F ... + 311 °F*
Climatic category	→ *55 / 155 / 21*	
Thermal shock	4.6.7 → IEC 68-2-14 Na	MIL-STD-202, Method 107 G, Condition B1
Moisture resistance	4.6.6 → IEC 68-2-3 Ca	MIL-STD-202, Method 106 F
Corrosion	4.6.10 → IEC 68-2-11 Ka	MIL-STD-202, Method 101, Condition B
Vibration	4.6.3 → IEC 68-2-6 Fc	MIL-STD-202, Method 204 D, Condition A

TECHNICAL DATA OF ADAPTORS BETWEEN SERIES

ELECTRICAL DATA	CECC 22000	REQUIREMENTS		
Impedance		50 Ω		
Frequency range		DC ... 12.4 GHz		
Typical return loss (mated pair)		DC – 2.5 GHz 32 dB	2.5 – 6 GHz 30 dB	6 – 12.4 GHz 16 dB
Dielectric withstanding voltage (at sea level)	4.4.5	1 kV rms, 50 Hz		
Working voltage (at sea level)	IEC 169-1 11.6.1	≤ 330 V rms, 50 Hz		
Insulation resistance	4.4.4	≥ 1 GΩ		
Contact resistance - centre contact - outer contact	 4.4.2 4.4.3	 ≤ 5 mΩ ≤ 1 mΩ		

MECHANICAL DATA	CECC 22000	REQUIREMENTS
Engagement force (MMBX)	4.5.4	max. 30 N / *max. 6.7 lbs*
Disengagement force (MMBX)	4.5.4	8 - 30 N / *1.8 - 6.7 lbs*
Durability (matings)	4.7.1	500

MATERIAL DATA		
CONNECTOR PARTS	**MATERIAL**	**PLATING**
MMBX centre contact	copper-beryllium alloy	SUCOPRO / gold
MMBX outer contact	brass / copper-beryllium	SUCOPRO
MMBX body	brass / copper-beryllium	SUCOPRO
MMBX insulators	LCP / PTFE / PFA	

ENVIRONMENTAL DATA	CECC 22000 TEST CONDITIONS	EQUIVALENT MIL TEST CONDITIONS
Temperature range		*– 55° C ... + 155° C / – 67 °F ... + 311 °F*
Climatic category	→ *55 / 155 / 21*	
Thermal shock	4.6.7 → IEC 68-2-14 Na	MIL-STD-202, Method 107 G, Condition B1
Moisture resistance	4.6.6 → IEC 68-2-3 Ca	MIL-STD-202, Method 106 F
Corrosion	4.6.10 → IEC 68-2-11 Ka	MIL-STD-202, Method 101, Condition B
Vibration	4.6.3 → IEC 68-2-6 Fc	MIL-STD-202, Method 204 D, Condition A

Some connectors may have a specification that differs from the above mentioned data.

The products are designed and guaranteed to pass the above mentioned test procedures. Any additional or different requirement arising from specific applications or environmental conditions which is not covered by these test procedures is subject to request.

MMBX APPLICATION INSTRUCTION FOR PCB AND PANEL DISTANCES

The MMBX connector range offers a wide variety of interconnection solutions for blind mate PCB and panel applications. The formulas below provides a guideline to help to quickly determine; the board to board distance (x) for a combination of two board connectors and an adaptor, the minimum board to board or panel distance and the required adaptor length (a).

The parameters used in these formulas can be found on the MMBX connector outline drawings.

Example for board to board connection

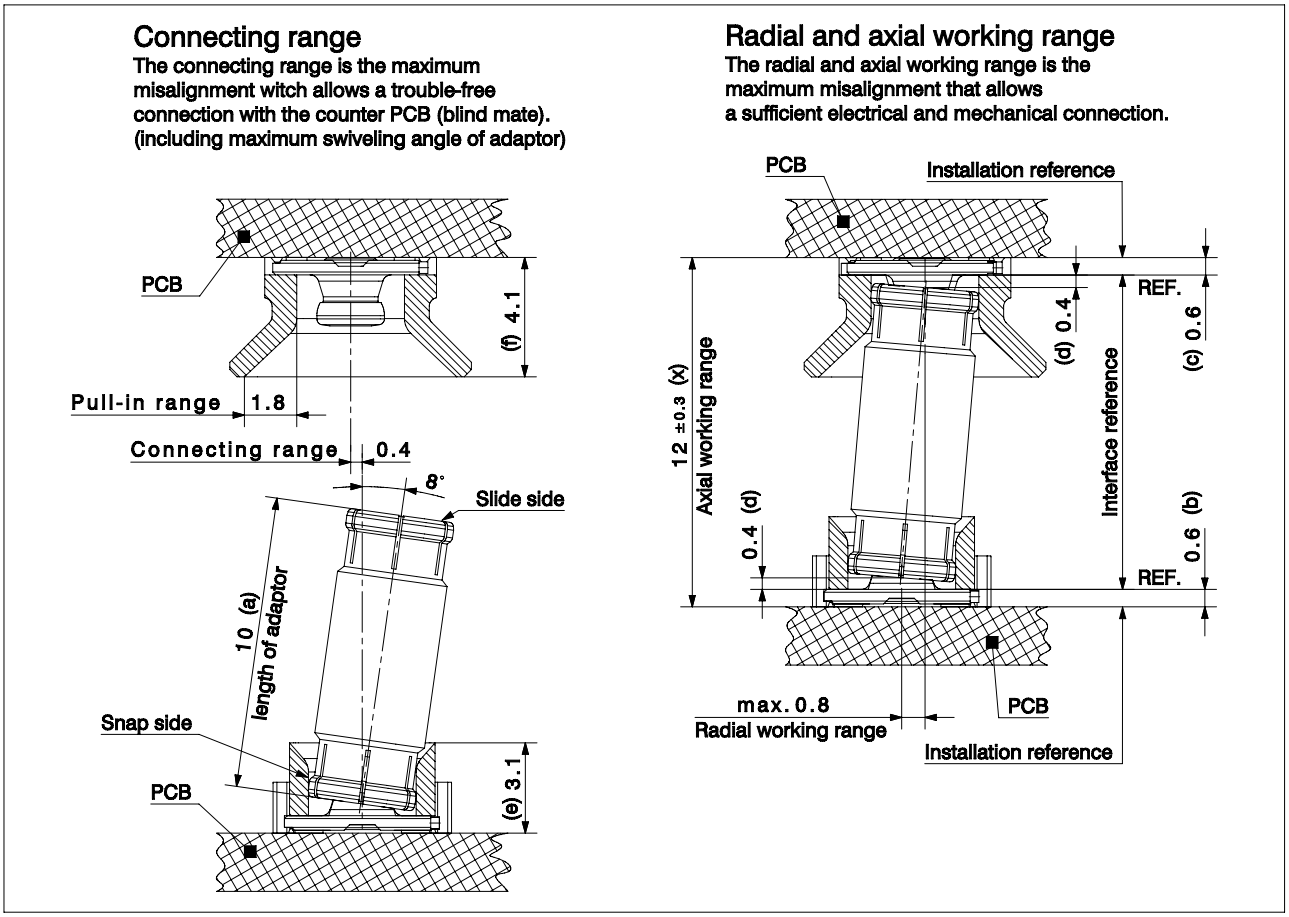

Formula

Distance x = a + b + c + (2*d)
Min. distance x = e + f + 0.5mm
Adapter length a = x - b - c - (2*d)

Variables

x = Board to board distance
a = adaptor length
b = interface reference connector
c = interface reference connector
d = gap for adaptor movement
e = height connector
f = height connector

Calculation of example

Board to board distance x = a + b + c + (2*d) = 10 mm + 0.6 mm + 0.6 mm + (2*0.4 mm) = 12 mm
Min. board to board distance x = e + f + 0.5 mm = 3.1 mm + 4.1 mm + 0.5 mm = 7.7 mm
Adapter length a = x - b - c - (2*d) = 12 mm - 0.6 mm - 0.6 mm - (2*0.4 mm) = 10 mm

Example for panel to panel connection

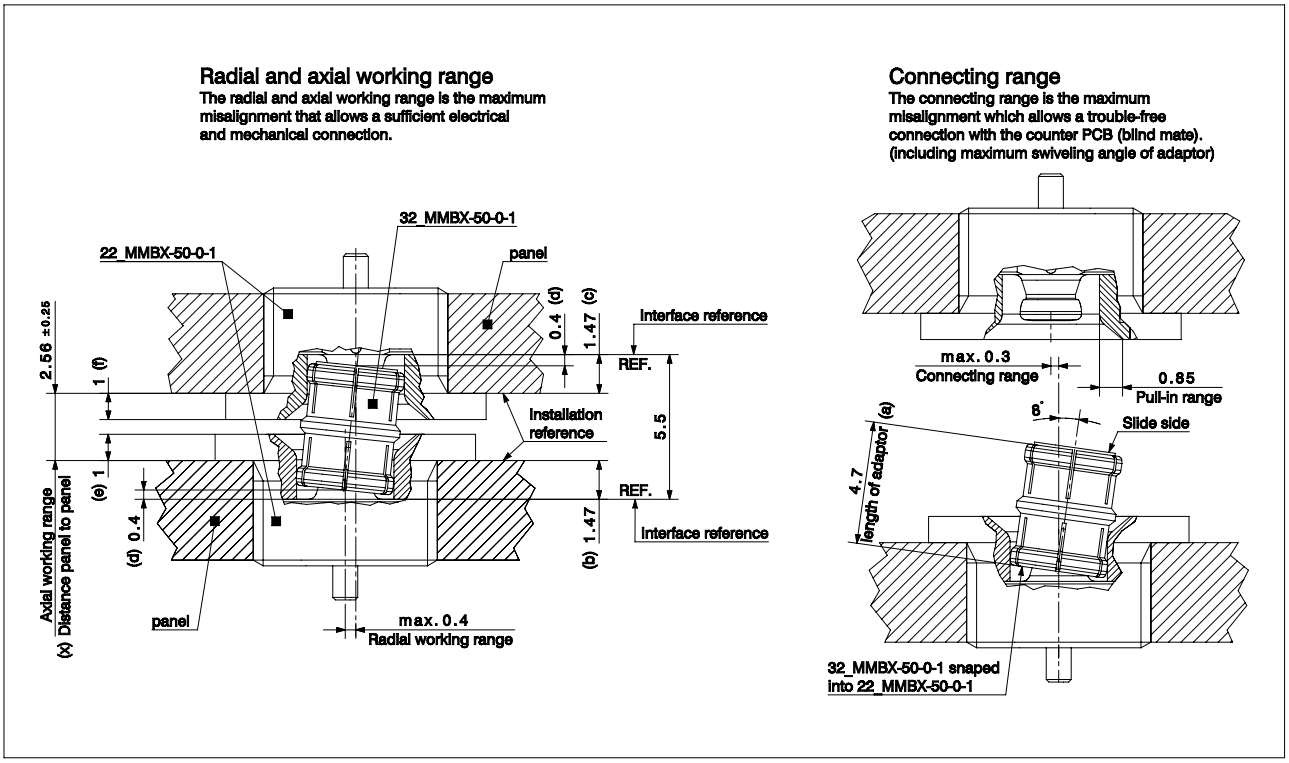

Note: For panel connectors the interface reference (b, c) needs to be subtracted.

Calculation of example

Panel to panel distance x = a - b - c + (2*d) = 4.7 mm - 1.47 mm - 1.47 mm + (2*0.4 mm) = 2.56 mm
Min. panel to panel distance x = e + f + 0.5 mm = 1 mm + 1 mm + 0.5 mm = 2.5 mm
Adapter length a = x + b + c - (2*d) = 2.56 mm + 1.47 mm + 1.47 mm - (2*0.4 mm) = 4.7 mm

CABLE CONNECTORS

Straight cable plugs (male)

> for HUBER+SUHNER® MULTIFLEX

> cable entry soldered

> centre contact soldered

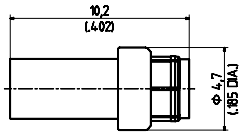

HUBER+SUHNER type	Item no.	Cable group (example)	Packaging	Assembly instruction
11_MMBX-50-2-4/111_NE	**84026769**	Y11 (Multiflex 86)	single	27534
11_MMBX-50-2-4/111_NH	**23033280**	Y11 (Multiflex 86)	bulk 100 pcs.	27534

> for flexible cables

> HUBER+SUHNER® full crimp

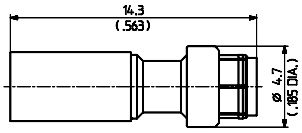

Fig. 1

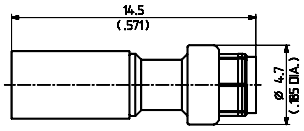

Fig. 2

HUBER+SUHNER type	Item no.	Cable group (example)	Packaging	Assembly instruction	Crimp insert	Fig.
11_MMBX-50-1-1/111_NE	**23001743**	U1 (EF 178)	single	27350	0.54 / A	1
11_MMBX-50-2-1/111_NE	**23001745**	U2 (EF 316)	single	27351	1 / A	2
11_MMBX-50-2-2/111_NE	**23001744**	U4 (EF 316 D)	single	27351	1 / A	2

Right angle cable plugs (male)

> for microwave cables

> cable entry soldered

> centre contact soldered

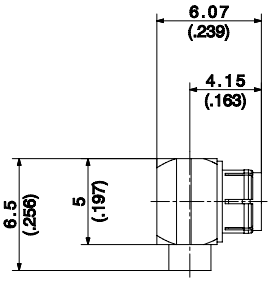

Fig. 1

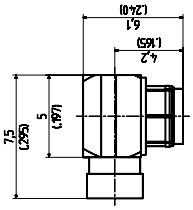

Fig. 2

HUBER+SUHNER type	Item no.	Cable group (example)	Packaging	Assembly instruction	Fig.
16_MMBX-50-1-2/111_NH	**21000174**	Y2 (EZ 47)	bulk 100 pcs.	0000247073	1
16_MMBX-50-2-4/111_NE	**84026740**	Y11 (Multiflex 86)	single	27533	2
16_MMBX-50-2-4/111_NH	**23033281**	Y11 (Multiflex 86)	bulk 100 pcs.	27533	2

Cable groups see page 28 | Assembly tools see page 385 | Mounting holes see page 412

> for flexible cables

> cable entry crimp

> centre contact soldered

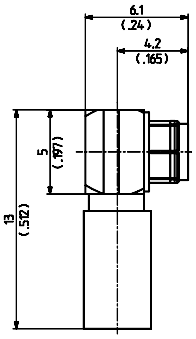

HUBER+SUHNER type	Item no.	Cable group (example)		Packaging	Assembly instruction	Crimp insert
16_MMBX-50-1-1/111_NE	**23001748**	U1	(EF 178)	single	27352	A
16_MMBX-50-2-1/111_NE	**23001747**	U2	(EF 316)	single	27352	A
16_MMBX-50-2-1/111_NH	**84018554**	U2	(EF 316)	bulk 100 pcs.	27352	A
16_MMBX-50-2-2/111_NE	**23001746**	U4	(EF 316 D)	single	27352	A
16_MMBX-50-2-2/111_NH	**84028931**	U4	(EF 316 D)	bulk 100 pcs.	27352	A

RECEPTACLES WITH SOLDER END

Receptacles, jacks (female)

> bulkhead mounted

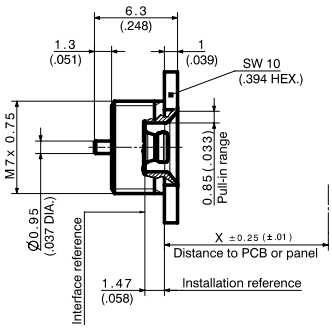

Fig. 1

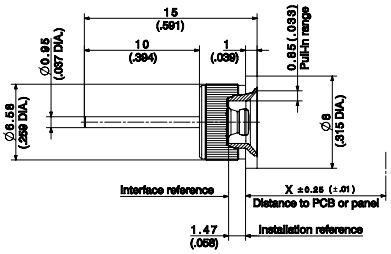

Fig. 2

HUBER+SUHNER type	Item no.	Packaging	Assembly style	Fig.
22_MMBX-50-0-1/111_NE	**23008312**	single	screwed-in	1
22_MMBX-50-0-2/111_NY	**84005177**	bulk 100 pcs.	pressed-in	2

Cable groups see page 28 | Assembly tools see page 385 | Mounting holes see page 412

PCB CONNECTORS

Straight PCB plugs (male)

> surface mount type SMT

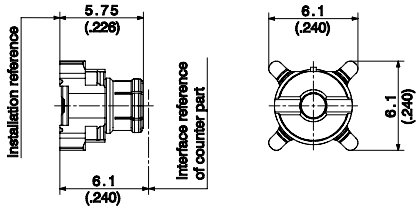

HUBER+SUHNER type	Item no.	Packaging	Soldering pad	Notes
81_MMBX-S50-0-1/111_NM	**23001780**	tape and reel	ML 122	
81_MMBX-S50-0-1/111_NH	**23001781**	bulk 100 pcs.	ML 122	
81_MMBX-S50-0-1/111_NE	**23001782**	single	ML 122	

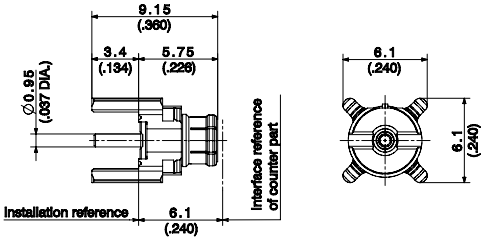

Fig. 1

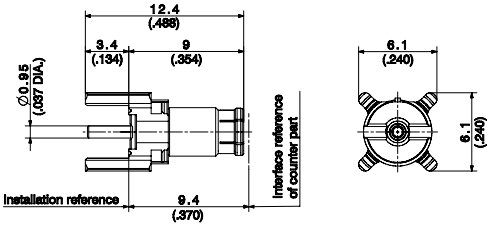

Fig. 2

HUBER+SUHNER type	Item no.	Packaging	Mounting hole	Notes	Fig.
81_MMBX-50-0-2/111_NM	**23001776**	tape and reel	ML 15		1
81_MMBX-50-0-2/111_NH	**23001778**	bulk 100 pcs.	ML 15		1
81_MMBX-50-0-2/111_NE	**23001779**	single	ML 15		1
81_MMBX-50-0-11/111_NM	**23028072**	tape and reel	ML 15		2

Cable groups see page 28 | Assembly tools see page 385 | Mounting holes see page 412

Straight PCB jacks (female)

> surface mount type SMT

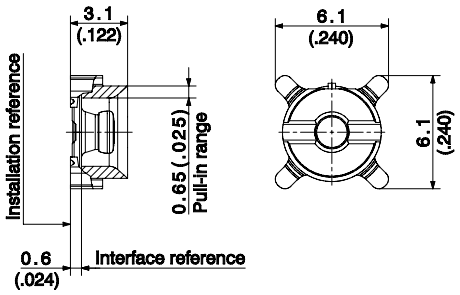

Fig. 1

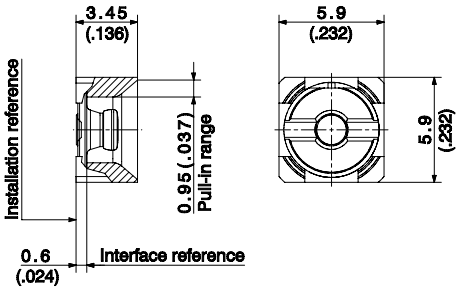

Fig. 2

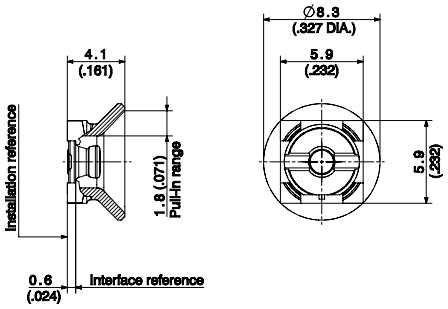

Fig. 3

HUBER+SUHNER type	Item no.	Packaging	Soldering pad	Notes	Fig.
82_MMBX-S50-0-1/111_NM	**23001783**	tape and reel	ML 122	pull-in range 0.65 mm / *.0256 in.*	1
82_MMBX-S50-0-1/111_NH	**23001784**	bulk 100 pcs.	ML 122	pull-in range 0.65 mm / *.0256 in.*	1
82_MMBX-S50-0-1/111_NE	**23001785**	single	ML 122	pull-in range 0.65 mm / *.0256 in.*	1
82_MMBX-S50-0-3/111_NM	**23031931**	tape and reel	ML 122	pull-in range 0.95 mm / *.0374 in.*	2
82_MMBX-S50-0-3/111_NH	**23011273**	bulk 100 pcs.	ML 122	pull-in range 0.95 mm / *.0374 in.*	2
82_MMBX-S50-0-3/111_NE	**23015527**	single	ML 122	pull-in range 0.95 mm / *.0374 in.*	2
82_MMBX-S50-0-13/111_NM	**23041511**	tape and reel	ML 122	pull-in range 1.80 mm / *.0709 in.*	3
82_MMBX-S50-0-13/111_NH	**23036608**	bulk 100 pcs.	ML 122	pull-in range 1.80 mm / *.0709 in.*	3
82_MMBX-S50-0-13/111_NE	**84032435**	single	ML 122	pull-in range 1.80 mm / *.0709 in.*	3

Cable groups see page 28 | Assembly tools see page 385 | Mounting holes see page 412

Straight PCB jacks (female)

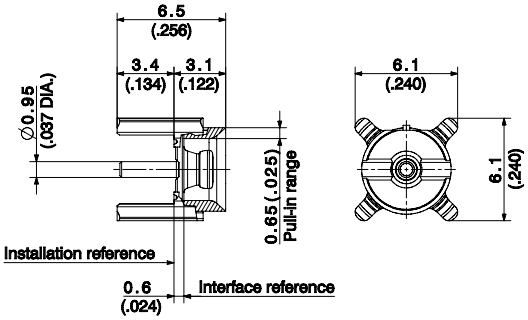

Fig. 1

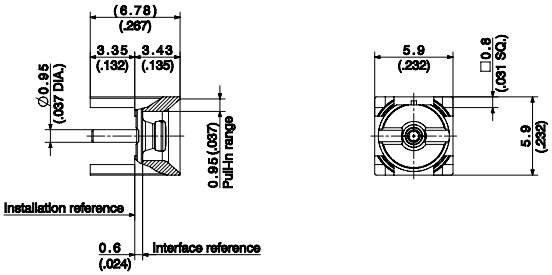

Fig. 2

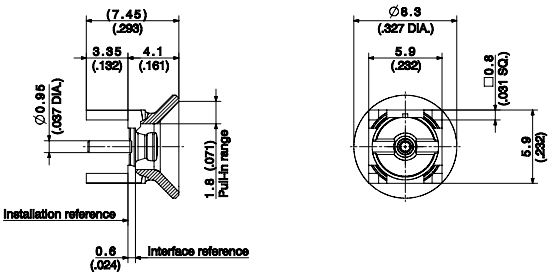

Fig. 3

HUBER+SUHNER type	Item no.	Packaging	Mounting hole	Notes	Fig.
82_MMBX-50-0-2/111_NM	**23001786**	tape and reel	ML 15	pull-in range 0.65 mm / .0256 *in.*	1
82_MMBX-50-0-2/111_NH	**23001787**	bulk 100 pcs.	ML 15	pull-in range 0.65 mm / .0256 *in.*	1
82_MMBX-50-0-2/111_NE	**23001788**	single	ML 15	pull-in range 0.65 mm / .0256 *in.*	1
82_MMBX-50-0-4/111_NH	**23013667**	bulk 100 pcs.	ML 15	pull-in range 0.95 mm / .0374 *in.*	2
82_MMBX-50-0-14/111_NH	**23038051**	bulk 100 pcs.	ML 15	pull-in range 1.80 mm / .0709 *in.*	3
82_MMBX-50-0-14/111_NE	**84032421**	single	ML 15	pull-in range 1.80 mm / .0709 *in.*	3

Straight PCB jacks (female), edge-mount

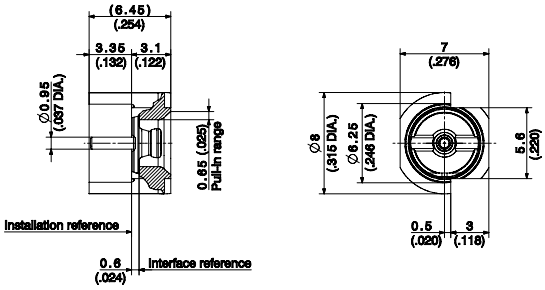

HUBER+SUHNER type	Item no.	Packaging	Mounting hole	Notes
92_MMBX-S50-0-12/111_NM	**23038620**	tape and reel	ML 147	
92_MMBX-S50-0-12/111_NE	**84019159**	single	ML 147	

Cable groups see page 28 | Assembly tools see page 385 | Mounting holes see page 412

ADAPTORS WITHIN-SERIES

Straight adaptors

> plug to plug (male)

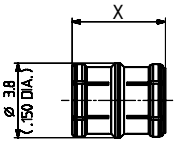

HUBER+SUHNER type	Item no.	Packaging	Board-to-board distance	Adaptor length X	Min. pull-in range
32_MMBX-50-0-1/111_NE	**23001749**	single	6.7 mm/.264 in.	4.7 mm/.158 in.	0.65 mm/.026 in.
32_MMBX-50-0-1/111_NY	**84028418**	industrial 200 pcs.	6.7 mm/.264 in.	4.7 mm/.158 in.	0.65 mm/.026 in.
32_MMBX-50-0-12/111_NH	**84004734**	industrial 100 pcs.	8.0 mm/.315 in.	6.0 mm/.236 in.	0.95 mm/.037 in.
32_MMBX-50-0-11/111_NE	**23040373**	single	9.0 mm/.354 in.	7.0 mm/.276 in.	0.95 mm/.037 in.
32_MMBX-50-0-4/111_NE	**23010564**	single	10.0 mm/.394 in.	8.0 mm/.315 in.	1.80 mm/.071 in.
32_MMBX-50-0-4/111_NY	**23038658**	industrial 300 pcs.	10.0 mm/.394 in.	8.0 mm/.315 in.	1.80 mm/.071 in.
32_MMBX-50-0-8/111_NE	**23030066**	single	11.65 mm/.459 in.	9.65 mm/.380 in.	1.80 mm/.071 in.
32_MMBX-50-0-13/111_NE	**84031096**	single	12.0 mm/.472 in.	10.0 mm/.417 in.	1.80 mm/.071 in.
32_MMBX-50-0-5/111_NE	**84026915**	single	14.0 mm/.551 in.	12.0 mm/.472 in.	1.80 mm/.071 in.
32_MMBX-50-0-5/111_NY	**23011920**	industrial 200 pcs.	14.0 mm/.551 in.	12.0 mm/.472 in.	1.80 mm/.071 in.
32_MMBX-50-0-10/111_NY	**23034946**	industrial 200 pcs.	15.0 mm/.591 in.	13.0 mm/.512 in.	1.80 mm/.071 in.
32_MMBX-50-0-6/111_NE	**23022532**	single	16.5 mm/.650 in.	14.5 mm/.571 in.	external guideance needed
32_MMBX-50-0-6/111_NH	**84024341**	industrial 100 pcs.	16.5 mm/.650 in.	14.5 mm/.571 in.	external guideance needed
32_MMBX-50-0-9/111_NH	**23033418**	industrial 100 pcs.	18.0 mm/.709 in.	16.0 mm/.630 in.	external guideance needed
32_MMBX-50-0-3/111_NE	**23023073**	single	20.0 mm/.787 in.	18.0 mm/.709 in.	external guideance needed
32_MMBX-50-0-15/111_NY	**84033819**	industrial 100 pcs.	21.2 mm/.835 in.	19.2 mm/.755 in.	external guideance needed
32_MMBX-50-0-14/111_NY	**84010338**	industrial 100 pcs.	32.7 mm/1.287 in.	30.7 mm/1.207 in.	external guideance needed

Cable groups see page 28 | Assembly tools see page 385 | Mounting holes see page 412

Bulkhead adaptors

> plug to plug (male)

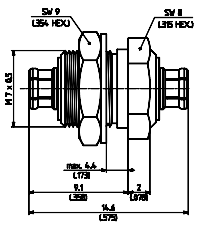

HUBER+SUHNER type	Item no.	Packaging	Interface	Notes
35_MMBX-50-0-1/111_NE	**23007587**	single	slide-slide	
35_MMBX-50-0-1/111_NH	**84015150**	bulk 100 pcs.	slide-slide	

> plug to plug (male)

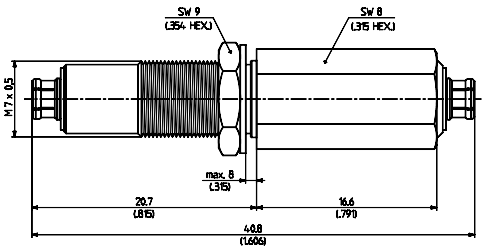

Fig. 1

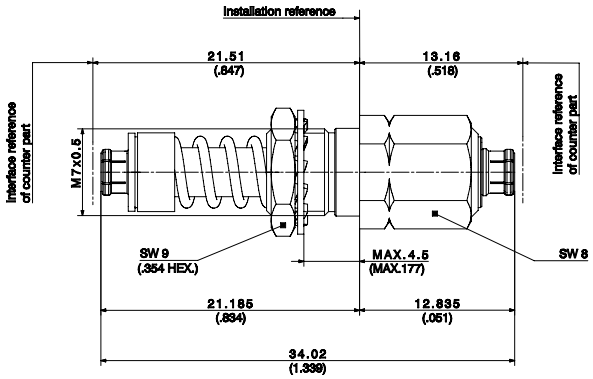

Fig. 2

HUBER+SUHNER type	Item no.	Packaging	Interface	Notes	Fig.
35_MMBX-50-0-5/111_NY	**23028242**	industrial 75 pcs.	slide-slide		1
35_MMBX-U50-0-9/113_NY	**84023360**	industrial 50 pcs.	slide-slide	extended axial float	2

Cable groups see page 28 | Assembly tools see page 385 | Mounting holes see page 412

TOOLS

Adaptor assembly and disassembly tool

Fig. 1

Fig. 2

HUBER+SUHNER type	Item no.	Packaging	Operating instruction	Fig.
74_Z-0-0-437	**23023494**	single	27378	1
74_Z-0-0-557	**84032418**	single	0000246815	2

Cable groups see page 28 | Assembly tools see page 385 | Mounting holes see page 412

SERIES MMCX
MICRO MINIATURE CONNECTORS

DESCRIPTION

HUBER+SUHNER® MMCX connectors are intended for use in applications where the smallest dimensions have to be achieved. These connectors can be used in applications from DC to 6 GHz.
The reliable "snap-on" coupling mechanism ensures that the electrical parameters are consistently reproduced.
Due to its non-slotted outer contact, the MMCX series provides a low RF-leakage.
In addition, HUBER+SUHNER SMT MMCX connectors fully meet today's SMT (Surface Mount Technology) requirements with superior design, material selection and packaging.
The HUBER+SUHNER SMT connectors are suitable to all reflow-soldered SMT -PCBs where impedance matching or screened signal transmission is necessary

CONTENTS PAGE

INTERFACE DIMENSIONS

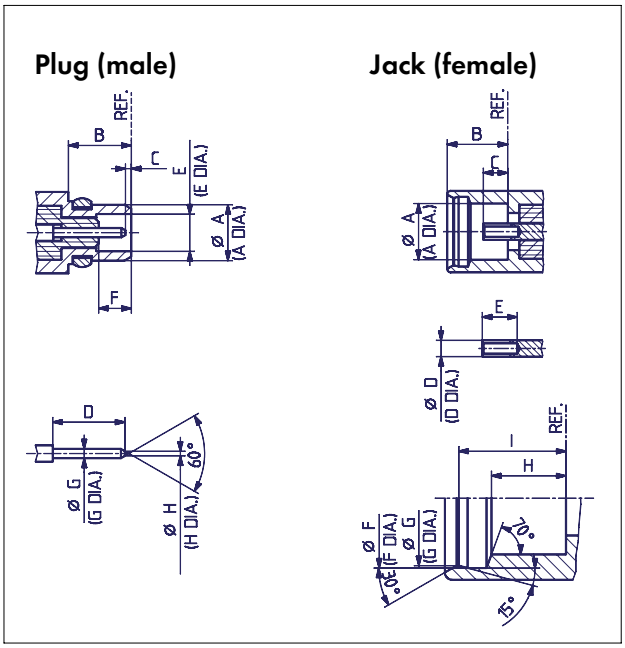

INTERFACE DIMENSIONS (MM / *INCHES*)

	Plug		Jack	
	min.	max.	min.	max.
A	–	2.40/.094	2.41/.095	–
B	2.70/.106	–	–	2.65/.104
C	0.00/.000	0.25/.010	0.90/.035	1.20/.047
D	1.23/.048	–	0.70/.028 nom.	
E	1.58/.062	1.62/.064	1.40/.055	–
F	1.23/.048	–	3.00/.118	3.04/.120
G*	0.38/.015	0.42/.017	2.88/.113	2.92/.115
H	–	0.20/.008	1.57/.062	1.63/.064

*	Jack		
G	2.88/.113	2.90/.114	2.92/.115
I	2.34/.092	2.30/.091	2.26/.089

Note: I is related to G

IP rating (interface, mated) IP50

TECHNICAL DATA

ELECTRICAL DATA	CECC 22000	TEST REQUIREMENTS
Impedance		50 Ω
Frequency range		DC ... 6 GHz
Dielectric withstanding voltage (at sea level)	4.4.5	500 V rms, 50 Hz
Working voltage (at sea level)		≤ 170 V rms, 50 Hz
Insulation resistance	4.4.4	≥ 10^3 MΩ / ≥ 500 MΩ [1]
Contact resistance - centre contact - outer contact	 4.4.2 4.4.3	 ≤ 5.0 mΩ / ≤ 10 mΩ [1] ≤ 2.5 mΩ / ≤ 5 mΩ [1]
VSWR (mated pair) - up to 4 GHz - 4 up to 6 GHz	4.4.1	(typical values) ≤ 1.15 ≤ 1.40 for cable connectors, see table below
RF leakage (measured at 1 GHz) - connectors for flexible cables - connectors for semi-rigid cables	4.4.8	 ≥ 60 dB ≥ 70 dB

1) valid for MMCX "Cube"-connectors only.

TYPICAL VSWR	FREQUENCY RANGE			
CONNECTOR TYPE	1 GHZ	2.5 GHZ	6 GHZ	CABLE GROUP
straight connectors	1.03	1.08	1.12	Y3, Y11
	1.04	1.08	1.12	U1
right angle connectors	1.03	1.08	1.13	Y3, Y11
	1.07	1.12	1.25	U1

Other connectors and cables on request

MECHANICAL DATA	CECC 22000	REQUIREMENTS
Engagement force	4.5.4	≤ 15 N / *3.4 lbs*
Disengagement force	4.5.4	6 N ... 15 N / *1.4 lbs ... 3.4 lbs*
Contact captivation	4.5.2	≥ 10 N / *2.3 lbs*
Cable retention force[2]	4.5.5	see pages 28 – 34
Durability (matings)	4.7.1	≥ 500

2) value considers maximum load of the cables without irreversible variations of specifications.

ENVIRONMENTAL DATA	CECC 22000 TEST CONDITIONS	EQUIVALENT MIL TEST CONDITIONS
Temperature range		*– 55° C ... + 155° C / – 67 °F ... + 311 °F*
Climatic category	4.6.5 → *55 / 155 / 21*	
Thermal shock	4.6.7 → IEC 68-2-14 Na	MIL-STD-202, Method 107 , Condition F
Moisture resistance	4.6.6 → IEC 68-2-3 Ca	MIL-STD-202, Method 106
Corrosion	4.6.10 → IEC 68-2-11 Ka	Saltspray test acc. to MIL-STD-202, Method 101, Condition B
Vibration	4.6.3 → IEC 68-2-6 Fc	MIL-STD-202, Method 204, Condition C

ENVIRONMENTAL DATA FOR "CUBE"-CONNECTORS ONLY	CECC 22000 TEST CONDITIONS	EQUIVALENT MIL TEST CONDITIONS
Temperature range		– 40°C ... + 90°C / – 40 °F ... + 194 °F
Climatic category	4.6.5 → 40 / 90 / 21	
Thermal shock	4.6.7	MIL-STD-202, Method 107, – 40°C/ 40 °F and + 90°C/ + 194 °F, 30 min. each
Moisture resistance	4.6.6	MIL-STD-202, Method 103, Condition B
Vibration	4.6.3	3 cycles in 3 opposite directions 10-150 Hz, 10-60 Hz: 0.75 mm/.030 in., 60-150 Hz: 10 G
Mechanical shock	4.6.4	MIL-STD-202, Method 213, Condition B

MATERIAL DATA		
CONNECTOR PARTS	MATERIAL	PLATING
Centre contact	copper-beryllium alloy, bronze	SUCOPRO / gold
Body	brass	SUCOPRO / gold
Crimp ferrules	brass	SUCOPRO / gold
Insulators	PTFE or PFA	

MATERIAL DATA FOR "CUBE"-CONNECTORS ONLY		
CONNECTOR PARTS	MATERIAL	PLATING
Leads Contact sockets	bronze	gold
Body	LCP (liquid crystal polymer), brass	gold
Outer contact	brass	gold
Insulators	LCP (liquid crystal polymer), PTFE or PFA	

PROCESSING DATA FOR "Cube"-CONNECTORS ONLY	TEST STANDARD	REQUIREMENT
Lead free reflow process	IPC/JEDECJ-STD-020C	recommended
Adherent to the print - shearing - pulling (vertical to PCB)		25 N/5.6 lbs 50 N/11.2 lbs

Some connectors may have a specification that differs from the above mentioned data.

The products are designed and guaranteed to pass the above mentioned test procedures. Any additional or different requirement arising from specific applications or environmental conditions which is not covered by these test procedures is subject to request.

CABLE CONNECTORS

Straight cable plugs (male)

> for semi-rigid cables

> cable entry soldered

> centre contact crimped

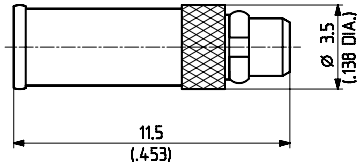

HUBER+SUHNER type	Item no.	Cable group (example)		Packaging	Assembly instruction	Crimp insert
11_MMCX-50-1-3/111_OE	**22648893**	Y2	(EZ 47)	single	9078	1
11_MMCX-50-2-1/111_OE	**22645297**	Y3, Y11	(EZ 86)	single	9170	1
11_MMCX-50-2-1/111_OH	**22649039**	Y3, Y11	(EZ 86)	bulk 100 pcs.	9170	1

> for flexible cables

> HUBER+SUHNER® full crimp

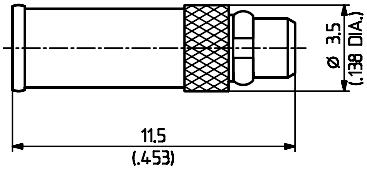

HUBER+SUHNER type	Item no.	Cable group (example)		Packaging	Assembly instruction	Crimp insert
11_MMCX-50-1-1/111_OE	**22645298**	U1	(EF 178)	single	9169	1 / 2.67
11_MMCX-50-1-1/111_OH	**22651666**	U1	(EF 178)	bulk 100 pcs.	9169	1 / 2.67
11_MMCX-50-1-2/111_OE	**22645296**	U0	(K 01152-07)	single	9169	1 / 2.67
11_MMCX-50-1-2/111_OH	**84027753**	U0	(K 01152-07)	bulk 100 pcs.	9169	1 / 2.67

> for flexible cables

> HUBER+SUHNER® full crimp

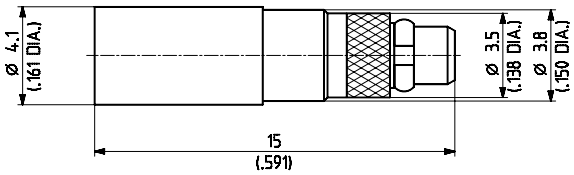

HUBER+SUHNER type	Item no.	Cable group (example)		Packaging	Assembly instruction	Crimp insert
11_MMCX-50-2-3/111_OE	**22649899**	U2	(EF 316)	single	9110	1 A
11_MMCX-50-2-3/111_OH	**23000258**	U2	(EF 316)	bulk 100 pcs.	9110	1 A
11_MMCX-50-2-4/111_OE	**22649901**	U4	(EF 316 D)	single	9110	1 A

Cable groups see page 28 Assembly tools see page 385 Mounting holes see page 412

Right angle cable plugs (male)

> for semi-rigid cables

> cable entry soldered

> centre contact soldered

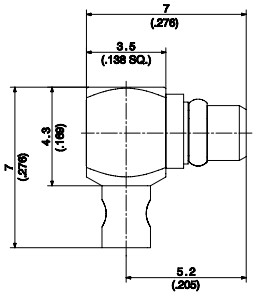

Fig. 1

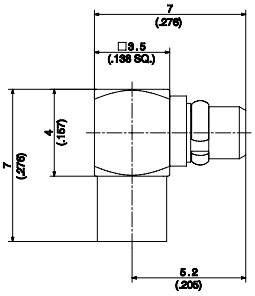

Fig. 2

HUBER+SUHNER type	Item no.	Cable group (example)		Packaging	Assembly instruction	Fig.
16_MMCX-50-1-12/111_OE	**84030531**	Y2	(EZ 47)	single	0000180777	1
16_MMCX-50-1-12/111_OH	**21000178**	Y2	(EZ 47)	bulk 100 pcs.	0000180777	1
16_MMCX-50-2-13/111_OE	**84032569**	Y3, Y11	(EZ 86)	single	0000214734	2
16_MMCX-50-2-13/111_OH	**84007944**	Y3, Y11	(EZ 86)	bulk 100 pcs.	0000214734	2

> for flexible cables

> cable entry crimp

> centre contact soldered

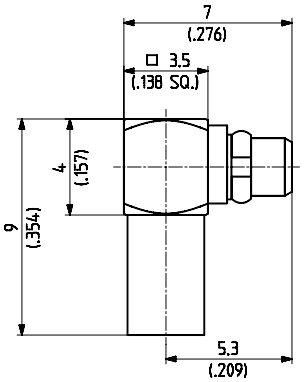

HUBER+SUHNER type	Item no.	Cable group (example)		Packaging	Assembly instruction	Crimp insert
16_MMCX-50-1-1/111_OE	**22645955**	U1	(EF 178)	single	9175	2.67
16_MMCX-50-1-1/111_OH	**22648762**	U1	(EF 178)	bulk 100 pcs.	9175	2.67

Cable groups see page 28 | Assembly tools see page 385 | Mounting holes see page 412

> for flexible cables

> cable entry crimp

> centre contact soldered

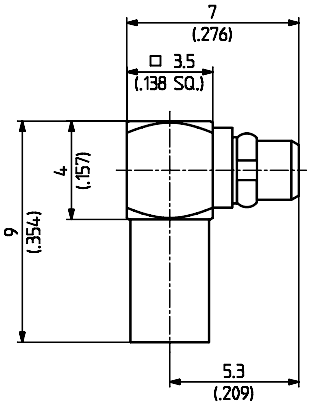

HUBER+SUHNER type	Item no.	Cable group (example)	Packaging	Assembly instruction	Crimp insert
16_MMCX-50-1-2/111_OE	**22645956**	U0 (K 01152-07)	single	9175	2.67
16_MMCX-50-1-2/111_OH	**22649009**	U0 (K 01152-07)	bulk 100 pcs.	9175	2.67

> for flexible cables

> cable entry crimp

> centre contact soldered

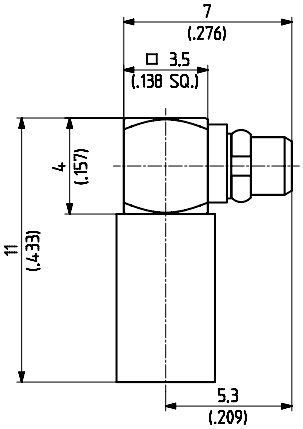

HUBER+SUHNER type	Item no.	Cable group (example)	Packaging	Assembly instruction	Crimp insert
16_MMCX-50-1-7/111_OE	**22649900**	Cable: K 01252 D	single	9128	A
16_MMCX-50-1-7/111_OH	**23008430**	Cable: K 01252 D	bulk 100 pcs.	9128	A
16_MMCX-50-2-2/111_OE	**22649374**	U4 (EF 316 D)	single	9128	A
16_MMCX-50-2-2/111_OH	**22651401**	U4 (EF 316 D)	bulk 100 pcs.	9128	A
16_MMCX-50-2-4/111_OE	**22649433**	U2 (EF 316)	single	9128	A
16_MMCX-50-2-4/111_OH	**22649635**	U2 (EF 316)	bulk 100 pcs.	9128	A

Straight cable jacks (female)

> for semi-rigid cables

> cable entry soldered

> centre contact crimped

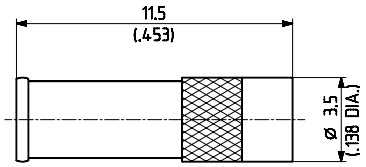

HUBER+SUHNER type	Item no.	Cable group (example)	Packaging	Assembly instruction	Crimp insert
21_MMCX-50-2-1/111_OE	**22645290**	Y3, Y11 (EZ 86)	single	9170	1

Cable groups see page 28 Assembly tools see page 385 Mounting holes see page 412

> for flexible cables

> HUBER+SUHNER® full crimp

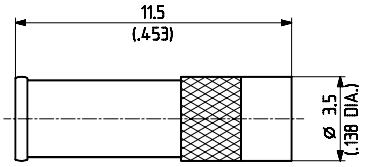

HUBER+SUHNER type	Item no.	Cable group (example)	Packaging	Assembly instruction	Crimp insert
21_MMCX-50-1-1/111_OE	**22645288**	U1 (EF 178)	single	9169	1 / 2.67
21_MMCX-50-1-2/111_OE	**22645289**	U0 (K 01152-07)	single	9169	1 / 2.67

Straight bulkhead cable jacks (female)

> for semi-rigid cables

> cable entry soldered

> centre contact crimped

> front mounting

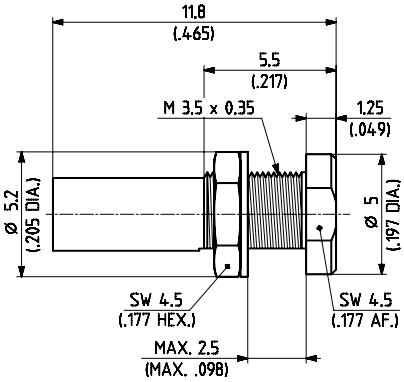

HUBER+SUHNER type	Item no.	Cable group (example)	Packaging	Assembly instruction/ Mounting hole	Crimp insert
24_MMCX-50-2-1/111_OE	**22645954**	Y3, Y11 (EZ 86)	single	9170 / ML 68	1

> for flexible cables

> HUBER+SUHNER® full crimp

> front mounting

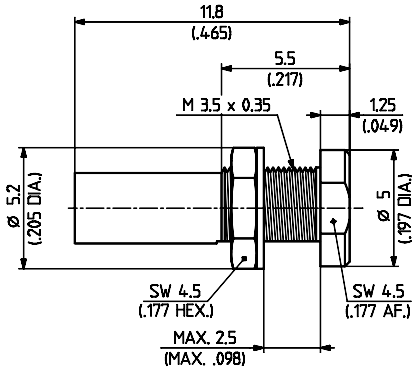

HUBER+SUHNER type	Item no.	Cable group (example)	Packaging	Assembly instruction/ Mounting hole	Crimp insert
24_MMCX-50-1-1/111_OE	**22645952**	U1 (EF 178)	single	9169 / ML 68	1 / 2.67
24_MMCX-50-1-1/111_OH	**23000416**	U1 (EF 178)	bulk 100 pcs.	9169 / ML 68	1 / 2.67

Cable groups see page 28 | Assembly tools see page 385 | Mounting holes see page 412

RECEPTACLES WITH SOLDER END

Receptacles, jacks (female)

> bulkhead mounted

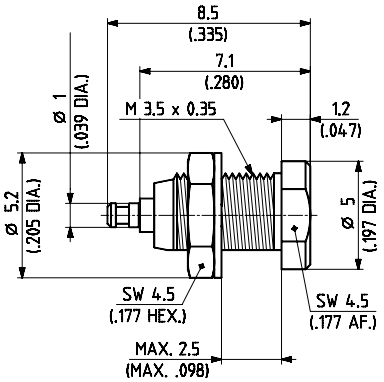

HUBER+SUHNER type	Item no.	Packaging	Mounting hole	Notes
22_MMCX-50-0-1/111_OE	**22645951**	single	ML 68	
22_MMCX-50-0-1/111_OH	**22660126**	bulk 100 pcs.	ML 68	

> bulkhead mounted

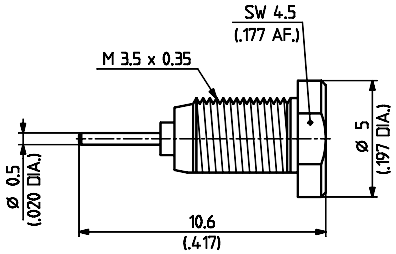

HUBER+SUHNER type	Item no.	Packaging	Mounting hole	Notes
22_MMCX-50-0-4/111_OH	**22660282**	bulk 100 pcs.	M 3.5 × 0.35	

PCB CONNECTORS

Straight PCB plugs (male)

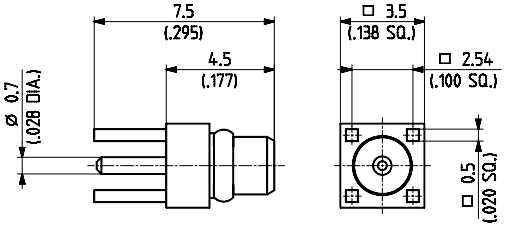

HUBER+SUHNER type	Item no.	Packaging	Mounting hole	Notes
81_MMCX-50-0-1/111_OE	**22646298**	single	ML 44	without stand-off

Cable groups see page 28 | Assembly tools see page 385 | Mounting holes see page 412

Straight PCB jacks (female)

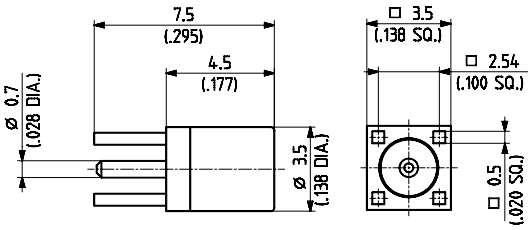

HUBER+SUHNER type	Item no.	Packaging	Mounting hole	Notes
82_MMCX-50-0-1/111_NE	**22645958**	single	ML 44	without stand-off
82_MMCX-50-0-1/111_NH	**22648469**	bulk 100 pcs.	ML 44	without stand-off

Jacks for horizontal applications

> edge mount

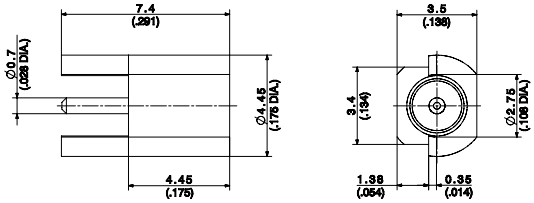

HUBER+SUHNER type	Item no.	Packaging	PCB Layout	Notes
82_MMCX-S50-0-2/111_KE	**22648789**	single	see application notes on page 66	
82_MMCX-S50-0-2/111_KH	**22649680**	bulk 100 pcs.	see application notes on page 66	
82_MMCX-S50-0-2/111_KG	**22649679**	tape and reel	see application notes on page 66	blister tape containing 750 pcs.
82_MMCX-S50-0-2/111_KL-1	**23041776**	tape and reel	see application notes on page 66	blister tape containing 1500 pcs.

Straight PCB jacks (female)

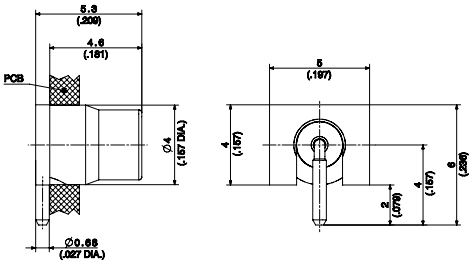

Fig. 1

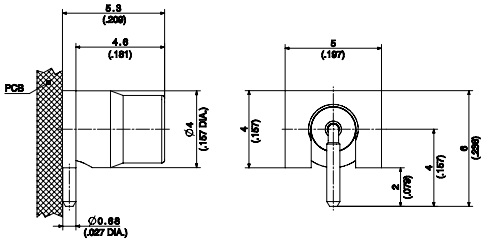

Fig. 2

HUBER+SUHNER type	Item no.	Packaging	Mounting hole	Notes	Fig.
82_MMCX-50-0-8/111_OE	**22652153**	single	ML 167	throughhole mount	1
82_MMCX-50-0-8/111_OM	**22660270**	tape and reel	ML 167	throughhole mount	1
82_MMCX-50-0-18/111_OM	**23023564**	tape and reel	ML 130	surface mount technology	2

Cable groups see page 28 Assembly tools see page 385 Mounting holes see page 412

Right angle PCB plugs (male)

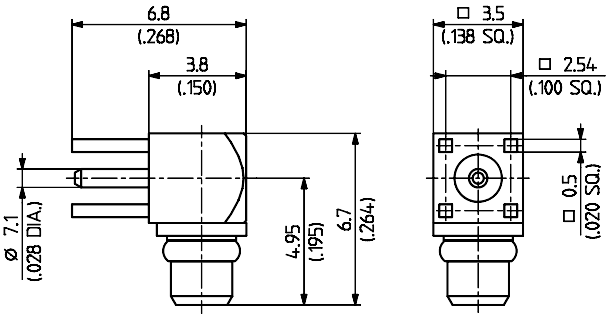

HUBER+SUHNER type	Item no.	Packaging	Mounting hole	Notes
84_MMCX-50-0-1/111_OH	**22658819**	bulk 100 pcs.	ML 44	without stand-off

Right angle PCB jacks (female)

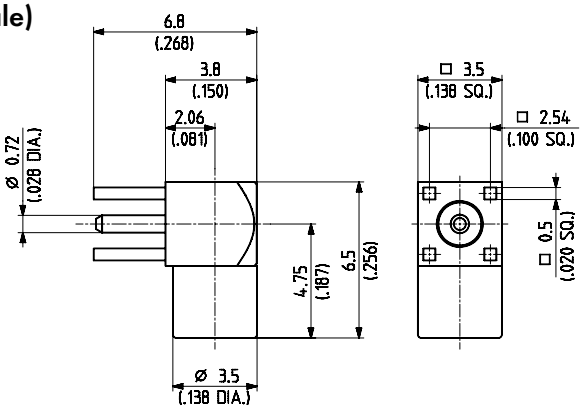

HUBER+SUHNER type	Item no.	Packaging	Mounting hole	Notes
85_MMCX-50-0-1/111_OE	**22645968**	single	ML 44	without stand-off
85_MMCX-50-0-1/111_OH	**22646636**	bulk 100 pcs.	ML 44	without stand-off

Cable groups see page 28 Assembly tools see page 385 Mounting holes see page 412

MMCX "CUBE"-CONNECTORS

Jack for straight (vertical) applications

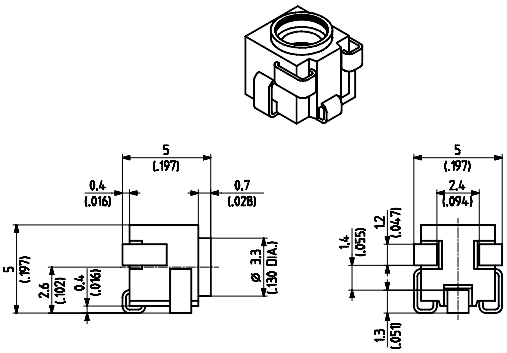

HUBER+SUHNER type	Item no.	Packaging	PCB Layout	Notes
82_MMCX-S50-0-55/119_OM	**84021645**	tape and reel	see application notes on page 63	blister tape containing 1500 pcs.

Jack for right angle (horizontal) applications

HUBER+SUHNER type	Item no.	Packaging	PCB Layout	Notes
85_MMCX-S50-0-55/119_OM	**84021646**	tape and reel	see application notes on page 63	blister tape containing 1500 pcs.

Combination jack

for straight (vertical) or right angle (horizontal) applications

HUBER+SUHNER type	Item no.	Packaging	PCB Layout	Notes
90_MMCX-S50-0-55/119_OE	**84021577**	single	see application notes on page 63	
90_MMCX-S50-0-55/119_OH	**84021269**	bulk 100 pcs.	see application notes on page 63	

Cable groups see page 28 | Assembly tools see page 385 | Mounting holes see page 412

PACKAGING FOR MMCX "Cube"-CONNECTORS

Blister tape supply in accordance with IEC 286-3/EIA-481

For automated placement the connectors can be supplied on industry standard tape-and-reel. Depending on the application, they are packaged uniformly either for vertical or horizontal mounting.

Bulk supply in bags of one single or 100 pcs. (90_MMCX-S50-0-55)

This delivery form supports vertical or horizontal applications of the SMT MMCX connector.
It is suitable for manual or automated tube fed pick-and-place assembly.

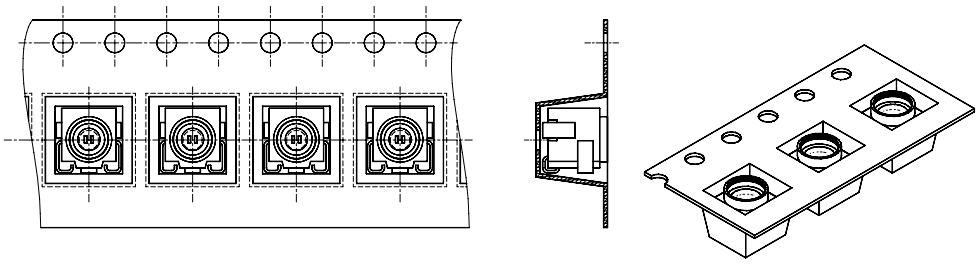

1. straight (vertical) application (82_MMCX-S50-0-55)

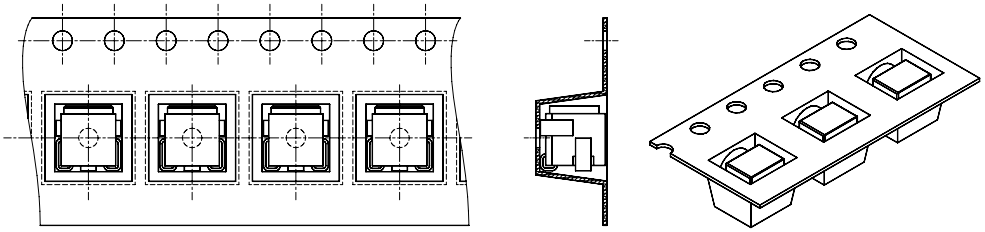

2. right angle (horizontal) application (85_MMCX-S50-0-55)

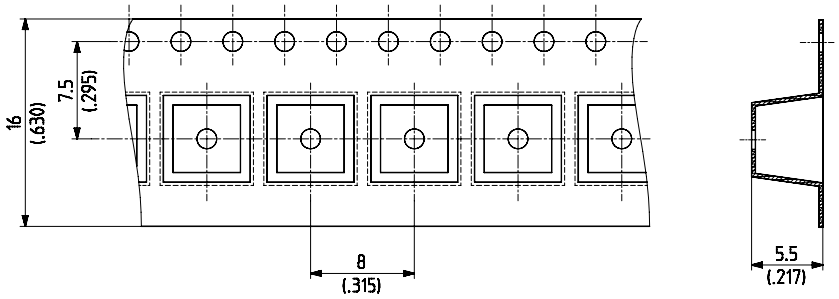

Dimensions of blister carrier tape

The 16 mm/*.63 inches* blister tape is delivered on reels of 330 mm/*13 inches* diameter and in tough cardboard boxes.

APPLICATION NOTES FOR MMCX "Cube"-CONNECTORS

Dimensions of mated pair and clearance for mating

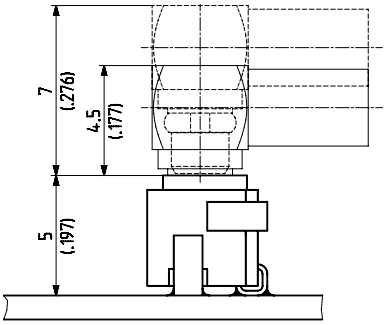

Vertical mounting together with a right angle cable connector (can be rotated by 360°)

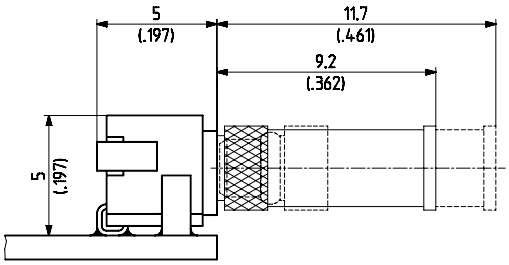

Horizontal mounting together with a straight cable connector

Appropriate operation

Surface-mounted electronic components exhibit a lower adherence force to the PCB than through-hole components.
The solder joints act as a mechanical fixation to the board and also function as the electrical contact.
Therefore the following has to be considered:

- Avoid forces from the cable of the mating connector to the surface mount connector.
  Fix the cable sufficiently and in several places.
- Apply only axial forces during the mating and de-mating of the connector parts.

Non-axial forces – such as improper pulling at the cable entry or the cable portion of right angle mating connector – may cause excessive torque forces, which could result in damage to the solder joints.

Recommendation:
Application of the assembly tools 74_Z-0-0-225 or 74_Z-0-0-272 when disengaging right angle connectors. The tool 74_Z-0-0-272 can simultaneously be used as a mating support for straight connectors.

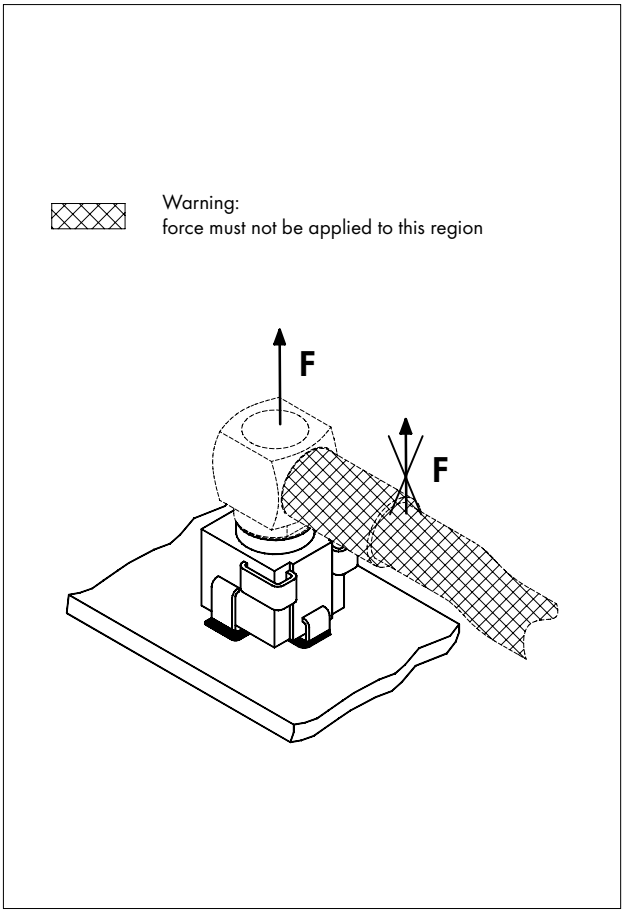

Recommended mounting pattern for MMCX "Cube"-connectors

MATERIAL FR 4 (ε_r = 4.6)

pattern

land (free of solder mask)

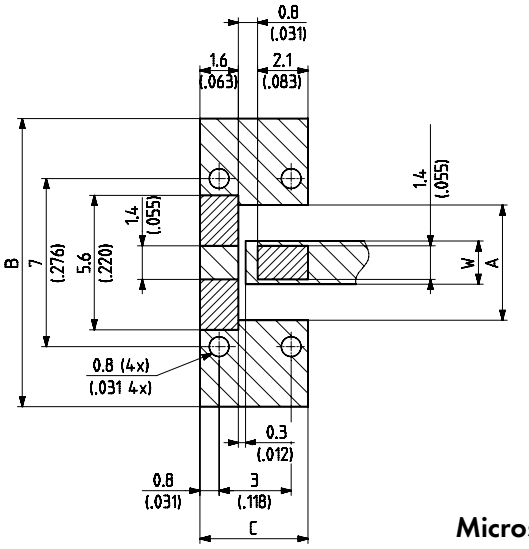

Microstrip line

PCB thickness	W	A	B	C
1.0 mm / .039 *in.*	1.8 mm / .071 *in.*	2.4 mm / .094 *in.*	12 mm / .472 *in.*	4.5 mm / .177 *in.*
1.6 mm / .063 *in.*	2.8 mm / .110 *in.*	4.8 mm / .189 *in.*	16 mm / .630 *in.*	5.0 mm / .197 *in.*

MATERIAL FR 4 (ε_r = 4.6)

pattern

land (free of solder mask)

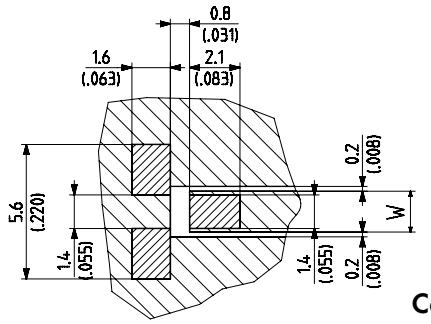

Coplanar line

PCB thickness	W
0.8 mm / .031 *in.*	1.85 mm / .037 *in.*
1.0 mm / .039 *in.*	1.70 mm / .067 *in.*
1.2 mm / .047 *in.*	1.60 mm / .063 *in.*
1.6 mm / .063 *in.*	1.50 mm / .059 *in.*

Data valid for PCB material FR 4 (εr = 4.6)

Automated pick-and-place for MMCX "Cube"-connectors

The MMCX "Cube" connectors can be processed on all state-of-the-art pick-and-place machines.

Application hints:

- Position of the connectors in the carrier tape

  For the uniform orientation of the connectors refer to the figures in section "Packaging" (see page 62).

- Connector pick up by suction tip

  1. Vertical mounting (82_MMCX-S50-0-55)
     You have the choice between the contact of the suction tip on the outer edge of the outer conductor sleeve (convenient circular or square standard tip) or the insertion of a special tip into the connector interface.

     When using an insertion tip consider that the outer conductor sleeve is only centered along one axis. A chuck alignment is possible only along this axis, which however is fully sufficient.

  2. Horizontal mounting (85_MMCX-S50-0-55)
     The suction tip meets an even surface and can be a suitable standard one:

- Vision system alignment inspection
  The optical alignment inspection of the MMCX "cube" connector is supported by its asymmetrical contour in vertical as well as horizontal applications.
- Placement

  For placing the connectors, the special arrangement of the leads must be considered. When applying a suction tip, the eccentricity of the outer conductor sleeve has to be taken into account.

Soldering

MMCX "Cube" connectors are compatible with reflow soldering methods.
Infrared soldering (IR, IC - max. 260°C/500 °F, 10s) is recommended.
Lead free solder pastes (96.5% tin, 3.5% silver) can be used with a thickness of 0.20 mm/*.008 inches* to 0.25 mm/ *.010 inches* if stencilled or screened in accordance with our recommended mounting pattern. The stand-off of 0.4 mm/*.016 inches* enables an easy visual inspection of the soldered joint.

Cleaning

The stand-off also allows effective cleaning after soldering, if necessary. It is especially advantageous when applying aqueous solutions.
Because of the material used, MMCX "cube" connectors withstand solvents such as alcohols, halogenated hydrocarbons and azeotropic solutions, as well as water mixed with alkaline saponifiers.

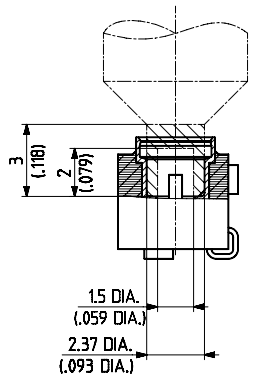

Recommendation for an insertion tip

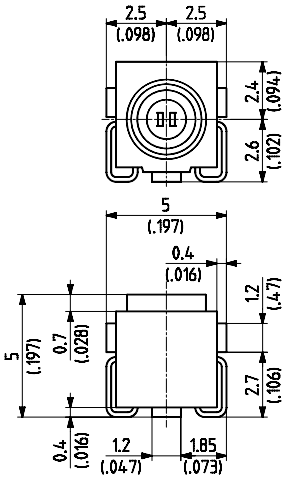

PACKAGING FOR MMCX EDGE MOUNT CONNECTORS

Blister tape supply in accordance with IEC 286-2/EIA-481

For automated placement the connectors can be supplied on industry standard type-and-reel.

Bulk supply in bags of 100 pcs.

This delivery form is suitable for manual or automated tube fed pick-and-place assembly.

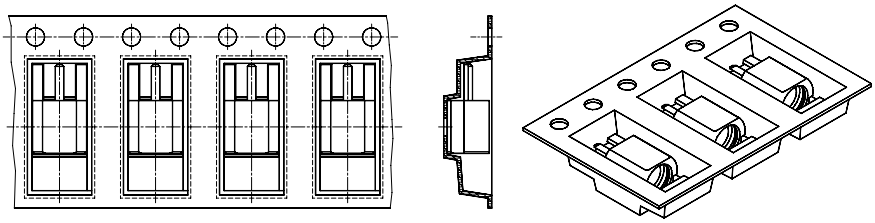

straight (horizontal) application

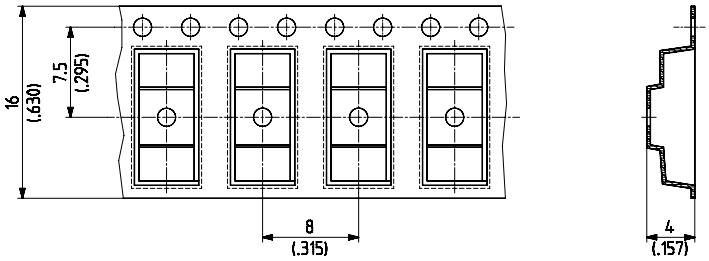

dimensions of blister carrier tape

The 16 mm/*.63 inches* blister tape is delivered on reels of 330 mm/*13 inches* diameter, in a tough cardboard box.

APPLICATION NOTES FOR MMCX EDGE MOUNT

Dimensions of mated pair and clearance for mating

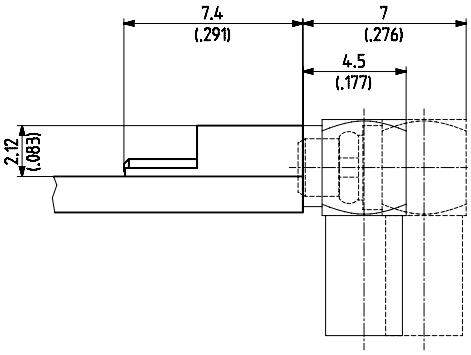

Horizontal mounting together with a right angle cable connector

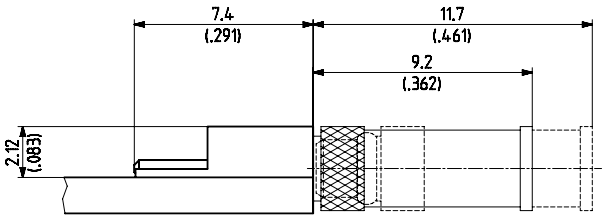

Horizontal mounting together with a straight cable connector

Appropriate operation for MMCX edge mount

For appropriate operation the following has to be considered:

- Avoid forces from the cable of the mating connector to the surface mount connector.
  Fix the cable sufficiently and in several places.
- Apply only axial forces during the mating and demating of the connector parts.

Non-axial forces – such as improper pulling at the cable entry or the cable portion of a right angle mating connector – may cause excessive torque forces, which could result in damage to the solder joints.

For further information about soldering or cleaning, please see page 65.

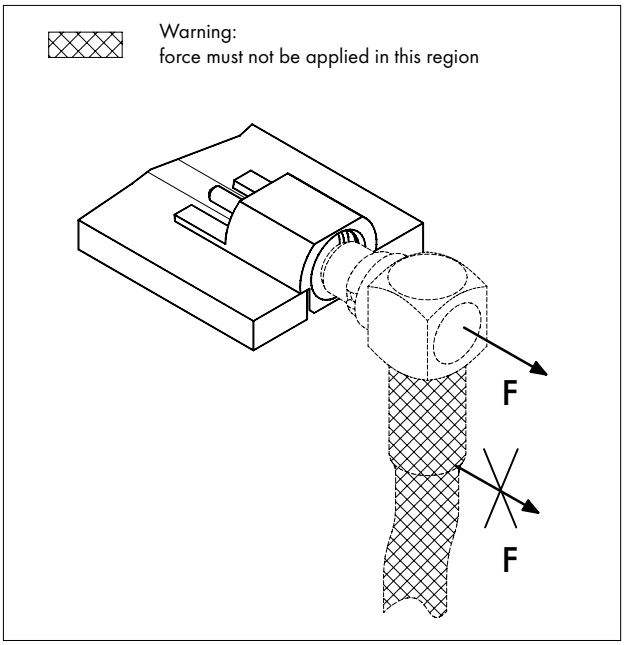

Recommended mounting pattern for MMCX edge mount

Material FR 4 (ε_r = 4.6)

pattern

land (free of solder mask)

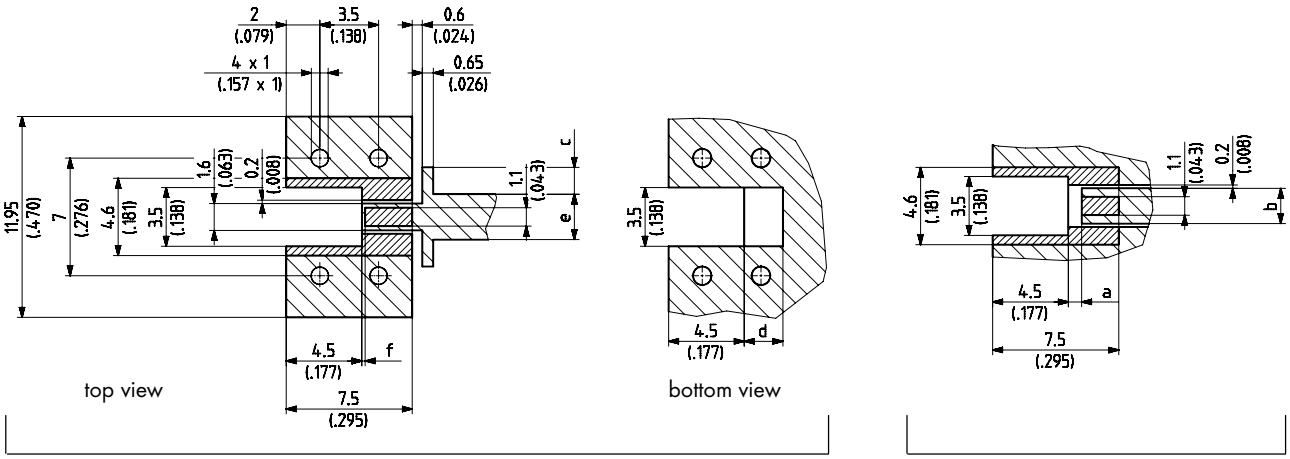

	Microstrip line				Coplanar line	
PCB thickness	**a**	**b**	**c**	**d**	**e**	**f**
0.8 mm / .031 *in.*	1.6 / .063	1.90 / .075		1.1 / .043	1.4 / .055	1.0 / .039
1.0 mm / .039 *in.*	1.4 / .055	1.75 / .069	0.3 / .012	1.2 / .047	1.8 / .071	0.9 / .035
1.6 mm / .063 *in.*	0.8 / .031	1.55 / .061	1.6 / .063	2.3 / .091	2.8 / .110	0.4 / .016

A FURTHER HUBER+SUHNER PRODUCT!

RF Power Switch - the fast, secure plug and play solution.

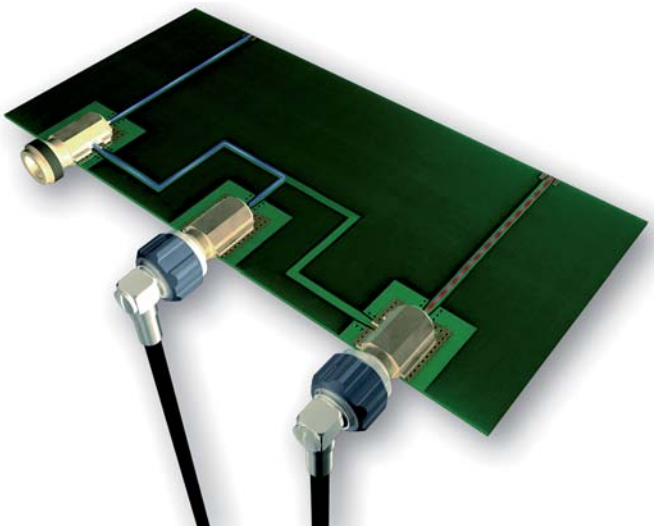

Details on the RF POWER SWITCH are to be found in the brochure Item no. 84020735. Get your copy free of charge at **www.hubersuhner.com.**

SERIES MMPX
PRECISION MICRO MINIATURE SNAP CONNECTORS

DESCRIPTION

The series MMPX offers smallest dimensions and unique electrical performance up to 65 GHz - including PCB links. The interface is based on MMCX dimensions. An established snap mechanism guarantees quick and reliable matings. The electrical bandwith from DC to 65 GHz makes MMPX very interesting for a wide range of applications. Especially for EMC critical systems MMPX provides an excellent RF leakage due to the non slotted outer contact.

IP rating (interface, mated) IP50

CONTENTS PAGE

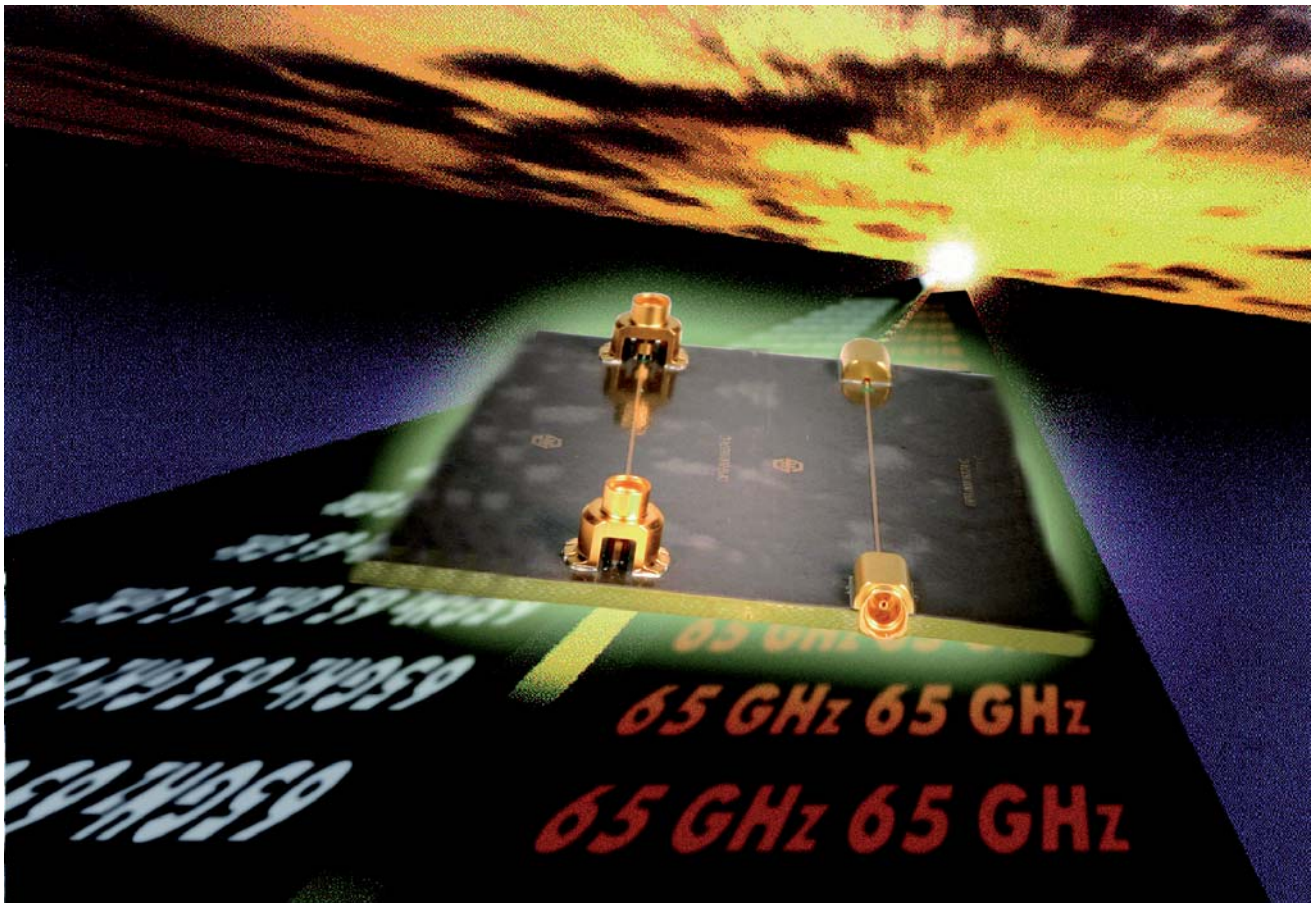

TECHNICAL DATA

ELECTRICAL DATA	REQUIREMENTS		
Impedance	50 Ω		
Frequency range (for interface only)	DC ... 65 GHz		
Dielectric withstanding voltage (at sea level)	500 V rms, 50 Hz		
Working voltage (at sea level)	≤ 170 V rms, 50 Hz		
Insulation resistance	≥ 1 GΩ		
Contact resistance - centre contact - outer contact	 ≤ 5 mΩ ≤ 2 mΩ		
Return loss, typical	see table below		
RF leakage typical (MMPX interface only)	DC – 25 GHz 85 dB	25 – 50 GHz 65 dB	50 – 65 GHz 60 dB

RETURN LOSS	FREQUENCY RANGE		
CONNECTOR TYPE	**DC — 26.5 GHZ**	**26.5 — 50 GHZ**	**50 — 65 GHZ**
straight cable plug (male)[1]	25 dB	17.5 dB	17.5 dB
Right angle cable plug (male)[1]	25 dB	20 dB	20 dB
Straight cable plug (male), precision interface (air dielectric only)[1]	25 dB	25 dB	25 dB
Straight PCB jack (female), SMT-version mated with a right angle cable plug	25 dB	15 dB	10 dB [2]
Edge mount PCB jack (female), SMT-version mated with a straight cable plug	22 dB	20 dB	20 dB

MECHANICAL DATA	REQUIREMENTS
Engagement force	max. 30 N / 6.7 lbs (typical 20 N / *4.4 lbs.*)
Disengagement force[3]	max. 30 N / 6.7 lbs (typical 15 N / *3.3 lbs.*)
Centre contact retention force PCB connectors	connector ≥ 2 N / *0.4 lbs.* assembly ≥ *7* N / *1.5 lbs.*
Durability (matings)	100

PROCESSING DATA PCB CONNECTORS	REQUIREMENTS	
Adherent to the print - shearing[2] - pulling (vertical to PCB)[2]	straight PCB jack 90 N / *20.2 lbs.* 50 N / *11.2 lbs.*[1]	edge mount PCB jack 70 N / *15.7 lbs.* no standard value available

1) mated with straight cable jack (female)
2) valid for recommended PCB structure only
3) decoupling tool MMPX shall be used (74_Z-0-0-555)!

ENVIRONMENTAL DATA	REQUIREMENTS
Temperature range	– 65° C ... + 155° C / – 85 °F ... + 311 °F
Thermal shock	assembly – 55° C .... + 85 °C / – 67 °F ... + 185 °F connector – 65° C .... + 155 °C / – 85 °F ... + 311 °F
Mechanical shock	100 g / 6 ms – max. interruption < 1 µs
Corrosion	Saltspray test
Vibration	20 g – max. interruption < 1 µs

MATERIAL DATA		
CONNECTOR PARTS	MATERIAL	PLATING
Centre contact	beryllium-copper alloy	gold over nickel
Body	brass	SUCOPRO / gold
Outer contact - female - male	copper-beryllium alloy brass	SUCOPRO/gold
Snap ring, male interface	copper-beryllium alloy	SUCOPRO/gold
Insulators	PTFE	

MATERIAL DATA FOR PCB CONNECTORS		
CONNECTOR PARTS	MATERIAL	PLATING
Centre contacts	copper-beryllium alloy	SUCOPRO/gold
Outer contact	copper-beryllium alloy	SUCOPRO/gold
Body	brass	SUCOPRO/gold
Insulators	PTFE	

Some connectors may have a specification that differs from the above mentioned data.

The products are designed and guaranteed to pass the above mentioned test procedures. Any additional or different requirement arising from specific applications or environmental conditions which is not covered by these test procedures is subject to request.

CABLE CONNECTORS

Straight cable plugs (male)

> for semi-rigid cables

> cable entry soldered

> centre contact soldered

> decoupling tool 74_Z-0-0-555 (recommended)

> phase matched adaptors MMPX/PC1.85 and PC1.85/PC1.85 available on request

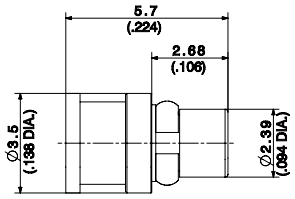

HUBER+SUHNER type	Item no.	Cable group (example)	Packaging	Assembly instruction	Notes
11_MMPX-50-2-1/111_NE	**84022225**	Y3 (EZ 86)	single	0000236402	precision interface, air dielectric only

> for semi-rigid, semi-flexible and flexible cables

> cable entry soldered

> centre contact plugged

> decoupling tool 74_Z-0-0-555 (recommended)

> phase matched adaptors MMPX/PC1.85 and PC1.85/PC1.85 available on request

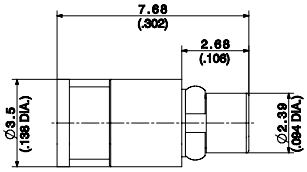

HUBER+SUHNER type	Item no.	Cable group (example)	Packaging	Assembly instruction	Notes
11_MMPX-50-2-2/111_NE	**84022228**	Y3, Y11 (EZ 86)	single	0000236450	

Right angle cable plugs (male)

> for semi-rigid, semi-flexible and flexible cables

> cable entry soldered

> centre contact plugged

> decoupling tool 74_Z-0-0-555 (recommended)

> phase matched adaptors MMPX/PC1.85 and PC1.85/PC1.85 available on request

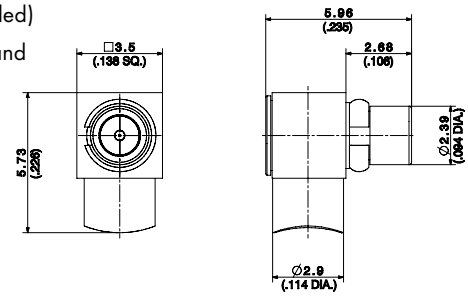

HUBER+SUHNER type	Item no.	Cable group (example)	Packaging	Assembly instruction	Notes
16_MMPX-50-2-1/111_NE	**84022227**	Y3, Y11 (EZ 86)	single	0000236453	

Cable groups see page 28 | Assembly tools see page 385 | Mounting holes see page 412

Straight cable jacks (female)

> for semi-rigid, semi-flexible and flexible cables

> cable entry soldered

> centre contact soldered

> decoupling tool 74_Z-0-0-555 (recommended)

> phase matched adaptors MMPX/PC1.85 and PC1.85/PC1.85 available on request

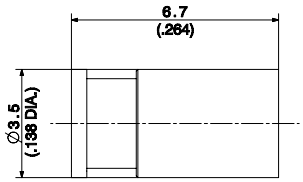

HUBER+SUHNER type	Item no.	Cable group (example)	Packaging	Assembly instruction	Notes
21_MMPX-50-2-1/111_NE	**84022226**	Y3, Y11 (EZ 86)	single	0000236433	

PCB CONNECTORS

Straight PCB jacks (female)

> surface mount type SMT

> decoupling tool 74_Z-0-0-555 (recommended)

> phase matched adaptors MMPX/PC1.85 and PC1.85/PC1.85 available on request

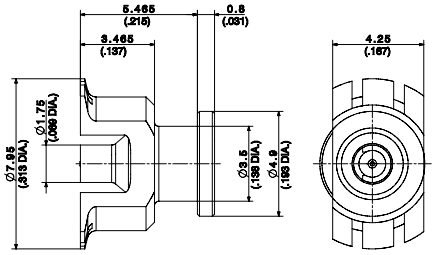

HUBER+SUHNER type	Item no.	Packaging	PCB Layout*	Notes
82_MMPX-S50-0-1/111_NM	**84009130**	Tape		Blister tape containing 10 pcs.
82_MMPX-S50-0-1/111_NM	**84009131**	tape and reel		Blister tape containing 750 pcs.

* PCB layouts on request. Please contact our affiliate or agent in your country.

Cable groups see page 28 Assembly tools see page 385 Mounting holes see page 412

Straight PCB jacks (female), edge-mount

> surface mount type SMT

> decoupling tool 74_Z-0-0-555 (recommended)

> phase matched adaptors MMPX/PC1.85 and PC1.85/PC1.85 available on request

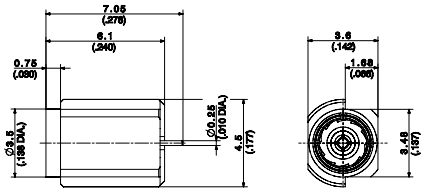

HUBER+SUHNER type	Item no.	Packaging	PCB Layout*	Notes
92_MMPX-S50-0-1/111_NM	**84009138**	Tape		Blister tape containing 10 pcs.
92_MMPX-S50-0-1/111_NM	**84009140**	tape and reel		Blister tape containing 500 pcs.

> surface mount type SMT

> extra shielded for EMF sensitive applications

> decoupling tool 74_Z-0-0-555 (recommended)

> phase matched adaptors MMPX/PC1.85 and PC1.85/PC1.85 available on request

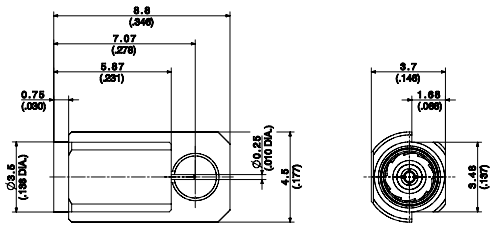

HUBER+SUHNER type	Item no.	Packaging	PCB Layout*	Notes
92_MMPX-S50-0-2/111_NE	**84016110**	single		

* PCB layouts on request. Please contact our affiliate or agent in your country.

Cable groups see page 28 | Assembly tools see page 385 | Mounting holes see page 412

SERIES MCX 50Ω
MICRO MINIATURE CONNECTORS

DESCRIPTION

HUBER+SUHNER MCX micro miniature snap-on connectors offer you an excellent blend of size, weight, durability and performance for applications such as mobile and fixed telecommunications, in GPS applications and in Test+Measurement systems for testing instruments and apparatus. They are designed for frequencies up to 6 GHz and are tested according to the international standard CECC 22220. And they meet all the high requirements that micro coaxial connectors are expected to satisfy today.

CONTENT PAGE

INTERFACE DIMENSIONS

Plug (male)

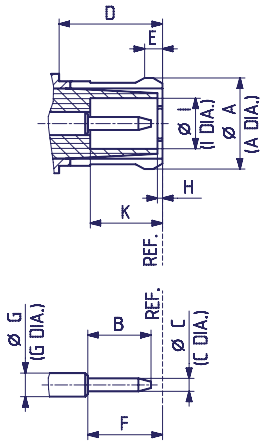

Jack (female)

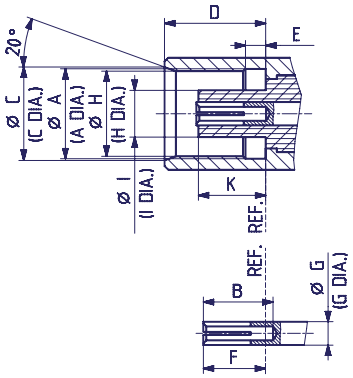

INTERFACE DIMENSIONS (MM / *INCHES*)

	Plug		Jack	
	min.	max.	min.	max.
A	3.72/.146*	3.80/.150*	3.60/.142	3.70/.146
B	2.49/.098	2.59/.102	2.80/.110	–
C	0.48/.019	0.53/.021	3.75/.148	3.85/.152
D	4.15/.163	–	4.00/.157	4.12/.162
E	0.70/.028	0.75/.030	0.75/.030	0.85/.033
F	2.80/.110	3.20/.126	2.30/.091	2.80/.110
G	0.95/.037 nom.		0.95/.037 nom.	
H	–	0.30/.012	3.42/.135	3.48/.137
I	2.00/.079	2.07/.081	1.80/.071	1.98/.078
K	2.80/.110	3.20/.126	2.60/.102	2.80/.110

* prior to slotting

Interface dimensions conformable to the Standards:

International: IEC 60169-36
Europe: CECC 22220

IP rating (interface, mated) IP50

TECHNICAL DATA

ELECTRICAL DATA	CECC 22000	TEST REQUIREMENTS
Impedance		50 Ω
Frequency range		DC ... 6 GHz
Dielectric withstanding voltage (at sea level)	4.4.5	≥ 750 V rms, 50 Hz (depending on cable)
Working voltage (at sea level) - unmated		≥ 170 V rms, 50 Hz (depending on cable)
Working voltage (at 21 000 m / *70 000 ft.*) - unmated		≥ 42 V rms, 50 Hz (depending on cable)
Insulation resistance	4.4.4	≥ 10^4 MΩ
Contact resistance - centre contact - outer contact	 4.4.2 4.4.3	 ≤ 5 mΩ ≤ 1 mΩ
RF leakage (measured at 1 GHz) - connectors for flexible cables - connectors for semi-rigid cables	4.4.8	 ≥ 60 dB ≥ 70 dB

MECHANICAL DATA	CECC 22000	REQUIREMENTS
Engagement force	4.5.1	≤ 25 N / *5.6 lbs*
Disengagement force	4.5.1	8 N ... 20 N / *1.8 lbs ... 4.5 lbs*
Contact captivation	4.5.2	≥ 10 N / 2.3 *lbs*
Cable retention force[1)]	4.5.5	see pages 28 – 34
Durability (matings)	4.7.1	≥ 500

1) Value considers maximum load of the cables without irreversible variations of specifications.

ENVIRONMENTAL DATA	CECC 22000	EQUIVALENT MIL TEST CONDITIONS
Temperature range		*– 55° C ... + 155° C / – 67 °F ... + 311 °F*
Climatic category		IEC → 55 / 155 / 21
Thermal shock	4.6.7	MIL-STD-202, Method 107, Condition F
High temperature endurance test	4.7.2	MIL-STD-202, Method 108A, Condition D
Moisture resistance	4.6.6	MIL-STD-202, Method 106
Corrosion	4.6.10	Saltspray test acc. to MIL-STD-202, Method 101, Condition B
Vibration	4.6.3	MIL-STD-202, Method 204, Condition D

MATERIAL DATA		
CONNECTOR PARTS	**MATERIAL**	**PLATING**
Pin contacts	brass	SUCOPRO / gold
Body	brass	SUCOPRO / SUCOPLATE® / gold
Socket contacts	copper-beryllium alloy	SUCOPRO/gold
Outer contacts - plug - jack	 copper-beryllium alloy brass	 SUCOPRO/gold / SUCOPLATE®
Crimp ferrules	copper / brass	SUCOPRO/gold
Insulators	PTFE or PFA	

Other materials and platings on request.

Some connectors may have a specification that differs from the above mentioned data.

The products are designed and guaranteed to pass the above mentioned test procedures. Any additional or different requirement arising from specific applications or environmental conditions which is not covered by these test procedures is subject to request.

CABLE CONNECTORS

Straight cable plugs (male)

> for semi-rigid cables, SUCOFORM and MULTIFLEX cables

> cable entry soldered

> centre contact soldered

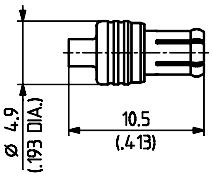

HUBER+SUHNER type	Item no.	Cable group (example)	Packaging	Assembly instruction
11_MCX-50-1-14/111_NE	**23032081**	Y2 (EZ 47)	single	27413
11_MCX-50-2-19/111_NH	**23032147**	Y3, Y11 (EZ 86)	bulk 100 pcs.	27496
11_MCX-50-3-1/111_NE	**23024699**	Y12 (Sucoform 141)	single	0000200108
11_MCX-50-3-1/111_NH	**84006763**	Y12 (Sucoform 141)	bulk 100 pcs.	0000200108

> for flexible cables

> HUBER+SUHNER® full crimp

> taper sleeves see page 406

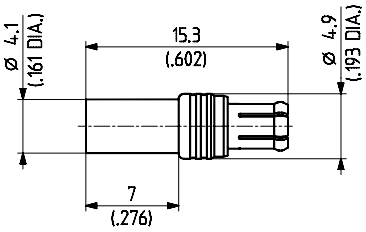

HUBER+SUHNER type	Item no.	Cable group (example)	Packaging	Assembly instruction	Crimp insert
11_MCX-50-1-13/133_NH	**22658307**	U1 (EF 178)	bulk 100 pcs.	27316	1 A
11_MCX-50-1-13/111_NH	**23002830**	U1 (EF 178)	bulk 100 pcs.	27316	1 A
11_MCX-50-2-15/111_NE	**84018641**	U4 (EF 316 D)	single	27306	1 A
11_MCX-50-2-15/111_NH	**23000440**	U4 (EF 316 D)	bulk 100 pcs.	27306	1 A
11_MCX-50-2-15/133_NH	**23000566**	U4 (EF 316 D)	bulk 100 pcs.	27306	1 A
11_MCX-50-2-16/111_NE	**84022831**	U2 (EF 316)	single	27306	1 A
11_MCX-50-2-16/111_NH	**22658275**	U2 (EF 316)	bulk 100 pcs.	27306	1 A
11_MCX-50-2-16/133_NH	**23000437**	U2 (EF 316)	bulk 100 pcs.	27306	1 A

Cable groups see page 28 | Assembly tools see page 385 | Mounting holes see page 412

Right angle cable plugs (male)

> for semi-rigid cables, SUCOFORM and MULTIFLEX cables

> cable entry soldered

> centre contact soldered

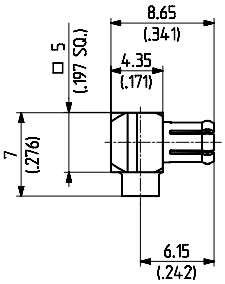

HUBER+SUHNER type	Item no.	Cable group (example)	Packaging	Assembly instruction
16_MCX-50-1-11/111_NE	**23024700**	Y2 (EZ 47)	single	27495
16_MCX-50-1-11/111_NH	**23032063**	Y2 (EZ 47)	bulk 100 pcs.	27495
16_MCX-50-2-104/111_NH	**23032067**	Y3, Y11 (EZ 86)	bulk 100 pcs.	27308
16_MCX-50-3-8/111_NH	**23012471**	Y5, Y12 (EZ 141)	bulk 100 pcs.	27401

> for flexible cables

> cable entry crimp

> centre contact soldered

> taper sleeves see page 406

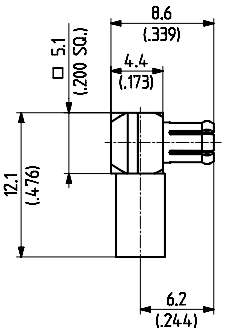

HUBER+SUHNER type	Item no.	Cable group (example)	Packaging	Assembly instruction	Crimp insert
16_MCX-50-1-7/111_NH	**23000443**	U1 (EF 178)	bulk 100 pcs.	27319	A
16_MCX-50-1-7/133_NH	**22658308**	U1 (EF 178)	bulk 100 pcs.	27319	A
16_MCX-50-2-11/133_NE	**22660003**	U4 (EF 316 D)	single	27102	A
16_MCX-50-2-11/133_NH	**22650803**	U4 (EF 316 D)	bulk 100 pcs.	27102	A
16_MCX-50-2-11/111_NH	**23015358**	U4 (EF 316 D)	bulk 100 pcs.	27102	A
16_MCX-50-2-14/133_NE	**22660002**	U2 (EF 316)	single	27102	A
16_MCX-50-2-14/133_NH	**22660001**	U2 (EF 316)	bulk 100 pcs.	27102	A
16_MCX-50-2-14/111_NH	**23000445**	U2 (EF 316)	bulk 100 pcs.	27102	A

Cable groups see page 28 | Assembly tools see page 385 | Mounting holes see page 412

> for flexible cables

> low profile

> cable entry soldered

> centre contact soldered

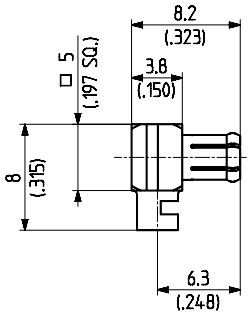

HUBER+SUHNER type	Item no.	Cable group (example)	Packaging	Assembly instruction
16_MCX-50-2-102/111_NH	**23000454**	U2 (EF 316)	bulk 100 pcs.	27307

Straight cable jacks (female)

> for flexible cables

> HUBER+SUHNER® full crimp

> taper sleeves see page 406

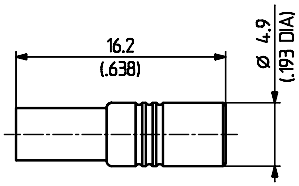

HUBER+SUHNER type	Item no.	Cable group (example)	Packaging	Assembly instruction	Crimp insert
21_MCX-50-1-11/111_NE	**84023972**	U1 (EF 178)	single	27317	1 A
21_MCX-50-1-11/111_NH	**23005297**	U1 (EF 178)	bulk 100 pcs.	27317	1 A
21_MCX-50-2-12/111_NE	**23032052**	U4 (EF 316 D)	single	27309	1 A
21_MCX-50-2-12/133_NH	**22658278**	U4 (EF 316 D)	bulk 100 pcs.	27309	1 A
21_MCX-50-2-13/111_NH	**23005298**	U2 (EF 316)	bulk 100 pcs.	27309	1 A
21_MCX-50-2-13/133_NH	**22658279**	U2 (EF 316)	bulk 100 pcs.	27309	1 A

Cable groups see page 28 | Assembly tools see page 385 | Mounting holes see page 412

Straight bulkhead cable jacks (female)

> for semi-rigid cables, SUCOFORM and MULTIFLEX cables

> cable entry soldered

> centre contact soldered

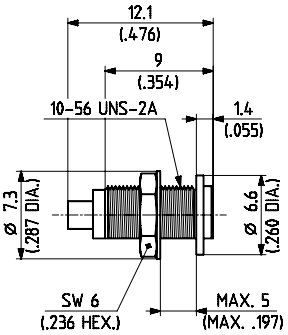

Fig. 1

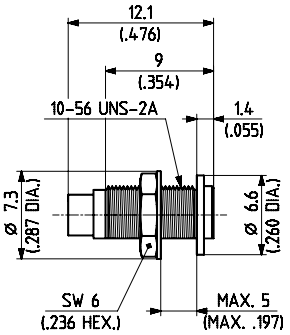

Fig. 2

HUBER+SUHNER type	Item no.	Cable group (example)		Packaging	Assembly instruction/ Mounting hole	Fig.
24_MCX-50-1-3/111_NE	**22641648**	Y2	(EZ 47)	single	3100 / ML 11	1
24_MCX-50-2-3/111_NE ⊞	**22543580**	Y3, Y11	(EZ 86)	single	3100 / ML 11	2

⊞ **centre contact NOT captivated**

> for flexible cables

> HUBER+SUHNER® full crimp

> taper sleeves see page 406

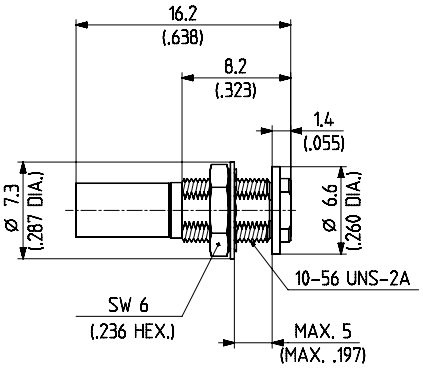

HUBER+SUHNER type	Item no.	Cable group (example)		Packaging	Assembly instruction/ Mounting hole	Crimp insert
24_MCX-50-1-13/111_NH	**23005299**	U1	(EF 178)	bulk 100 pcs.	27317 / ML 11	1 A
24_MCX-50-1-13/133_NH	**22658310**	U1	(EF 178)	bulk 100 pcs.	27317 / ML 11	1 A
24_MCX-50-2-6/111_NH	**23005300**	U4	(EF 316 D)	bulk 100 pcs.	27309 / ML 11	1 A
24_MCX-50-2-7/111_NH	**23000468**	U2	(EF 316)	bulk 100 pcs.	27309 / ML 11	1 A

Cable groups see page 28 | Assembly tools see page 385 | Mounting holes see page 412

RECEPTACLES WITH SOLDER END

Receptacles, jacks (female)

> bulkhead mounted

> front mounting

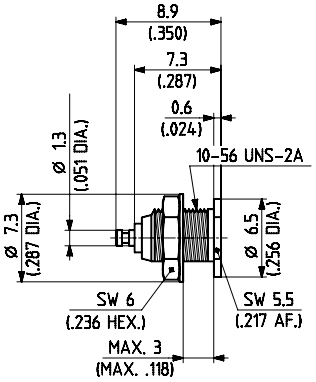

Fig. 1

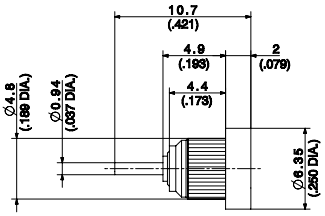

Fig. 2 (press-in)

HUBER+SUHNER type	Item no.	Packaging	Mounting hole	Fig.
22_MCX-50-0-2/111_NE	**22640171**	single	ML 11	1
22_MCX-50-0-2/111_NH	**22646960**	bulk 100 pcs.	ML 11	1
22_MCX-50-0-2/133_NE	**22643633**	single	ML 11	1
22_MCX-50-0-2/133_NH	**22644433**	bulk 100 pcs.	ML 11	1
22_MCX-50-0-19/111_NH	**22652984**	bulk 100 pcs.	ML 103	2
22_MCX-50-0-19/133_NH	**23019789**	bulk 100 pcs.	ML 103	2

PCB CONNECTORS

Straight PCB plugs (male)

> with stand-off

> 2.54 mm / *.100 in.* grid

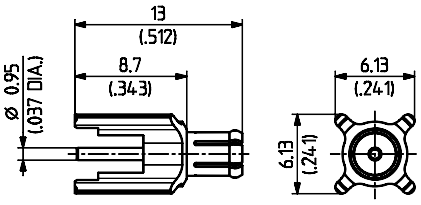

Fig. 1

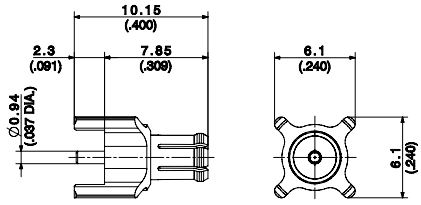

Fig. 2

HUBER+SUHNER type	Item no.	Packaging	Mounting hole	Fig.
81_MCX-50-0-6/111_NE	**84023713**	single	ML 15	1
81_MCX-50-0-6/111_NH	**23005296**	bulk 100 pcs.	ML 15	1
81_MCX-50-0-9/111_NH	**23026871**	bulk 100 pcs.	ML 15	2

Cable groups see page 28 Assembly tools see page 385 Mounting holes see page 412

Straight PCB jacks (female)

> 2.54 mm / .100 *in.* grid

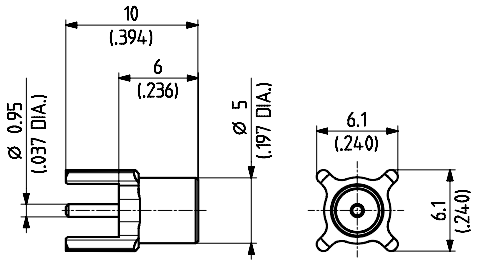

Fig. 1

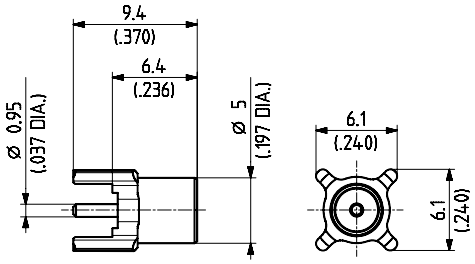

Fig. 2

HUBER+SUHNER type	Item no.	Packaging	Mounting hole	Notes	Fig.
82_MCX-50-0-17/111_NH	**23006209**	bulk 100 pcs.	ML 15	without stand-off	1
82_MCX-50-0-19/111_NE	**84018352**	single	ML 15	with stand-off	2
82_MCX-50-0-19/111_NH	**22658305**	bulk 100 pcs.	ML 15	with stand-off	2
82_MCX-50-0-19/111_NM	**23000573**	tape and reel	ML 15	with stand-off	2

> 1.27 mm / .05 *in.* grid

> space saving version

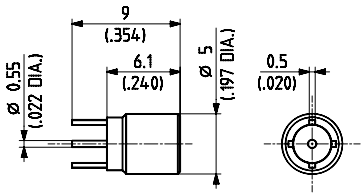

HUBER+SUHNER type	Item no.	Packaging	Mounting hole	Notes
82_MCX-50-0-10/111_NE	**22641649**	single	ML 44	without stand-off
82_MCX-50-0-10/111_NH	**22651980**	bulk 100 pcs.	ML 44	without stand-off

> surface mount type SMT

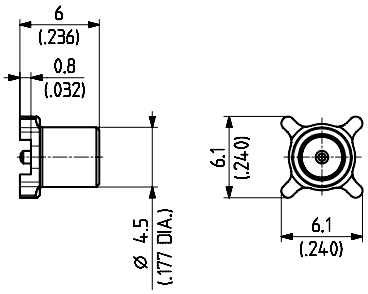

HUBER+SUHNER type	Item no.	Packaging	Mounting hole	Notes
82_MCX-50-0-29/111_NE	**84018482**	single	ML 120	
82_MCX-50-0-29/111_NH	**23001527**	bulk 100 pcs.	ML 120	
82_MCX-50-0-29/111_NM	**22658306**	tape and reel	ML 120	

Cable groups see page 28 Assembly tools see page 385 Mounting holes see page 412

> surface mount type SMT

> edge mount

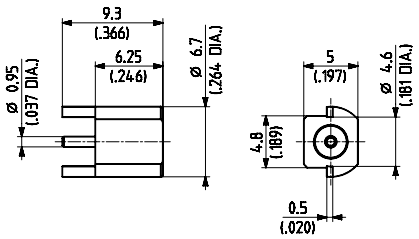

HUBER+SUHNER type	Item no.	Packaging	Mounting hole	Notes
82_MCX-S50-0-22/111_NE	**22651467**	single	ML 121	
82_MCX-S50-0-22/111_NM	**84011207**	tape and reel	ML 121	

Right angle PCB jacks (female)

> 2.54 mm / .100 *in.* grid

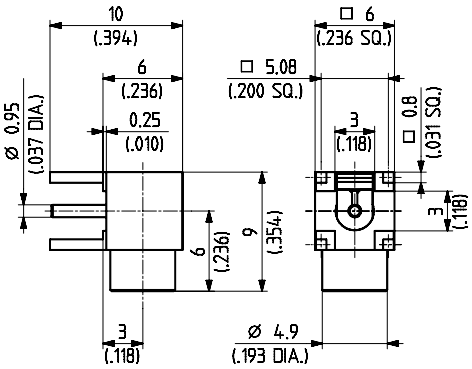

HUBER+SUHNER type	Item no.	Packaging	Mounting hole	Notes
85_MCX-50-0-16/111_NE	**84018523**	single	ML 15	
85_MCX-50-0-16/111_NH	**23001545**	bulk 100 pcs.	ML 15	
85_MCX-50-0-16/111_NM	**84030779**	tape and reel	ML 15	

> surface mount type SMT

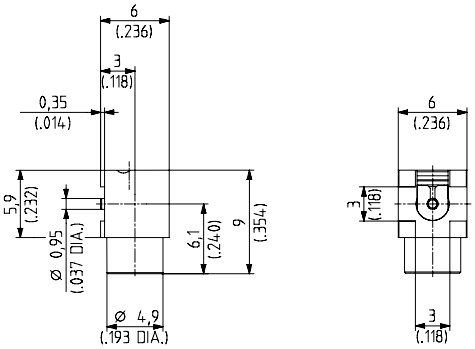

HUBER+SUHNER type	Item no.	Packaging	Mounting hole	Notes
85_MCX-S50-0-25/111_NH	**23005091**	bulk 100 pcs.	ML 123	
85_MCX-S50-0-25/111_NM	**84036471**	tape and reel	ML 123	

Cable groups see page 28 | Assembly tools see page 385 | Mounting holes see page 412

SERIES MCX 75 Ω
MICRO MINIATURE CONNECTORS

DESCRIPTION

HUBER+SUHNER MCX 75 Ω connectors are derived from the MCX 50 Ω series but have a characteristic impedance of 75 Ω. They offer outstanding electrical properties up to 6 GHz and allow the transmission of digital signals with high bit rates.

CONTENTS PAGE

INTERFACE DIMENSIONS

Plug (male)

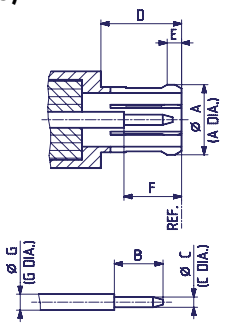

Jack (female)

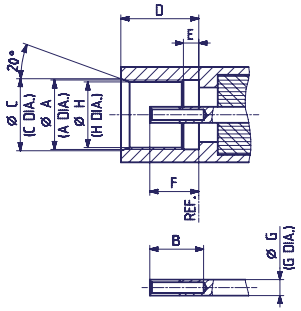

INTERFACE DIMENSIONS (MM / *INCHES*)

	Plug		Jack	
	min.	max.	min.	max.
A	3.72/.146*	3.80/.150*	3.60/.142	3.70/.146
B	2.49/.098	2.59/.102	2.80/.110	–
C	0.48/.019	0.53/.021	3.75/.148	3.85/.152
D	4.15/.163	–	4.00/.157	4.12/.162
E	0.70/.028	0.75/.030	0.75/.030	0.85/.033
F	2.80/.110	3.20/.126	2.30/.091	2.80/.110
G	0.83/.033 nom.		0.83/.033 nom.	
H			3.42/.135	3.48/.137

* prior to slotting

Interface dimensions conformable to the Standards:

Intermateable with MCX 50 Ω connectors acc. to CECC 22220.

IP rating (interface, mated) IP50

TECHNICAL DATA

ELECTRICAL DATA	TEST REQUIREMENTS
Impedance	75 Ω
Frequency range	DC ... 6 GHz
Dielectric withstanding voltage (at sea level)	≥ 500 V rms, 50 Hz (depending on cable)
Working voltage (at sea level) - unmated	≥ 170 V rms, 50 Hz (depending on cable)
Working voltage (at 21 000 m / *70 000 ft.*) - unmated	≥ 45 V rms, 50 Hz (depending on cable)
Insulation resistance	≥ 10^3 MΩ
Contact resistance - centre contact - outer contact	 ≤ 5.0 mΩ ≤ 2.5 mΩ

MECHANICAL DATA	REQUIREMENTS
Engagement force	≤ 25 N / *5.6 lbs*
Disengagement force	8 N ... 20 N / *1.8 lbs ... 4.5 lbs*
Contact captivation	≥ 10 N / *2.3 lbs*
Cable retention force[1)]	see pages 28 – 34
Durability (matings)	≥ 500

1) Value considers maximum load of the cables without irreversible variations of specifications.

ENVIRONMENTAL DATA	TEST CONDITIONS
Temperature range	– 65° C ... + 165° C / – 85°F ... + 329 °F
Climatic category	IEC → 55 / 155 / 21
Thermal shock	MIL-STD-202, Method 107, Condition F
Moisture resistance	MIL-STD-202, Method 106
Corrosion	Saltspray test acc. to MIL-STD-202, Method 101, Condition B
Vibration	MIL-STD-202, Method 204, Condition D

MATERIAL DATA		
CONNECTOR PARTS	**MATERIAL**	**PLATING**
Pin contacts	brass	SUCOPRO / gold
Body	brass	SUCOPRO / SUCOPLATE®
Socket contacts	copper-beryllium alloy	SUCOPRO/gold
Outer contacts (resilient)	copper-beryllium alloy	SUCOPRO/gold
Crimp ferrules	copper	SUCOPLATE® / SUCOPRO
Insulators	PTFE or PFA	

Some connectors may have a specification that differs from the above mentioned data.

The products are designed and guaranteed to pass the above mentioned test procedures. Any additional or different requirement arising from specific applications or environmental conditions which is not covered by these test procedures is subject to request.

CABLE CONNECTORS

Straight cable plugs (male)

> HUBER+SUHNER® full crimp

> taper sleeves see page 406

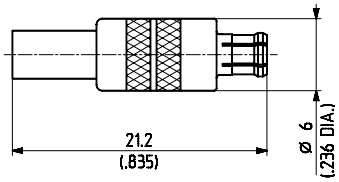

HUBER+SUHNER type	Item no.	Cable group (example)	Packaging	Assembly instruction	Crimp insert
11_MCX-75-2-1/113_NE	**22646946**	U5 (RG 187 A/U)	single	9196	1 A
11_MCX-75-2-6/113_NE	**22650698**	R8 (K 02253 D-02)	single	9196	1 A

Right angle cable plugs (male)

> cable entry crimp

> centre contact soldered

> taper sleeves see page 406

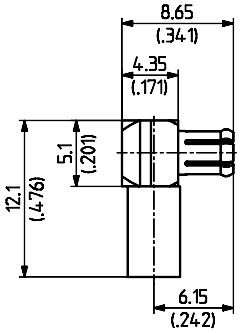

HUBER+SUHNER type	Item no.	Cable group (example)	Packaging	Assembly instruction	Crimp insert
16_MCX-75-2-5/133_NH	**23008072**	U5 (RG 187 A/U)	bulk 100 pcs.	27383	A

Straight bulkhead cable jacks (female)

> HUBER+SUHNER® full crimp

> "snap-on" panel mounting

> taper sleeves see page 406

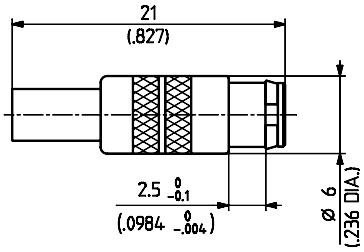

HUBER+SUHNER type	Item no.	Cable group (example)	Packaging	Assembly Instruction/ Mounting Hole	Crimp insert
24_MCX-75-2-1/113_NE	**22646948**	U5 (RG 187 A/U)	single	9196/ML 82	1 A

Cable groups see page 28 Assembly tools see page 385 Mounting holes see page 412

PCB CONNECTORS

Straight PCB jacks (female)

> 2.54 mm / .100 in.

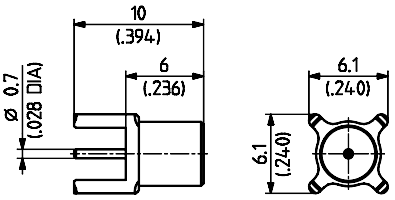

Fig. 1

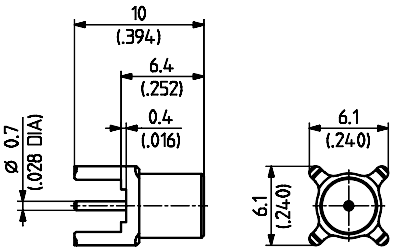

Fig. 2

HUBER+SUHNER type	Item no.	Packaging	Mounting hole	Notes	Fig.
82_MCX-75-0-4/111_NE	**84023729**	single	ML 15	without stand-off	1
82_MCX-75-0-4/111_NH	**23004043**	bulk 100 pcs.	ML 15	without stand-off	1
82_MCX-75-0-5/111_NH	**23004046**	bulk 100 pcs.	ML 15	with stand-off	2

> surface mount type SMT

> edge mount

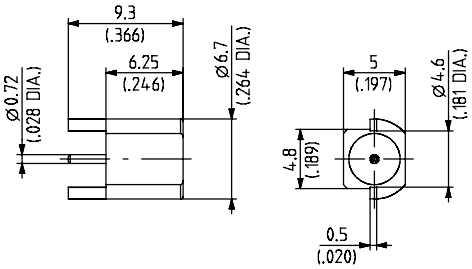

HUBER+SUHNER type	Item no.	Packaging	Notes
82_MCX-S75-0-2/111_NE	**22651011**	single	
82_MCX-S75-0-2/111_NH	**84020046**	bulk 100 pcs.	
82_MCX-S75-0-2/111_NM	**84017665**	Tape and Reel	

Right angle PCB jacks (female)

> 2.54 mm / .100 in.

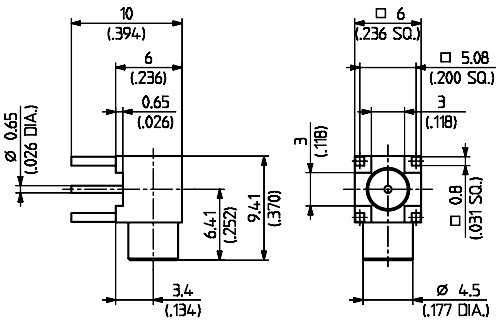

HUBER+SUHNER type	Item no.	Packaging	Mounting hole	Notes
85_MCX-75-0-1/111_NE	**22649202**	single	ML 15	
85_MCX-75-0-1/111_NH	**22650766**	bulk 100 pcs.	ML 15	

Cable groups see page 28 Assembly tools see page 385 Mounting holes see page 412

A FURTHER HUBER+SUHNER PRODUCT!

SEMPER™ – the world's first self-extinguishing lightning protector

Details on this product are to be found in the brochure
Item no. 84015766. Get your copy free of charge at
www.hubersuhner.com.

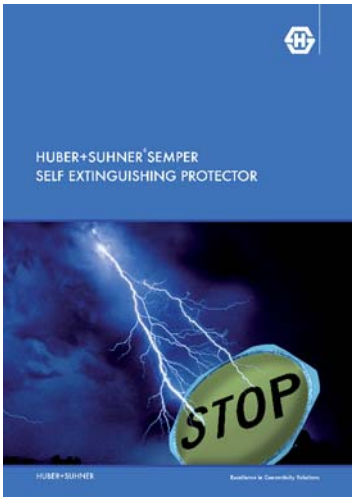

SERIES SMB
SUBMINIATURE CONNECTORS

DESCRIPTION

The HUBER+SUHNER subminiature connectors Series SMB, SMC, SMS have the same basic design. They only differ with regard to their coupling mechanism. HUBER+SUHNER SMB subminiature connectors are suitable for applications from DC up to 4 GHz.

Coupling mechanism:

The SMB snap-on mechanism provides a fast and reliable connection for applications with high packing density.

CONTENTS PAGE

INTERFACE DIMENSIONS

Plug (male)

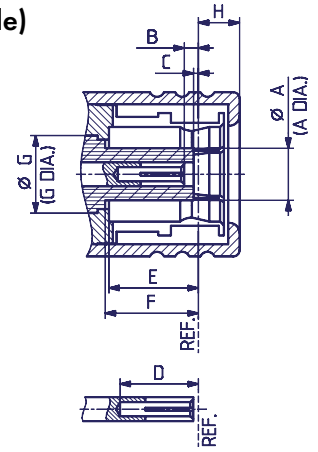

Jack (female)

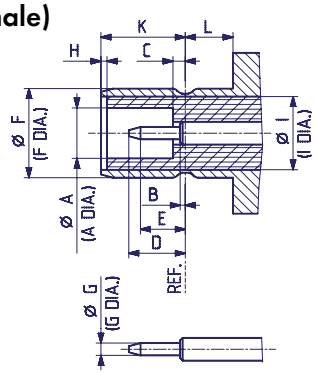

INTERFACE DIMENSIONS (MM / *INCHES*)

	Plug		Jack	
	min.	max.	min.	max.
A	–	2.06/.081	2.08/.082	–
B	0.18/.007	0.94/.037	–	0.18/.007
C	0.18/.007	–	–	0.18/.007
D	2.97/.117	–	–	2.97/.117
E	3.58/.141	–	1.32/.052	–
F	3.58/.141	–	3.66/.144	3.71/.146
G	3.05/.120 nom.		0.48/.019	0.53/.021
H	–	1.63/.064	0.00/.000	–
I	–	–	3.05/.120 nom.	
K	–	–	3.33/.131	3.58/.141
L	–	–	1.65/.065	–

Note: HUBER+SUHNER SMB jacks are intermateable with HUBER+SUHNER SMS plugs.

Interface dimensions conformable to the Standards:

International:	**IEC 60169-10**
Europe:	**CECC 22130**
USA:	**MIL-C-39012 SMB**
	Interface MIL-STD-348A/311
Great Britain:	**BS 9210 N 0007 SMB**
France:	**NFC 93562 series KMC**

IP rating (interface, mated) IP50

TECHNICAL DATA

ELECTRICAL DATA	REQUIREMENTS
Impedance	50 Ω
Frequency range	DC ... 4 GHz
Dielectric withstanding voltage (at sea level)	750 V rms, 50 Hz (depending on cable)
Working voltage (at sea level)	250 V rms for cables with 1 mm / *0.039 in.* dielectric 335 V rms for cables with 2 mm / *0.078 in.* dielectric
Insulation resistance	≥ 10^4 MΩ
Contact resistance - centre contact - outer contact	 ≤ 5 mΩ ≤ 2.5 mΩ
RF-leakage (measured at 1 GHz)	≥ 55 dB

MECHANICAL DATA	REQUIREMENTS
Engagement force	8 N ... 63 N / *1.8 lbs ... 14.2 lbs*
Disengagement force	8 N ... 63 N / *1.8 lbs ... 14.2 lbs*
Contact captivation	≥ 18 N / *4.0 lbs*
Cable retention force[1)]	see pages 28 – 34
Durability (matings)	≥ 500

1) Value considers maximum load of the cables without irreversible variations of specifications.

ENVIRONMENTAL DATA	TEST CONDITIONS
Temperature range	– 65° C ... + 165° C / – 85 ° F ... + 329 ° F
Climatic category	IEC → 55 / 155 / 21
Thermal shock	MIL-STD-202, Method 107, Condition B
Moisture resistance	MIL-STD-202, Method 106
Corrosion	Saltspray test acc. to MIL-STD-202, Method 101, Condition B
Vibration	MIL-STD-202, Method 204, Condition D

MATERIAL DATA		
CONNECTOR PARTS	**MATERIAL**	**PLATING**
Bodies	brass	gold or SUCOPLATE®
Pin contacts	brass	gold
Socket contacts	copper-beryllium alloy	gold
Crimp ferrules	copper / brass	gold or SUCOPLATE®
Springs and washers	copper-beryllium alloy	gold or SUCOPLATE®
Insulators	PTFE or PFA	

Some connectors may have a specification that differs from the above mentioned data.

The products are designed and guaranteed to pass the above mentioned test procedures. Any additional or different requirement arising from specific applications or environmental conditions which is not covered by these test procedures is subject to request.

CABLE CONNECTORS

Straight cable plugs (male)

> for semi-rigid cables

> open entry

> cable entry soldered

> centre contact crimp or soldered

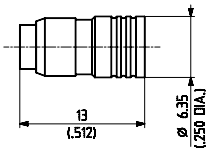

HUBER+SUHNER type	Item no.	Cable group (example)	Packaging	Assembly instruction	Crimp insert
11_SMB-50-2-13/111_NH	**22658765**	Y3, Y11 (EZ 86)	bulk 100 pcs.	9002	1

> for flexible cables

> closed entry

> HUBER+SUHNER® full crimp

> taper sleeves see page 406

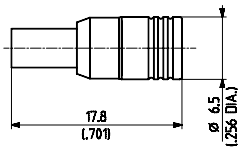

HUBER+SUHNER type	Item no.	Cable group (example)	Packaging	Assembly instruction	Crimp insert
11_SMB-50-1-40/111_NH	**22650186**	U1 (RG 178 B/U)	bulk 100 pcs.	3077	1A
11_SMB-50-2-40/111_NH	**23017717**	U2 (RG 316/U)	bulk 100 pcs.	3077	1A
11_SMB-50-2-41/111_NH	**22650536**	U4 (K 02252 D)	bulk 100 pcs.	3077	1A

Right angle cable plugs (male)

> for semi-rigid cables

> closed entry

> cable entry soldered

> centre contact soldered

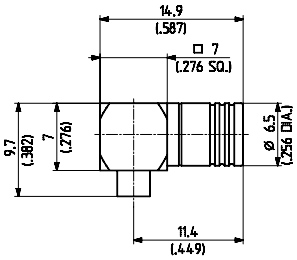

HUBER+SUHNER type	Item no.	Cable group (example)	Packaging	Assembly instruction	Notes
16_SMB-50-2-23/111_NE	**22644079**	Y3, Y11 (EZ 86)	single	9160	

Cable groups see page 28 | Assembly tools see page 385 | Mounting holes see page 412

> for flexible cables

> closed entry

> HUBER+SUHNER® full crimp

> taper sleeves see page 406

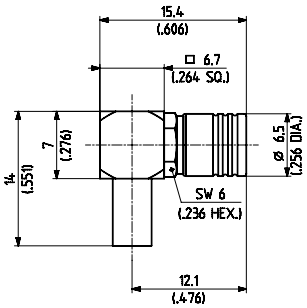

HUBER+SUHNER type	Item no.	Cable group (example)	Packaging	Assembly instruction	Crimp insert
16_SMB-50-1-40/111_NE	**22648053**	U1 (RG 178 B/U)	single	3096	1A
16_SMB-50-2-40/111_NH	**22650695**	U2 (RG 316/U)	bulk 100 pcs.	3096	1A
16_SMB-50-2-41/111_NH	**22660335**	U4 (K 02252 D)	bulk 100 pcs.	3096	1A

> for flexible cables

> closed entry

> cable entry crimp

> centre contact soldered

> taper sleeves see page 406

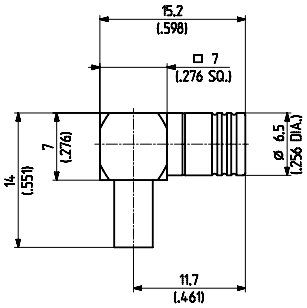

HUBER+SUHNER type	Item no.	Cable group (example)	Packaging	Assembly instruction	Crimp insert
16_SMB-50-1-50/111_NE	**22648056**	U1 (RG 178 B/U)	single	9157	A
16_SMB-50-2-50/111_NH	**23011371**	U2 (RG 316/U)	bulk 100 pcs.	9157	A
16_SMB-50-2-51/111_NH	**22658985**	U4 (K 02252 D)	bulk 100 pcs.	9157	A

Cable groups see page 28 Assembly tools see page 385 Mounting holes see page 412

Straight cable jacks (female)

> for semi-rigid cables

> cable entry soldered

> centre contact crimp or soldered

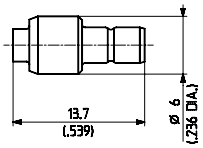

HUBER+SUHNER type	Item no.	Cable group (example)	Packaging	Assembly instruction	Crimp insert
21_SMB-50-2-13/111_NE	**22543425**	Y3, Y11 (EZ 86)	single	9002	1

> for flexible cables

> HUBER+SUHNER® full crimp

> taper sleeves see page 406

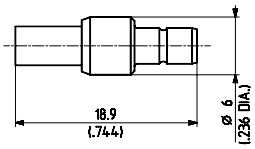

HUBER+SUHNER type	Item no.	Cable group (example)	Packaging	Assembly instruction	Crimp insert
21_SMB-50-1-10/111_NE ⊞	**22543424**	U1 (RG 178 B/U)	single	3077	1A
21_SMB-50-2-10/111_NH	**22651810**	U2 (RG 316/U)	bulk 100 pcs.	3077	1A
21_SMB-50-2-11/111_NE	**22642407**	U4 (K 02252 D)	single	3077	1A

Straight bulkhead cable jacks (female)

> for semi-rigid cables

> cable entry soldered

> centre contact crimp or soldered

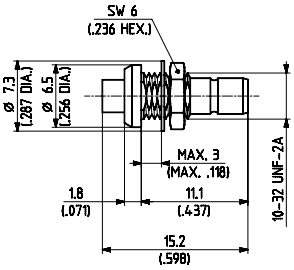

HUBER+SUHNER type	Item no.	Cable group (example)	Packaging	Assembly instruction/ Mounting hole	Crimp insert
24_SMB-50-2-13/111_NE ⊞	**22640822**	Y3, Y11 (EZ 86)	single	9002 / ML 11	1

⊞ **centre contact NOT captivated**

Cable groups see page 28 Assembly tools see page 385 Mounting holes see page 412

> for flexible cables

> HUBER+SUHNER® full crimp

> rear mounting

> taper sleeves see page 406

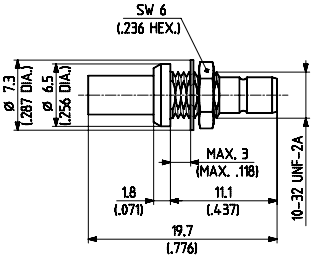

Fig. 1

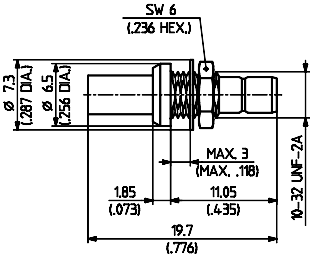

Fig. 2

SMB

HUBER+SUHNER type	Item no.	Cable group (example)	Packaging	Assembly instruction	Crimp insert	Fig.
24_SMB-50-1-10/111_NE ⊞	**22543631**	U1 (RG 178 B/U)	single	3077	1A	1
24_SMB-50-2-110/111_NH	**22659126**	U2 (RG 316/U)	bulk 100 pcs.	3077	1A	2
24_SMB-50-2-111/111_NH	**22659130**	U4 (K 02252 D)	bulk 100 pcs.	3077	1A	2

mounting hole ML 11

RECEPTACLES WITH SOLDER END

Receptacles, jacks (female)

> bulkhead mounted

> rear mounting

> insulating washers see page 408

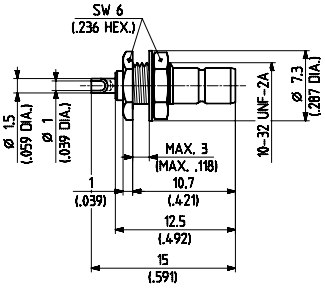

HUBER+SUHNER type	Item no.	Packaging	Mounting hole
22_SMB-50-0-3/111_NE	**22640207**	single	ML 11

⊞ **centre contact NOT captivated**

Cable groups see page 28 | Assembly tools see page 385 | Mounting holes see page 412

> bulkhead mounted
> hermetically sealed
> suited for microstrip-circuits for direct soldering (250 °C / 482° F max.)
> RoHS compliant alternative on request

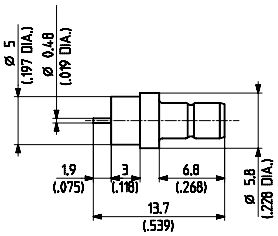

HUBER+SUHNER type	Item no.	Packaging	Mounting hole	VSWR DC...3 GHz	3...4 GHz	Leak rate
22_SMB-50-0-5/111_NE	**22640209**	single	ML 90	≤ 1.2	≤ 1.4	≤ 10^{-8} Torr. l/sec.(*atm cc/s*)

> bulkhead mounted
> non protrusive
> front mounting

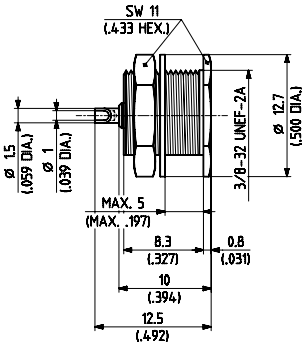

HUBER+SUHNER type	Item no.	Packaging	Mounting hole
22_SMB-50-0-11/111_NE	**22640210**	single	ML 2

> bulkhead mounted
> front mounting
> insulating washers see page 408

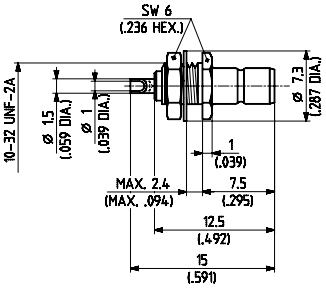

HUBER+SUHNER type	Item no.	Packaging	Mounting hole	Plating body	Notes
22_SMB-50-0-2/133_NH	**22651503**	bulk 100 pcs.	ML 11	SUCOPLATE®	

Cable groups see page 28 | Assembly tools see page 385 | Mounting holes see page 412

PCB CONNECTORS

Straight PCB plugs (male)

> open entry
> surface mount type SMT
> edge mount

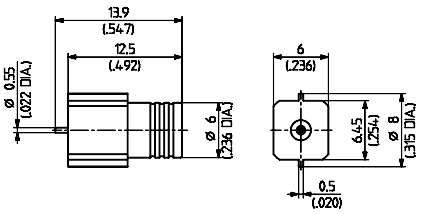

HUBER+SUHNER type	Item no.	Packaging	Mounting hole	Notes
81_SMB-S50-0-4/111_NM	**23001011**	tape and reel	ML 131	

Straight PCB jacks (female)

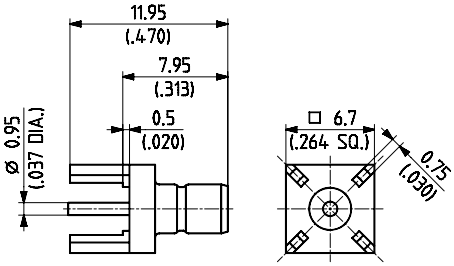

> with stand-off

Fig. 1

> with stand-off

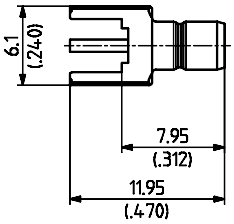

Fig. 2

> without stand-off

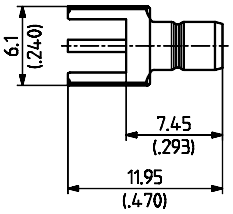

Fig. 3

HUBER+SUHNER type	Item no.	Packaging	Mounting hole	Plating body	Fig.	Notes
82_SMB-50-0-1/111_NH	**23017254**	bulk 100 pcs.	ML 15	SUCOPRO	1	2.54 mm / .100 in. grid
82_SMB-50-0-17/111_NH	**23010991**	bulk 100 pcs.	ML 15	SUCOPRO	2	2.54 mm / .100 in. grid
82_SMB-50-0-17/111_NM	**23013254**	tape and reel	ML 15	SUCOPRO	2	2.54 mm / .100 in. grid
82_SMB-50-0-19/111_NH	**23011018**	bulk 100 pcs.	ML 15	SUCOPRO	3	2.54 mm / .100 in. grid

Cable groups see page 28 Assembly tools see page 385 Mounting holes see page 412

> surface mount type SMT

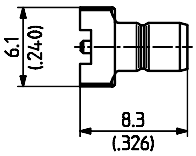

HUBER+SUHNER type	Item no.	Packaging	Mounting hole	Plating body	Notes
82_SMB-S50-0-18/111_NH	**23010995**	bulk 100 pcs.	ML 122	SUCOPRO	

Right angle PCB jacks (female)

> with stand-off

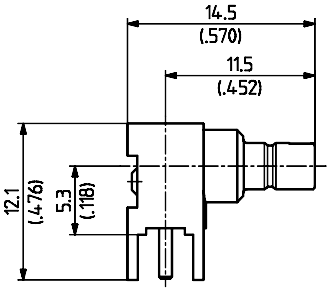

HUBER+SUHNER type	Item no.	Packaging	Mounting hole	Plating body	Notes
85_SMB-Z50-0-19/111_NH	**23010999**	bulk 100 pcs.	ML 15	SUCOPRO	2.54 mm / .100 *in.* grid

Cable groups see page 28 Assembly tools see page 385 Mounting holes see page 412

SERIES SMC
SUBMINIATURE CONNECTORS

DESCRIPTION

The HUBER+SUHNER SMC subminiature connector series is based on the same design as the SMB and SMS series. But due to its screw-on coupling mechanism, the HUBER+SUHNER SMC subminiature connectors are suitable for applications up to 10 GHz.

Coupling mechanism:

The SMC screw-on mechanism permits a vibration-proof connection suitable for semi-permanent connections and for use in mobile equipment with low VSWR requirements.

CONTENTS PAGE

INTERFACE DIMENSIONS

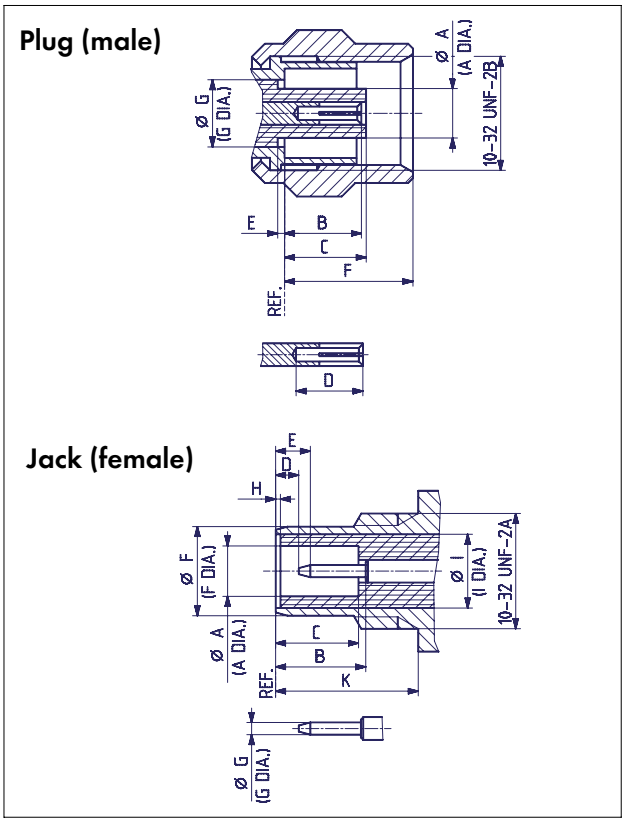

INTERFACE DIMENSIONS (*MM / INCHES*)

	Plug		Jack	
	min.	max.	min.	max.
A	–	2.60/.081	2.08/.082	–
B	2.85/.112	3.40/.134	3.40/.134	–
C	–	3.40/.134	3.40/.134	–
D	2.79/.110	–	0.61/.024	–
E	0.00/.000	–	–	2.13/.084
F	–	5.92/.233	–	3.71/.146
G	3.05/.120 nom.		0.48/.019	0.53/.021
H	–	–	0.00/.000	–
I	–	–	3.05/.120 nom.	
K	–	–	5.94/.234	–

Interface dimensions conformable to the Standards:

International:	**IEC 60169-9**
Europe:	**CECC 22140**
USA:	**MIL-C-39012 SMC**
	Interface MIL-STD-348A/312
Great Britain:	**BS 9210 N 0009 SMC**
France:	**NFC 93561 series KMV**
Germany:	**VG 95286**

IP rating (interface, mated) IP50

TECHNICAL DATA

ELECTRICAL DATA	REQUIREMENTS
Impedance	50 Ω
Frequency range	DC ... 10 GHz
Dielectric withstanding voltage (at sea level)	750 V rms, 50 Hz (depending on cable)
Working voltage (at sea level)	250 V rms for cables with 1 mm / *0.039 in.* dielectric 335 V rms for cables with 2 mm / *0.078 in.* dielectric
Insulation resistance	≥ 10^4 MΩ
Contact resistance - centre contact - outer contact	 ≤ 5 mΩ ≤ 2.5 mΩ
RF-leakage (measured at 1 GHz)	≥ 90 dB

MECHANICAL DATA	REQUIREMENTS
Coupling nut torque - recommended - proof torque	 25 Ncm ... 35 Ncm / *2.2 in. lbs ... 3.1 in. lbs* 71 Ncm / *6.2 in. lbs*
Coupling nut retention force	≥ 150 N / *33.72 lbs*
Contact captivation	≥ 10 N / *2.25 lbs*
Cable retention force[1)]	see pages 28 – 34
Durability (matings)	≥ 500

1) Value considers maximum load of the cables without irreversible variations of specifications.

ENVIRONMENTAL DATA	TEST CONDITIONS
Temperature range	– 65° C ... + 165° C / – *85 ° F ... + 329 ° F*
Climatic category	IEC → *55 / 155 / 21*
Thermal shock	MIL-STD-202, Method 107, Condition B
Moisture resistance	MIL-STD-202, Method 106
Corrosion	Saltspray test acc. to MIL-STD-202, Method 101, Condition B
Vibration	MIL-STD-202, Method 204, Condition D

MATERIAL DATA		
CONNECTOR PARTS	**MATERIAL**	**PLATING**
Bodies	brass	gold
Pins contacts	brass	gold
Socket contacts	copper-beryllium alloy	gold
Crimp ferrules	copper / brass	gold
Springs	copper-beryllium alloy	gold
Insulators	PTFE or PFA	

Some connectors may have a specification that differs from the above mentioned data.

The products are designed and guaranteed to pass the above mentioned test procedures. Any additional or different requirement arising from specific applications or environmental conditions which is not covered by these test procedures is subject to request.

CABLE CONNECTORS

Straight cable plugs (male)

> for semi-rigid cables

> cable entry soldered

> centre contact soldered

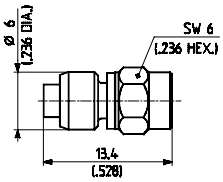

HUBER+SUHNER type	Item no.	Cable group (example)	Packaging	Assembly instruction	Notes
11_SMC-50-2-13/111_NH	**22650675**	Y3, Y11 (EZ 86)	bulk 100 pcs.	9002	

> for flexible cables

> cable entry HUBER+SUHNER® pressure-sleeve

> centre contact soldered

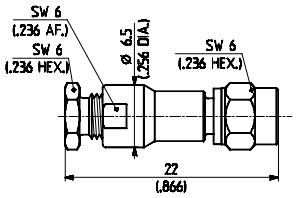

HUBER+SUHNER type	Item no.	Cable group (example)	Packaging	Assembly instruction	Notes
11_SMC-50-1-6/111_NE	**22640238**	U1 (RG 178 B/U)	single	3041	
11_SMC-50-2-5/111_NE	**22640246**	U2 (RG 316/U)	single	3041	

> for flexible cables

> HUBER+SUHNER® full crimp

> taper sleeves see page 406

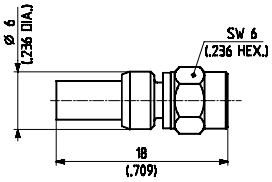

HUBER+SUHNER type	Item no.	Cable group (example)	Packaging	Assembly instruction	Crimp insert
11_SMC-50-1-10/111_NH	**22648629**	U1 (RG 178 B/U)	bulk 100 pcs.	3077	1A
11_SMC-50-2-10/111_NH	**22645841**	U2 (RG 316/U)	bulk 100 pcs.	3077	1A
11_SMC-50-2-10/133_NE	**22641528**	U2 (RG 316/U)	single	3077	1A
11_SMC-50-2-11/111_NE	**22640251**	U4 (K 02252 D)	single	3077	1A

Cable groups see page 28 Assembly tools see page 385 Mounting holes see page 412

Right angle cable plugs (male)

> for semi-rigid cables

> cable entry soldered

> centre contact soldered

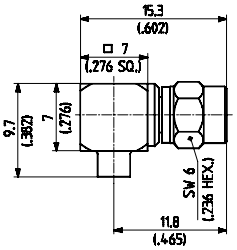

HUBER+SUHNER type	Item no.	Cable group (example)	Packaging	Assembly instruction	Notes
16_SMC-50-2-25/111_NE	**22644126**	Y3, Y11 (EZ 86)	single	9160	
16_SMC-50-2-25/111_NH	**23003713**	Y3, Y11 (EZ 86)	bulk 100 pcs.	9160	

> for flexible cables

> cable entry HUBER+SUHNER® pressure-sleeve

> centre contact soldered

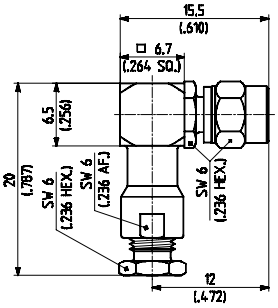

HUBER+SUHNER type	Item no.	Cable group (example)	Packaging	Assembly instruction	Notes
16_SMC-50-2-5/111_NE	**22640264**	U2 (RG 316/U)	single	3039	

> for flexible cables

> HUBER+SUHNER® full crimp

> taper sleeves see page 406

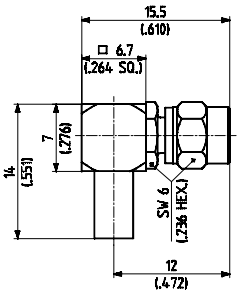

HUBER+SUHNER type	Item no.	Cable group (example)	Packaging	Assembly instruction	Crimp insert
16_SMC-50-1-10/111_NH	**22648283**	U1 (RG 178 B/U)	bulk 100 pcs.	3096	1A
16_SMC-50-2-10/111_NH	**22645323**	U2 (RG 316/U)	bulk 100 pcs.	3096	1A
16_SMC-50-2-11/111_NE	**22543366**	U4 (K 02252 D)	single	3096	1A

Cable groups see page 28 | Assembly tools see page 385 | Mounting holes see page 412

> for flexible cables

> cable entry crimp

> centre contact soldered

> taper sleeves see page 406

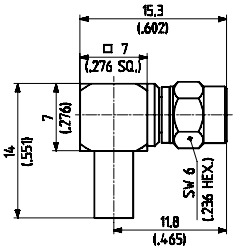

HUBER+SUHNER type	Item no.	Cable group (example)	Packaging	Assembly instruction	Crimp insert
16_SMC-50-1-20/111_NE	**22644083**	U1 (RG 178 B/U)	single	9157	A
16_SMC-50-2-20/111_NE	**22643949**	U2 (RG 316/U)	single	9157	A

Straight cable jacks (female)

> for flexible cables

> HUBER+SUHNER® full crimp

> taper sleeves see page 406

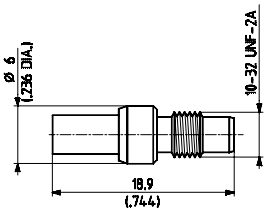

HUBER+SUHNER type	Item no.	Cable group (example)	Packaging	Assembly instruction	Crimp insert
21_SMC-50-2-10/111_NE	**22640279**	U2 (RG 316/U)	single	3077	1 A
21_SMC-50-2-11/111_NE	**22644232**	U4 (K 02252 D)	single	3077	1 A

Straight bulkhead cable jacks (female)

> for semi-rigid cables

> cable entry soldered

> centre contact soldered

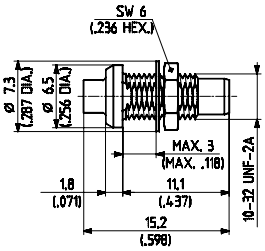

HUBER+SUHNER type	Item no.	Cable group (example)	Packaging	Assembly instruction	Mounting hole
24_SMC-50-2-13/111_NH	**22650209**	Y3, Y11 (EZ 86)	bulk 100 pcs.	9002	ML 11

Cable groups see page 28 | Assembly tools see page 385 | Mounting holes see page 412

> for flexible cables

> HUBER+SUHNER® full crimp

> rear mounting

> taper sleeves see page 406

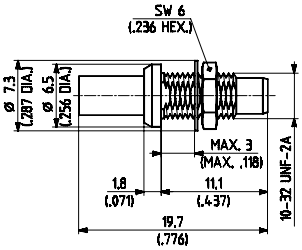

HUBER+SUHNER type	Item no.	Cable group (example)	Packaging	Assembly instruction	Mounting hole	Crimp insert
24_SMC-50-1-10/111_NH ⊞	**22648484**	U1 (RG 178 B/U)	bulk 100 pcs.	3077	ML 11	1 A
24_SMC-50-2-110/111_NH	**22660135**	U2 (RG 316/U)	bulk 100 pcs.	3077	ML 11	1 A

SMC

RECEPTACLES WITH SOLDER END

Receptacles, jacks (female)

> bulkhead mounted

> insulating washers see page 408

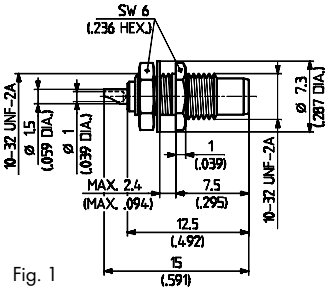

Fig. 1

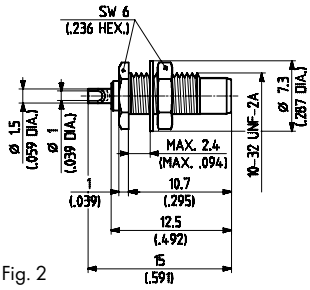

Fig. 2

HUBER+SUHNER type	Item no.	Packaging	Mounting hole	Fig.	Notes
22_SMC-50-0-2/111_NE	**22640281**	single	ML 11	1	front mounting
22_SMC-50-0-3/111_NE	**22640282**	single	ML 11	2	rear mounting
22_SMC-50-0-3/133_NE	**22641428**	single	ML 11	2	rear mounting

⊞ **centre contact NOT captivated**

Cable groups see page 28 | Assembly tools see page 385 | Mounting holes see page 412

PCB CONNECTORS

Straight PCB plugs (male)

> 2.54 mm / *.100 in.* grid

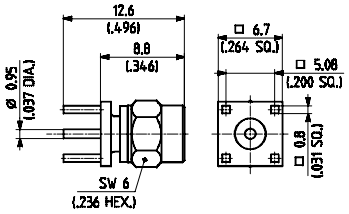

HUBER+SUHNER type	Item no.	Packaging	Mounting hole	Notes
81_SMC-50-0-1/111_NE	**22640312**	single	ML 15	without stand-off

Straight PCB jacks (female)

> 2.54 mm / *.100 in.* grid

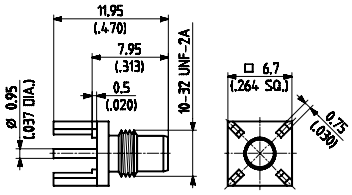

HUBER+SUHNER type	Item no.	Packaging	Mounting hole	Notes
82_SMC-50-0-1/111_NH	**22646201**	bulk 100 pcs.	ML 15	with stand-off

Right angle PCB jacks (female)

> 2.54 mm / *.100 in.* grid

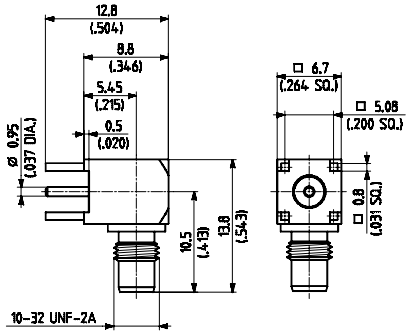

HUBER+SUHNER type	Item no.	Packaging	Mounting hole	Notes
85_SMC-50-0-1/111_NE	**22640326**	single	ML 15	with stand-off
85_SMC-50-0-1/111_NH	**22652987**	bulk 100 pcs.	ML 15	with stand-off
85_SMC-50-0-1/133_NE	**22642472**	single	ML 15	with stand-off

Cable groups see page 28 | Assembly tools see page 385 | Mounting holes see page 412

SERIES SMS, SUBMINIATURE CONNECTORS

DESCRIPTION

HUBER+SUHNER SMS connectors are used in applications requiring rapid connection and disconnection, even where space is limited. The small physical size of the connector allows a high packing density to be achieved. These connectors are suitable for applications up to 4 GHz.

The SMB, SMC and SMS series have an identical inner construction, but a different coupling mechanism.
In accordance with the international specifications, plugs are fitted with female center contacts and jacks with male center contacts. To increase the voltage rating, all insulators overlap.

CONTENTS PAGE

INTERFACE DIMENSIONS

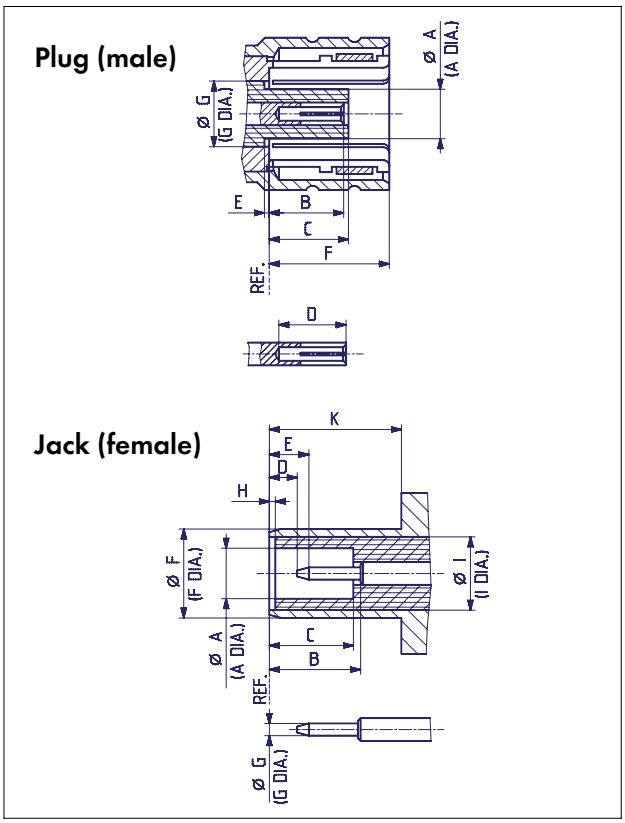

INTERFACE DIMENSIONS (MM / *INCHES*)

	Plug		Jack	
	min.	max.	min.	max.
A	–	2.06/.081	2.08/.082	–
B	2.85/.112	3.40/.134	3.40/.134	–
C	–	3.40/.134	3.40/.134	–
D	2.79/.110	–	0.61/.024	–
E	0.00/.000	–	–	2.13/.084
F	–	5.20/.205	3.66/.144	3.71/.146
G	3.05/.120 nom.		0.48/.019	0.53/.021
H	–	–	0.00/.000	–
I	–	–	3.05/.120 nom.	
K	–	–	5.30/.209	–

Note: HUBER+SUHNER SMS plugs are intermateable with HUBER+SUHNER SMB jacks without any restrictions.

IP rating (interface, mated) IP50

TECHNICAL DATA

ELECTRICAL DATA	REQUIREMENTS
Impedance	50 Ω
Frequency range	DC ... 4 GHz
Dielectric withstanding voltage (at sea level)	750 V rms, 50 Hz (depending on cable)
Working voltage (at sea level)	250 V rms for cables with 1 mm / *0.039 in.* dielectric 335 V rms for cables with 2 mm / *0.078 in.* dielectric
Insulation resistance	≥ 10^4 MΩ
Contact resistance - centre contact - outer contact	 ≤ 5 mΩ ≤ 2.5 mΩ
RF-leakage (measured at 1 GHz)	≥ 55 dB

MECHANICAL DATA	REQUIREMENTS
Engagement force	typ. 8 N / *1.8 lbs*
Disengagement force	typ. 5 N / *1.1 lbs*
Contact captivation	≥ 10 N / *2.25 lbs*
Cable retention force[1)]	see pages 28 – 34
Durability (matings)	≥ 500

1) Value considers maximum load of the cables without irreversible variations of specifications.

ENVIRONMENTAL DATA	TEST CONDITIONS
Temperature range	– 65° C ... + 165° C / – 85 ° F ... + 329 ° F
Climatic category	IEC → 55 / 155 / 21
Thermal shock	MIL-STD-202, Method 107, Condition B
Moisture resistance	MIL-STD-202, Method 106
Corrosion	Saltspray test acc. to MIL-STD-202, Method 101, Condition B
Vibration	MIL-STD-202, Method 204, Condition D

MATERIAL DATA		
CONNECTOR PARTS	**MATERIAL**	**PLATING**
Bodies	brass	gold
Pins contacts	brass	gold
Socket contacts	copper-beryllium alloy	gold
Crimp ferrules	copper / brass	gold
Springs	copper-beryllium alloy	gold
Insulators	PTFE or PFA	

Some connectors may have a specification that differs from the above mentioned data.

The products are designed and guaranteed to pass the above mentioned test procedures. Any additional or different requirement arising from specific applications or environmental conditions which is not covered by these test procedures is subject to request.

CABLE CONNECTORS

Straight cable plugs (male)

> for flexible cables
> closed entry
> HUBER+SUHNER® full crimp
> taper sleeves see page 406

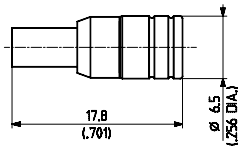

HUBER+SUHNER type	Item no.	Cable group (example)	Packaging	Assembly instruction	Crimp insert
11_SMS-50-1-10/111_NE ⊞	**22543572**	U1 (RG 178 B/U)	single	3077	1 A
11_SMS-50-2-110/111_NH	**23011901**	U2 (RG 316/U)	bulk 100 pcs.	3077	1 A

Right angle cable plugs (male)

> for flexible cables
> open entry
> HUBER+SUHNER® full crimp
> taper sleeves see page 406

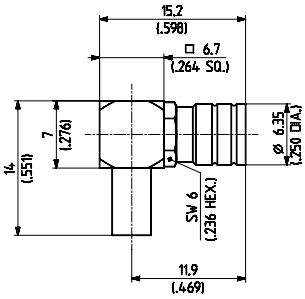

HUBER+SUHNER type	Item no.	Cable group (example)	Packaging	Assembly instruction	Crimp insert
16_SMS-50-1-10/111_NH ⊞	**22649894**	U1 (RG 178 B/U)	bulk 100 pcs.	3096	1 A
16_SMS-50-2-10/111_NE	**22543574**	U2 (RG 316/U)	single	3096	1 A

Straight cable jacks (female)

> for flexible cables
> HUBER+SUHNER® full crimp
> taper sleeves see page 406

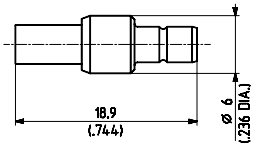

HUBER+SUHNER type	Item no.	Cable group (example)	Packaging	Assembly instruction	Crimp insert	Notes
21_SMB-50-1-10/111_NE ⊞	**22543424**	U1 (RG 178 B/U)	single	3077	1 A	*
21_SMB-50-2-10/111_NH	**22651810**	U2 (RG 316/U)	bulk 100 pcs.	3077	1 A	*

* intermateable with SMS plug without any restrictions

⊞ **centre contact NOT captivated**

Cable groups see page 28 | Assembly tools see page 385 | Mounting holes see page 412

RECEPTACLES WITH SOLDER END

Receptacles, plugs (male)

> open entry
> bulkhead mounted
> front mounting

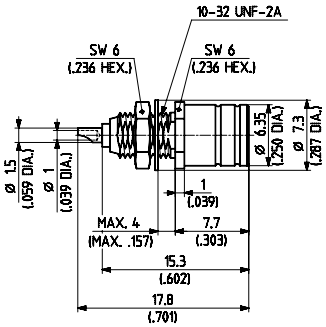

HUBER+SUHNER type	Item no.	Packaging	Mounting hole	Crimp insert
12_SMS-50-0-3/133_NH	**22651812**	bulk 100 pcs.	ML 11	without panel seal

Receptacles, jacks (female)

> bulkhead mounted
> insulating washers see page 408

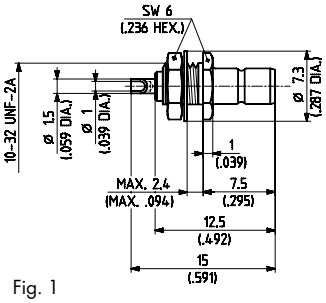

Fig. 1

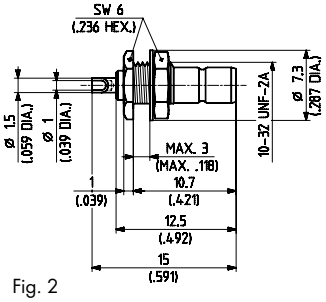

Fig. 2

HUBER+SUHNER type	Item no.	Packaging	Mounting hole	Notes	Fig.
22_SMB-50-0-2/111_NE	**22640206**	single	ML 11	front mounting, intermateable with SMS plug without any restrictions	1
22_SMB-50-0-3/111_NE	**22640207**	single	ML 11	rear mounting, intermateable with SMS plug without any restrictions	2

PCB CONNECTORS

Straight PCB plugs (male)

> open entry
> 2.54 mm / *.100 in.* grid

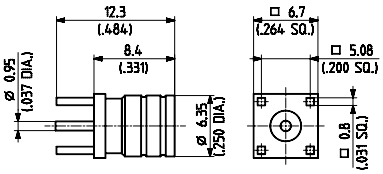

HUBER+SUHNER type	Item no.	Packaging	Mounting hole	Notes
81_SMS-50-0-1/111_NH	**22650093**	bulk 100 pcs.	ML 15	without stand-off

Cable groups see page 28 | Assembly tools see page 385 | Mounting holes see page 412

Straight PCB jacks (female)

> with stand-off

> 2.54 mm / *.100 in.* grid

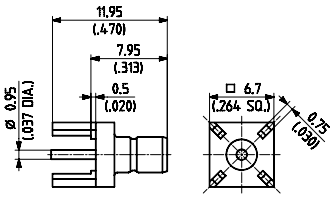

HUBER+SUHNER type	Item no.	Packaging	Mounting hole	Notes
82_SMB-50-0-1/111_NH	**22645143**	bulk 100 pcs.	ML 15	intermateable with SMS plug without any restrictions

Right angle PCB plugs (male)

> open entry

> with stand-off

> 2.54 mm / *.100 in.* grid

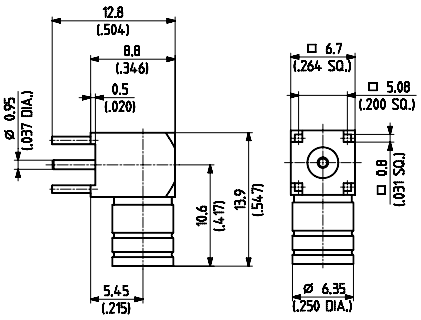

HUBER+SUHNER type	Item no.	Packaging	Mounting hole	Notes
84_SMS-50-0-1/111_NE	**22640377**	single	ML 15	

Right angle PCB jacks (female)

> 2.54 mm / *.100 in.* grid

> with stand-off

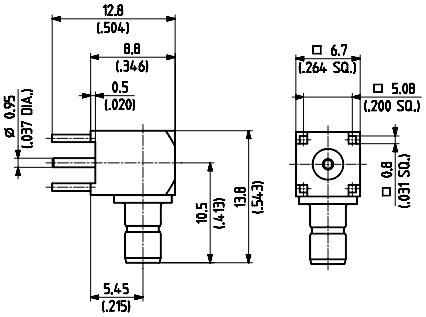

HUBER+SUHNER type	Item no.	Packaging	Mounting hole	Notes
85_SMB-50-0-1/111_NH	**22645989**	bulk 100 pcs.	ML 15	intermateable with SMS plug without any restrictions

Cable groups see page 28 Assembly tools see page 385 Mounting holes see page 412

SERIES SMA, SUBMINIATURE CONNECTORS

DESCRIPTION

HUBER+SUHNER SMA connectors are precision connectors for microwave applications up to 18 GHz. They distinguish themselves through their high mechanical strength, high durability, high reliability and low VSWR.

SMA launchers are the preferred connection element for varied microwave circuits. There is a huge variety of applications for HUBER+SUHNER SMA connectors, such as mobile communication, test & measurement, instruments, avionics, etc.

CONTENTS PAGE

INTERFACE DIMENSIONS

Plug (male)

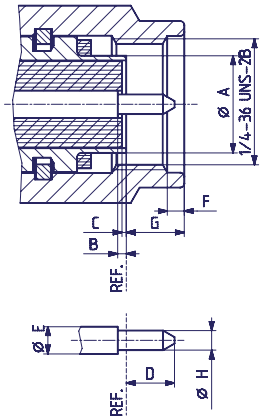

Jack (female)

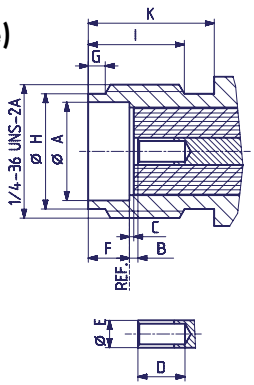

INTERFACE DIMENSIONS (*MM / INCHES*)

	Plug		Jack	
	min.	max.	min.	max.
A	–	4.59/.181	4.59/.181	–
B	0.00/.000	0.25/.010	0.00/.000	0.25/.010
C	0.00/.000	0.25/.010	0.00/.000	0.25/.010
D	–	2.54/.100	2.67/.105	–
E	1.24/.049	1.29/.051	1.24/.049	1.29/.051
F	0.38/.015	1.14/.045	1.88/.074	1.98/.078
G	–	3.43/.135	0.38/.015	1.14/.045
H	0.90/.036	0.94/.037	5.28/.208	5.49/.216
I	–	–	4.32/.170	–
K	–	–	5.54/.218	–

IP rating (interface, mated) IP68

Interface dimensions conformable to the Standards:

International:	**IEC 60169-15**	GB:	**BS 9210 N 0006**
Europe:	**CECC 22110**	F:	**NF-C-93563 (KMR)**
USA:	**MIL-C-39012, SMA**		
	Interface MIL-STD-348a/310		

TECHNICAL DATA

ELECTRICAL DATA	**MIL-C-39012**				
Cable type		semi-rigid		flexible	
Cable dielectric diameter (mm/*in.*)		1.5 / .066	3 / .117	1.5 / .066	3 / .117
Impedance		50 Ω			
Frequency range for interface		DC ... 18 GHz			
VSWR (typical value)		see table below			
RF-leakage measured at 3 GHz (f in GHz)	3.26	≥ 100 dB-f		≥ 60 dB	
Dielectric withstanding voltage (at sea level, in V rms, 50 Hz)	3.17	1000	1500	750	1000
Working voltage (at sea level, in V rms, 50 Hz)		335	500	250	335
Corona extinction voltage (at 21 000 m/*70 000 ft.*, in V rms, 50 Hz)	3.22	250	375	190	250
Working voltage (at 21 000 m/*70 000 ft.*, in V rms, 50 Hz)		85	125	65	85
RF withstanding voltage at 5 MHz (V rms)	3.23	670	1000	500	670
Insulation resistance	3.11	≥ $5 \cdot 10^3$ MΩ			
Contact resistance - centre contact - outer contact	3.16	≤ 3mΩ ≤ 2.5 mΩ			

TYPICAL VSWR	**FREQUENCY RANGE**					
CONNECTOR TYPE	**1 GHz**	**2.5 GHz**	**5 GHz**	**12.4 GHz**	**18 GHz**	**CABLE GROUP**
straight connectors	1.03	1.03	1.03	1.07	1.08	Y3, Y11
	1.03	1.03	1.04	1.07	1.15	Y5, Y12
	1.05	1.07	1.08			U2, U4
	1.04	1.05	1.07			U7, U9
right angle connectors	1.03	1.05	1.10	1.25		Y3, Y11
	1.03	1.05	1.08	1.17		Y5, Y12
	1.05	1.07	1.11			U2, U4
	1.03	1.05	1.07			U7, U9

MECHANICAL DATA	MIL-C-39012	
Recommended coupling nut torque		standard: 0.8 Nm ... 1.1 Nm / *7.1 in. lbs. ... 9.7 in. lbs* brass: 0.45 Nm / *4.0 in. lbs*
Coupling nut retention force	3.25	≥ 270 N / *60.7 lbs*
Contact captivation - axial	3.12	≥ 27 N / *6.1 lbs*
Cable retention force[1)]		see pages 28 – 34
Durability (matings)		≤ 500

1) Value considers maximum load of the cables without irreversible variations of specifications.

ENVIRONMENTAL DATA	TEST CONDITIONS
Temperature range	– 65°C ... + 165°C / – 85 °F ... + 329 °F
Climatic category	IEC → 55/155/21
Thermal shock	MIL-STD-202, Method 107, Condition B
Moisture resistance	MIL-STD-202, Method 106
Corrosion	Saltspray test acc. to MIL-STD-202, Method 101, Condition B
Vibration	MIL-STD-202, Method 204, Condition D
Shock	MIL-STD-202, Method 213, Condition I

MATERIAL DATA		
CONNECTOR PART	**MATERIAL**	**PLATING**
Bodies, outer contacts	copper-beryllium alloy stainless steel brass spring bronze	gold passivated SUCOPLATE®, gold gold
Pin contacts	copper-beryllium alloy, brass	gold
Socket contacts	copper-beryllium alloy spring bronze	gold
Crimp ferrules	copper, brass	gold
Insulators	PTFE or PFA	
Gaskets	silicone rubber	

Some connectors may have a specification that differs from the above mentioned data.

The products are designed and guaranteed to pass the above mentioned test procedures. Any additional or different requirement arising from specific applications or environmental conditions which is not covered by these test procedures is subject to request.

CABLE CONNECTORS

Straight cable plugs (male)

> for semi-rigid cables

> with pin and insulator

> cable entry soldered

> centre contact soldered

> compound 74_Z-0-0-116 needed (see page 398)

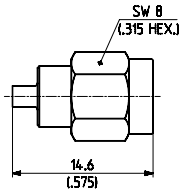

HUBER+SUHNER type	Item no.	Cable group (example)		Packaging	Assembly instruction	Plating body
11_SMA-50-1-1/111_NE	**22642387**	Y1	(EZ 34)	single	9118	gold
11_SMA-50-1-2/111_NE	**22642388**	Y2	(EZ 47)	single	9119	gold

> for semi-rigid cables

> with pin and insulator

> cable entry soldered

> centre contact soldered

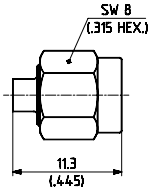

Fig. 1

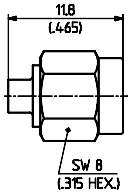

Fig. 2

HUBER+SUHNER type	Item no.	Cable group (example)		Packaging	Assembly instruction	Plating body	Fig.
11_SMA-50-2-15/111_NH ⊞	**22645898**	Y3, Y11	(EZ 86)	bulk 100 pcs.	9056	gold	1
11_SMA-50-2-29/119_NH ⊞	**22660366**	Y3, Y11	(EZ 86)	bulk 100 pcs.	27334	stainless steel[2)]	2[1)]
11_SMA-50-2-65/119_NH ⊞	**22645366**	Y3, Y11	(EZ 86)	bulk 100 pcs.	9056	stainless steel[2)]	1

1) centre contact plugged-in

2) cable entry CuBe/gold

> for semi-rigid cables

> without pin and insulator

> cable entry soldered

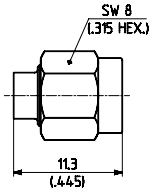

HUBER+SUHNER type	Item no.	Cable group (example)		Packaging	Assembly instruction	Plating body	Notes
11_SMA-50-3-14/-11_NH ⊞	**22644467**	Y5	(EZ 141)	bulk 100 pcs.	9055	gold	26.5 GHz
11_SMA-50-3-64/-19_NH ⊞	**22649224**	Y5	(EZ 141)	bulk 100 pcs.	9055	stainless steel[2)]	26.5 GHz

2) cable entry CuBe/gold

⊞ **centre contact NOT captivated**

Cable groups see page 28 | Assembly tools see page 385 | Mounting holes see page 412

> for semi-rigid cables

> with pin and insulator

> cable entry soldered

> centre contact soldered

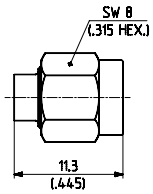

Fig. 1

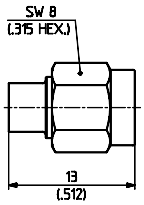

Fig. 2

HUBER+SUHNER type	Item no.	Cable group (example)	Packaging	Assembly instruction	Plating body	Fig.
11_SMA-50-3-15/111_NH ⊞	**22651601**	Y5, Y12 (EZ 141)	bulk 100 pcs.	9056	gold	1
11_SMA-50-3-65/119_NH ⊞	**22646570**	Y5, Y12 (EZ 141)	bulk 100 pcs.	9056	stainless steel[2)]	1
11_SMA-50-3-39/111_YH	**23026120**	Y5, Y12 (EZ 141)	bulk 100 pcs.	150012	SUCOPRO	2[1)]

1) centre contact plugged-in

2) cable entry CuBe/gold

SMA

> for semi-rigid cables

> without pin and insulator

> cable entry soldered

> short version

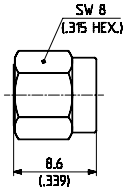

HUBER+SUHNER type	Item no.	Cable group (example)	Packaging	Assembly instruction	Plating body	Notes
11_SMA-50-3-16/-11_NH ⊞	**22644470**	Y5 (EZ 141)	bulk 100 pcs.	9055	gold	26.5 GHz
11_SMA-50-3-42/-33_NH ⊞	**22646128**	Y5 (EZ 141)	bulk 100 pcs.	9055	SUCOPLATE®[1)]	26.5 GHz
11_SMA-50-3-66/-19_NH ⊞	**22645207**	Y5 (EZ 141)	bulk 100 pcs.	9055	stainless steel[2)]	26.5 GHz

1) use torque wrench 74_Z-0-0-79

2) cable entry CuBe/gold

> for flexible cables

> cable entry clamp

> centre contact soldered

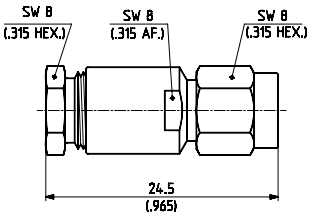

HUBER+SUHNER type	Item no.	Cable group (example)	Packaging	Assembly instruction	Plating body
11_SMA-50-3-7/111_NE	**22640050**	U7 (RG 58 C/U)	single	3071	gold
11_SMA-50-3-8/111_NH	**22648630**	U10 (RG 223/U)	bulk 100 pcs.	3071	gold
11_SMA-50-3-10/111_NE	**22640053**	U10 (RG 223/U)	single	3071	gold

⊞ **centre contact NOT captivated**

Cable groups see page 28 | Assembly tools see page 385 | Mounting holes see page 412

> for flexible cables

> cable entry crimp

> centre contact soldered

> taper sleeves see page 406

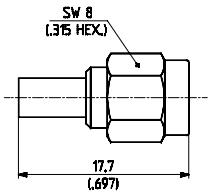

HUBER+SUHNER type	Item no.	Cable group (example)	Packaging	Assembly instruction	Plating body	Crimp insert
11_SMA-50-1-4/111_NE	**22645871**	U1 (RG 178 B/U)	single	27061	gold	A
11_SMA-50-2-5/111_NH	**22646312**	U2 (RG 316/U)	bulk 100 pcs.	27266	gold	A
11_SMA-50-2-6/111_NH	**22650740**	U4 (K 02252 D)	bulk 100 pcs.	27266	gold	A
11_SMA-50-2-27/111_NH	**22652923**	U2 (RG 316/U)	bulk 100 pcs.	27164	gold	1 A [1]
11_SMA-50-2-41/133_NH	**22652160**	U4 (K 02252 D)	bulk 100 pcs.	3069	SUCOPLATE®[2]	A
11_SMA-50-2-42/133_NH	**22648783**	U2 (RG 316/U)	bulk 100 pcs.	27266	SUCOPLATE®[2]	A
11_SMA-50-2-55/199_NE	**22641377**	U2 (RG 316/U)	single	3069	stainless steel	A
11_SMA-50-2-56/199_NH	**22651486**	U4 (K 02252 D)	bulk 100 pcs.	3069	stainless steel	A

1) HUBER+SUHNER® full crimp

2) use torque wrench 74_Z-0-0-79

> for flexible cables

> cable entry crimp

> centre contact soldered

> taper sleeves see page 406

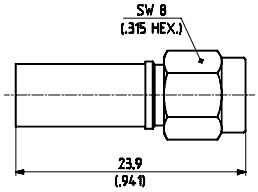

HUBER+SUHNER type	Item no.	Cable group (example)	Packaging	Assembly instruction	Plating body	Crimp insert
11_SMA-50-3-5/111_NE	**22640048**	U7 (RG 58 C/U)	single	3069	gold	B
11_SMA-50-3-6/111_NH	**22650739**	U9, 11 (RG 400/U)	bulk 100 pcs.	3069	gold	B
11_SMA-50-3-45/133_NH	**22645987**	U7 (RG 58 C/U)	bulk 100 pcs.	3069	SUCOPLATE®[1]	B
11_SMA-50-3-46/133_NH	**22651819**	U9, 11 (RG 400/U)	bulk 100 pcs.	3069	SUCOPLATE®[1]	B
11_SMA-50-3-55/199_NE	**22641371**	U7 (RG 58 C/U)	single	3069	stainless steel	B
11_SMA-50-3-56/199_NH	**22648300**	U9, 11 (RG 400/U)	bulk 100 pcs.	3069	stainless steel	B

1) use torque wrench 74_Z-0-0-79

Cable groups see page 28 | Assembly tools see page 385 | Mounting holes see page 412

Right angle cable plugs (male)

> for semi-rigid cables

> cable entry soldered

> centre contact soldered

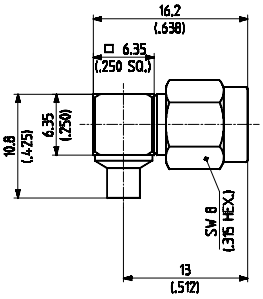

HUBER+SUHNER type	Item no.	Cable group (example)	Packaging	Assembly instruction	Plating body	Notes
16_SMA-50-2-43/133_NE	**22641953**	Y3, Y11 (EZ 86)	single	3068	SUCOPLATE®[1)]	
16_SMA-50-2-53/119_NH	**22646639**	Y3, Y11 (EZ 86)	bulk 100 pcs.	3068	stainless steel[2)]	
16_SMA-50-2-103/111_NH	**22652924**	Y3, Y11 (EZ 86)	bulk 100 pcs.	3068	gold	

1) use torque wrench 74_Z-0-0-79

2) cable entry CuBe/gold

> for semi-rigid cables

> cable entry soldered

> centre contact soldered

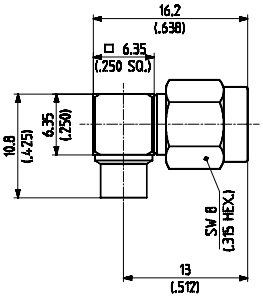

HUBER+SUHNER type	Item no.	Cable group (example)	Packaging	Assembly instruction	Plating body	Notes
16_SMA-50-3-3/111_NH	**22646569**	Y5, Y12 (EZ 141)	bulk 100 pcs.	3068	gold	
16_SMA-50-3-43/133_NE	**22642241**	Y5, Y12 (EZ 141)	single	3070	SUCOPLATE®[1)]	

1) use torque wrench 74_Z-0-0-79

Cable groups see page 28 | Assembly tools see page 385 | Mounting holes see page 412

> for flexible cables

> cable entry crimp

> centre contact soldered

> taper sleeves see page 406

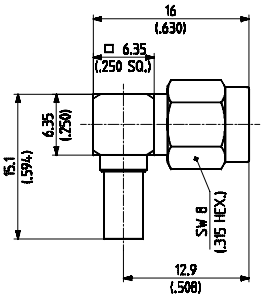

HUBER+SUHNER type	Item no.	Cable group (example)	Packaging	Assembly instruction	Plating body	Crimp insert
16_SMA-50-1-1/111_NH	**22660358**	U1 (RG 178 B/U)	bulk 100 pcs.	3070	gold	A
16_SMA-50-2-105/111_NH	**22651456**	U2 (RG 316/U)	bulk 100 pcs.	3070	gold	A
16_SMA-50-2-106/111_NH	**22651458**	U4 (K 02252 D)	bulk 100 pcs.	3070	gold	A
16_SMA-50-2-141/133_NH	**22651997**	U4 (K 02252 D)	bulk 100 pcs.	3070	SUCOPLATE®1)	A
16_SMA-50-2-145/133_NH	**22652929**	U2 (RG 316/U)	bulk 100 pcs.	3070	SUCOPLATE®1)	A

> for flexible cables

> cable entry crimp

> centre contact soldered

> taper sleeves see page 406

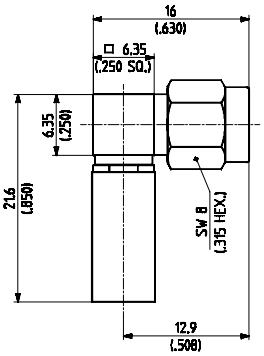

HUBER+SUHNER type	Item no.	Cable group (example)	Packaging	Assembly instruction	Plating body	Crimp insert
16_SMA-50-3-105/111_NH	**22651800**	U7 (RG 58 C/U)	bulk 100 pcs.	3070	gold	B
16 _SMA-50-3-106/111_NH	**22650545**	U9, 11 (RG 400/U)	bulk 100 pcs.	3070	gold	B
16_SMA-50-3-145/133_NE	**22651584**	U7 (RG 58 C/U)	single	3070	SUCOPLATE®1)	B
16_SMA-50-3-146/133_NE	**22649909**	U9, 11 (RG 400/U)	single	3070	SUCOPLATE®1)	B

1) use torque wrench 74_Z-0-0-79

Cable groups see page 28 Assembly tools see page 385 Mounting holes see page 412

Straight cable jacks (female)

> for semi-rigid cables

> cable entry soldered

> centre contact soldered

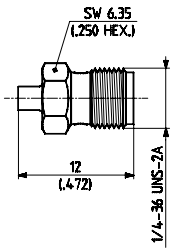

Fig. 1

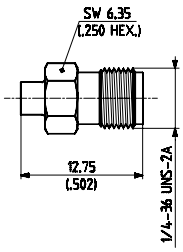

Fig. 2

HUBER+SUHNER type	Item no.	Cable group (example)		Packaging	Assembly instruction	Plating body	Fig.
21_SMA-50-1-1/111_NE	**22642385**	Y1	(EZ 34)	single	9118	gold	1
21_SMA-50-1-2/111_NE	**22642386**	Y2	(EZ 47)	single	9119	gold	1
21_SMA-50-2-15/111_NH ⊞	**22652141**	Y3, Y11	(EZ 86)	bulk 100 pcs.	9057	gold	2

> for semi-rigid cables

> cable entry soldered

> centre contact plugged-in

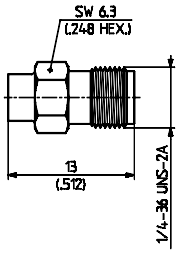

HUBER+SUHNER type	Item no.	Cable group (example)		Packaging	Assembly instruction	Plating body	Notes
21_SMA-50-3-47/111_YE	**23025549**	Y5	(EZ 141)	bulk 100 pcs.	150012	SUCOPRO	

⊞ **centre contact NOT captivated**

Cable groups see page 28 | Assembly tools see page 385 | Mounting holes see page 412

> for flexible cables

> cable entry crimp

> centre contact soldered

> taper sleeves see page 406

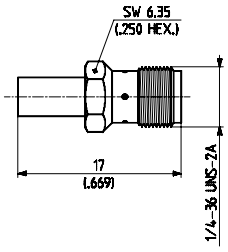

HUBER+SUHNER type	Item no.	Cable group (example)	Packaging	Assembly instruction	Plating body	Crimp insert
21_SMA-50-2-5/111_NE	**22640077**	U2 (RG 316/U)	single	3069	gold	A
21_SMA-50-2-6/111_NH	**22651818**	U4 (K 02252 D)	bulk 100 pcs.	3069	gold	A

> for flexible cables

> cable entry crimp

> centre contact soldered

> taper sleeves see page 406

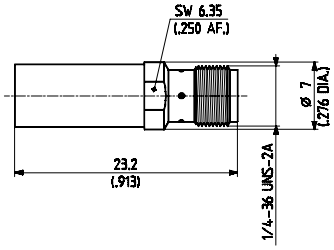

HUBER+SUHNER type	Item no.	Cable group (example)	Packaging	Assembly instruction	Plating body	Crimp insert
21_SMA-50-3-5/111_NE	**22640081**	U7 (RG 58 C/U)	single	3069	gold	B
21_SMA-50-3-6/111_NE	**22640082**	U9, 11 (RG 400/U)	single	3069	gold	B

Straight bulkhead cable jacks (female)

> for semi-rigid cables

> cable entry soldered

> centre contact soldered

> with panel seal

> insulating washers see page 408

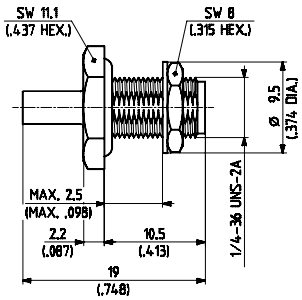

HUBER+SUHNER type	Item no.	Cable group (example)	Packaging	Assembly instruction	Plating body	Mounting hole
24_SMA-50-2-15/111_NH ⊞	**22645490**	Y3, Y11 (EZ 86)	bulk 100 pcs.	9057	gold	ML 35

⊞ **centre contact NOT captivated**

Cable groups see page 28 | Assembly tools see page 385 | Mounting holes see page 412

> for semi-rigid cables

> cable entry soldered

> centre contact soldered

> with panel seal

> insulating washers see page 408

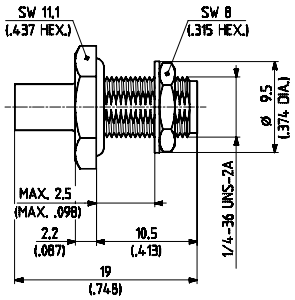

HUBER+SUHNER type	Item no.	Cable group (example)	Packaging	Assembly instruction	Plating body	Mounting hole
24_SMA-50-3-15/111_NH ⊞	**22645259**	Y5, Y12 (EZ 141)	bulk 100 pcs.	9057	gold	ML 35

> for flexible cables

> cable entry crimp

> centre contact soldered

> with panel seal

> taper sleeves see page 406

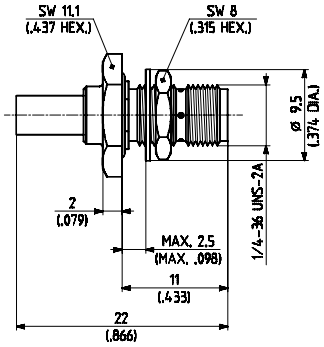

HUBER+SUHNER type	Item no.	Cable group (example)	Packaging	Assembly Instruction/ Mounting Hole	Plating body	Crimp insert
24_SMA-50-2-13/111_NH	**22651719**	U4 (K 02252 D)	bulk 100 pcs.	3069 / ML 20	gold	A
24_SMA-50-2-14/111_NH	**22651747**	U2 (RG 316/U)	bulk 100 pcs.	3069 / ML 20	gold	A
24_SMA-50-2-45/133_NH	**22652352**	U4 (K 02252 D)	bulk 100 pcs.	3069 / ML 20	SUCOPLATE®1)	A
24_SMA-50-2-45/133_UH	**22648472**	U4 (K 02252 D)	bulk 100 pcs.	3069 / ML 20	SUCOPLATE®1)	A
24_SMA-50-2-46/133_NH	**22646565**	U2 (RG 316/U)	bulk 100 pcs.	3069 / ML 20	SUCOPLATE®1)	A

1) use torque wrench 74_Z-0-0-79

⊞ **centre contact NOT captivated**

Cable groups see page 28 | Assembly tools see page 385 | Mounting holes see page 412

> for flexible cables

> cable entry crimp

> centre contact soldered

> taper sleeves see page 406

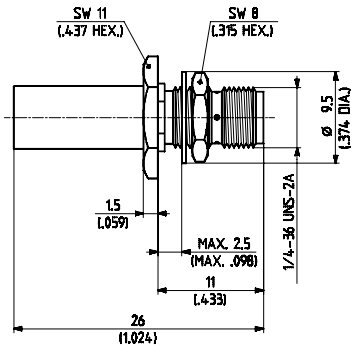

HUBER+SUHNER type	Item no.	Cable group (example)		Packaging	Assembly Instruction/ Mounting Hole	Plating body	Crimp insert
24_SMA-50-3-42/133_NE	**22641358**	U9	(RG 223/U)	single	3072 / ML 20	SUCOPLATE®1)	B

1) use torque wrench 74_Z-0-0-79

Straight panel cable jacks (female)

> for semi-rigid cables

> cable entry soldered

> centre contact soldered

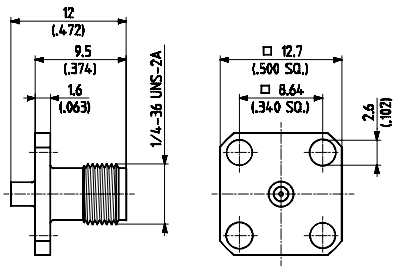

Fig. 1

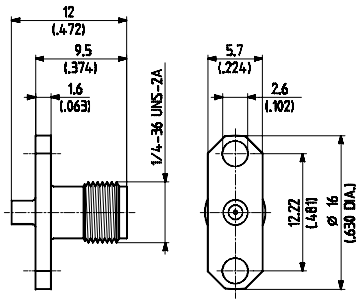

Fig. 2

HUBER+SUHNER type	Item no.	Cable group (example)		Packaging	Assembly instruction/ Mounting hole	Plating body	Fig.
25_SMA-50-1-2/111_NE	**22642390**	Y2	(EZ 47)	single	9119 / ML 19	gold	1
25_SMA-50-1-4/111_NE	**22642391**	Y2	(EZ 47)	single	9119	gold	2

Cable groups see page 28 Assembly tools see page 385 Mounting holes see page 412

> for semi-rigid cables

> cable entry soldered

> centre contact soldered

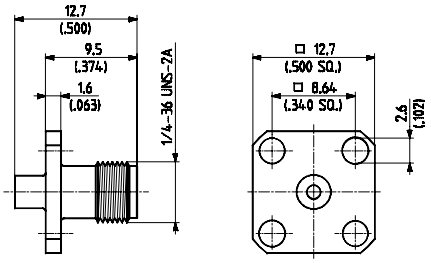

Fig. 1

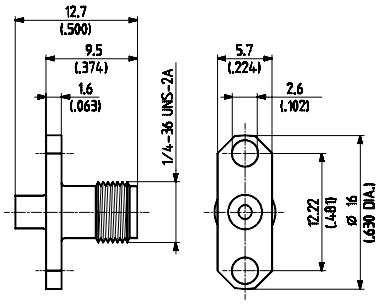

Fig. 2

HUBER+SUHNER type	Item no.	Cable group (example)	Packaging	Assembly instruction/ Mounting hole	Plating body	Fig.
25_SMA-50-2-15/111_NE ⊞	**22544551**	Y3, Y11 (EZ 86)	single	9057 / ML 19	gold	1
25_SMA-50-2-25/111_NE ⊞	**22641493**	Y3, Y11 (EZ 86)	single	9057	gold	2

> for semi-rigid cables

> cable entry soldered

> centre contact soldered

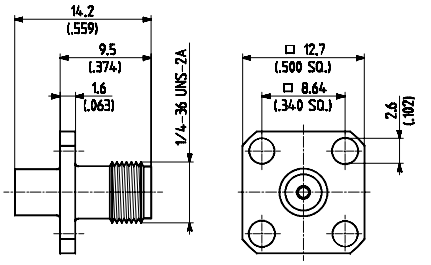

Fig. 1

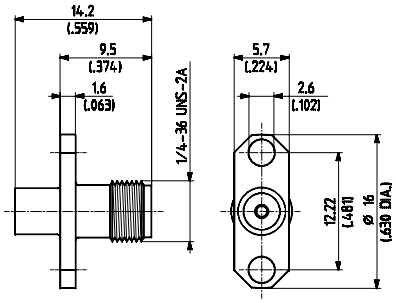

Fig. 2

HUBER+SUHNER type	Item no.	Cable group (example)	Packaging	Assembly instruction/ Mounting hole	Plating body	Fig.
25_SMA-50-3-15/111_NH ⊞	**22644717**	Y5, Y12 (EZ 141)	bulk 100 pcs.	9057 / ML 19	gold	1
25_SMA-50-3-25/111_NH ⊞	**22646563**	Y5, Y12 (EZ 141)	bulk 100 pcs.	9057	gold	2

⊞ **centre contact NOT captivated**

Cable groups see page 28 | Assembly tools see page 385 | Mounting holes see page 412

> for flexible cables

> cable entry crimp

> centre contact soldered

> square flange

> taper sleeves see page 406

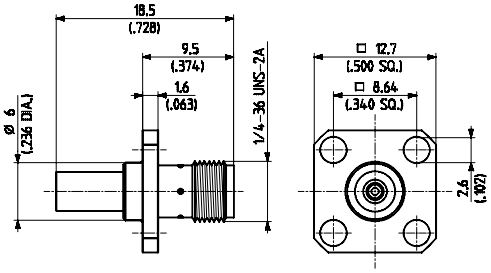

HUBER+SUHNER type	Item no.	Cable group (example)		Packaging	Assembly instruction/ Mounting hole	Plating body	Crimp insert
25_SMA-50-2-5/111_NH	**22650755**	U2	(RG 316/U)	bulk 100 pcs.	3072 / ML 19	gold	A
25_SMA-50-2-6/111_NE	**22640113**	U4	(K 02252 D)	single	3072 / ML 19	gold	A
25_SMA-50-2-46/133_NE	**22642246**	U4	(K 02252 D)	single	3072 / ML 19	SUCOPLATE®1)	A

1) use torque wrench 74_Z-0-0-79

RECEPTACLES WITH SOLDER END

Receptacles, jacks (female)

> bulkhead mounted

> with panel seal

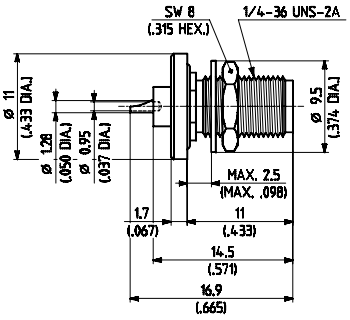

HUBER+SUHNER type	Item no.	Packaging	Plating body	Mounting hole	Notes
22_SMA-50-0-1/111_NE	**22640087**	single	gold	ML 20	rear mounting

Cable groups see page 28 | Assembly tools see page 385 | Mounting holes see page 412

Receptacles, jacks (female)

> rear mounting

> without panel seal

> insulating washers see page 408

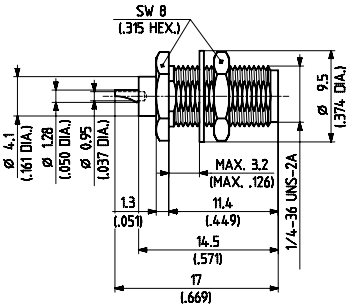

HUBER+SUHNER type	Item no.	Packaging	Plating body	Mounting hole	Notes
22_SMA-50-0-4/111_NH	**22649418**	bulk 100 pcs.	gold	ML 35	
22_SMA-50-0-44/133_NE	**22643518**	single	SUCOPLATE®	ML 35	use torque wrench 74_Z-0-0-79
22_SMA-50-0-203/111_NH	**22652012**	bulk 100 pcs.	gold	ML 35	

SMA

> panel mounted

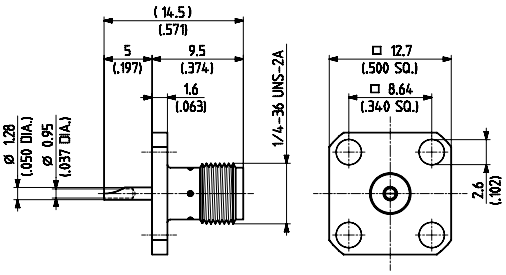

HUBER+SUHNER type	Item no.	Packaging	Plating body	Notes
23_SMA-50-0-1/111_NH	**22651409**	bulk 100 pcs.	gold	
23_SMA-50-0-44/133_NH	**22652098**	bulk 100 pcs.	SUCOPLATE®	use torque wrench 74_Z-0-0-79
23_SMA-50-0-51/199_NE	**22543948**	single	stainless steel	

> panel mounted

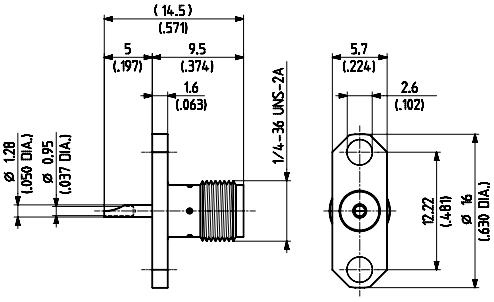

HUBER+SUHNER type	Item no.	Packaging	Plating body	Notes
23_SMA-50-0-11/111_NE	**22640095**	single	gold	
23_SMA-50-0-41/133_NH	**22644383**	bulk 100 pcs.	SUCOPLATE®	use torque wrench 74_Z-0-0-79
23_SMA-50-0-61/199_NE	**22544796**	single	stainless steel	

Cable groups see page 28 Assembly tools see page 385 Mounting holes see page 412

Right angle receptacles, jack (female)

> bulkhead mounted

> without panel seal

> insulating washers see page 408

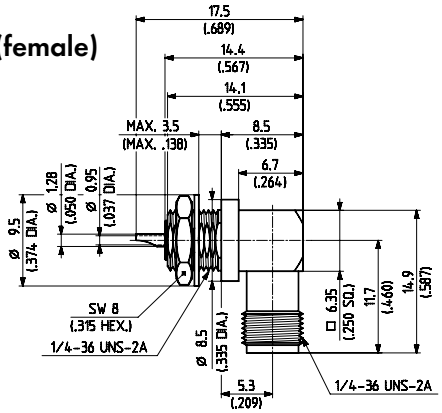

HUBER+SUHNER type	Item no.	Packaging	Plating body	Mounting hole	Notes
27_SMA-50-0-11/111_NE	**22544384**	single	gold	ML 35	

> panel mounted

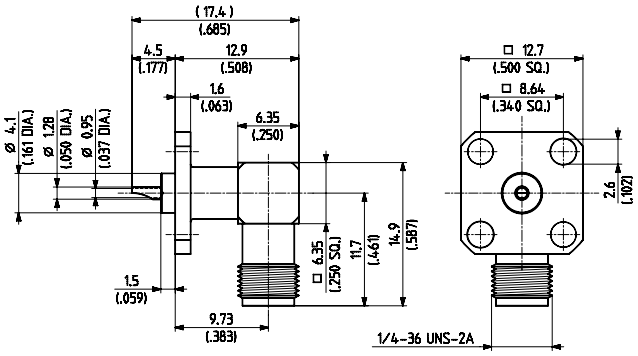

HUBER+SUHNER type	Item no.	Packaging	Plating body	Notes
28_SMA-50-0-1/111_NH	**22650703**	bulk 100 pcs.	gold	
28_SMA-50-0-41/133_NH	**22645468**	bulk 100 pcs.	SUCOPLATE®	use torque wrench 74_Z-0-0-79

RECEPTACLES WITH COAXIAL END

Receptacles, jacks (female)

> bulkhead mounted

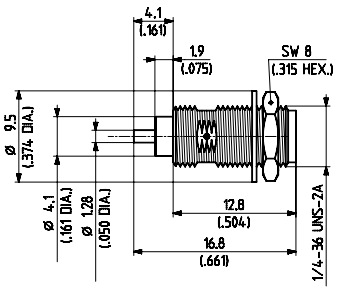

HUBER+SUHNER type	Item no.	Packaging	Plating body	Mounting hole	Notes
22_SMA-50-0-3/111_NE	**22640089**	single	gold	ML 98	tap drill 74_Z-0-0-24
22_SMA-50-0-53/199_NE	**22543498**	single	stainless steel	ML 98	tap drill 74_Z-0-0-24

Cable groups see page 28 Assembly tools see page 385 Mounting holes see page 412

Receptacles, jacks (female)

> panel mounted

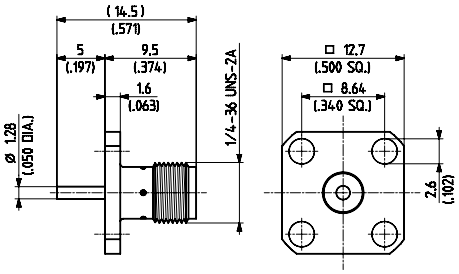

HUBER+SUHNER type	Item no.	Packaging	Plating body	Notes
23_SMA-50-0-21/111_NE	**22640101**	single	gold	flush dielectric

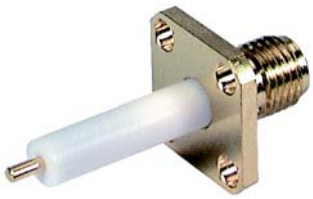

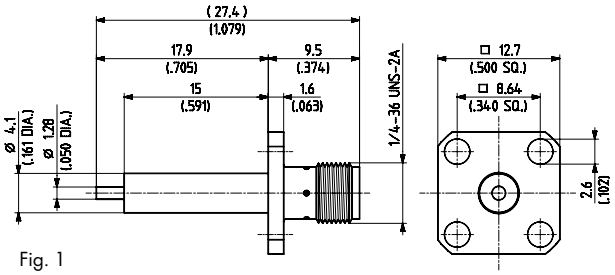

Fig. 1

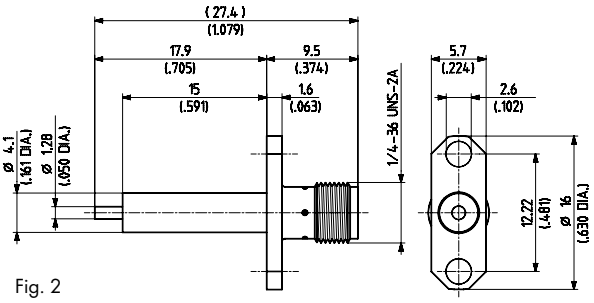

Fig. 2

HUBER+SUHNER type	Item no.	Packaging	Plating body	Notes	Fig.
23_SMA-50-0-3/111_NE	**22640092**	single	gold	extended dielectric	1
23_SMA-50-0-13/111_NH	**22658873**	bulk 100 pcs.	gold	extended dielectric	2
23_SMA-50-0-53/199_NE	**22641394**	single	stainless steel	extended dielectric	1

STRIPLINE LAUNCHERS

Panel launchers, male

> tab contact

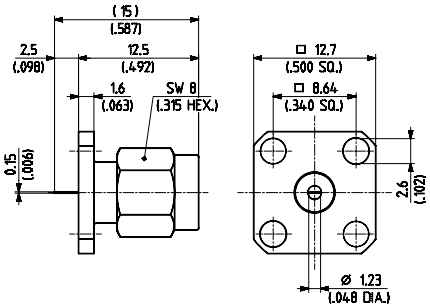

HUBER+SUHNER type	Item no.	Packaging	Plating body	Notes
13_SMA-50-0-2/111_NE	**22640056**	single	gold	flush dielectric

Cable groups see page 28 Assembly tools see page 385 Mounting holes see page 412

Panel launchers, male

> tab contact

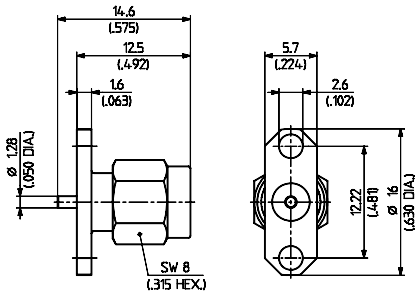

HUBER+SUHNER type	Item no.	Packaging	Plating body	Notes
13_SMA-50-0-141/133_NH	**22649018**	bulk 100 pcs.	SUCOPLATE®1)	flush dielectric

1) use torque wrench 74_Z-0-0-79

Panel launchers, female

> tab contact

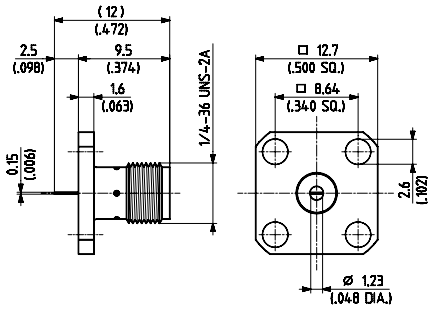

HUBER+SUHNER type	Item no.	Packaging	Plating body	Notes
23_SMA-50-0-2/111_NE	**22640091**	single	gold	flush dielectric
23_SMA-50-0-52/199_NE	**22543487**	single	stainless steel	flush dielectric

> tab contact

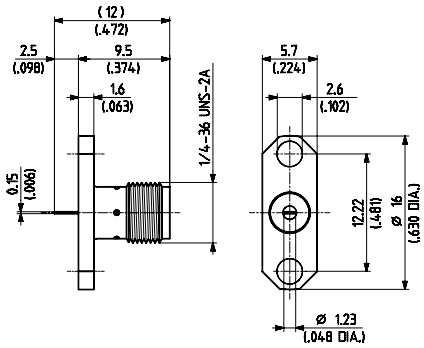

HUBER+SUHNER type	Item no.	Packaging	Plating body	Notes
23_SMA-50-0-12/111_NE	**22640096**	single	gold	flush dielectric
23_SMA-50-0-62/199_NE	**22544779**	single	stainless steel	flush dielectric

Cable groups see page 28 Assembly tools see page 385 Mounting holes see page 412

MICROSTRIP LAUNCHERS

Panel launchers, female

> tab contact, offset

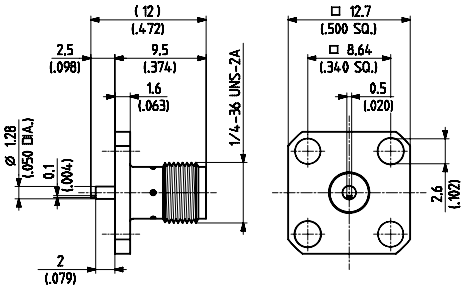

HUBER+SUHNER type	Item no.	Packaging	Plating body	Notes
23_SMA-50-0-4/111_NE	**22640093**	single	gold	flush dielectric

SMA

CONNECTORS WITH HERMETIC SEAL

All hermetic seal SMA connectors use precision glass to metal seals, which are soldered into the connector body.
Caution: max. soldering temperature for hermetic seal SMA connectors is 250°C / *482 °F*.

Receptacle, male, hermetic seal

> "Spark Plug" with metal ring seal
> RoHs compliant alternative on request

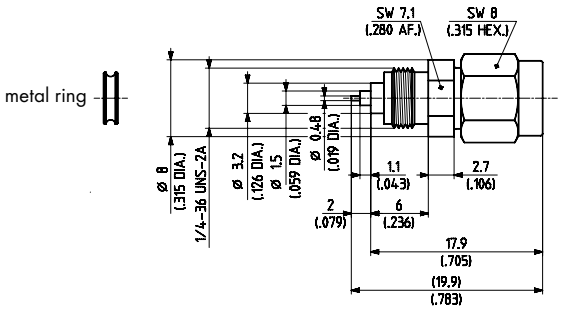

HUBER+SUHNER type	Item no.	Packaging	Plating body	Mounting hole	Notes
12_SMA-50-0-110/111_NE	**22652315**	single	gold	ML 42	pressure max. 200 N/cm^2 *(290 psi)*

Cable groups see page 28 | Assembly tools see page 385 | Mounting holes see page 412

Receptacle, female, hermetic seal

> "Spark Plug" with metal ring seal

> RoHS compliant alternative on request

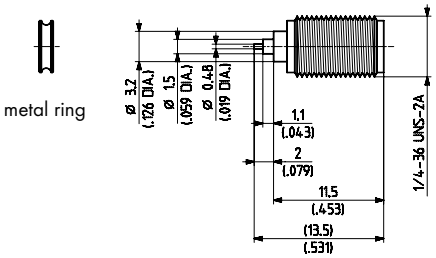

HUBER+SUHNER type	Item no.	Packaging	Plating body	Mounting hole	Notes
22_SMA-50-0-10/111_NE	**22641291**	single	gold	ML 42	pressure max. 200 N/cm^2 *(290 psi)*

For type 12_SMA-50-0-110 (see previous page) and 22_SMA-50-0-10 (see above):
Use assembly tool *74_Z-0-0-75* and torque wrench *74_Z-0-0-80*!
The specified torque of 200 Ncm *(17.7 in. lbs)* results in a leakage rate of 10^{-8} Torr l/sec. *(atm cc/s)* maximum.

Receptacles, jacks (female)

> bulkhead mounted

> with panel seal

> RoHS compliant alternative on request

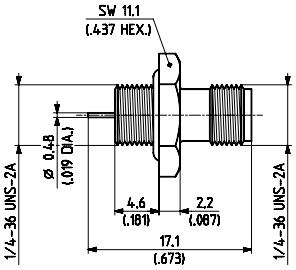

HUBER+SUHNER type	Item no.	Packaging	Plating body	Mounting hole	Notes
22_SMA-50-0-12/111_NY	**22641293**	75 pcs.	gold	ML 98	pressure max. 200 N/cm^2 *(290 psi)* [1]

1) leak rate 10^{-6} Torr l/sec.*(atm cc/s)* max.

tap drill *74_Z-0-0-24*

Receptacles, female, hermetic seal

> bulkhead mounted for direct soldering

> supplied with separate insulating bushing

> RoHS compliant alternative on request

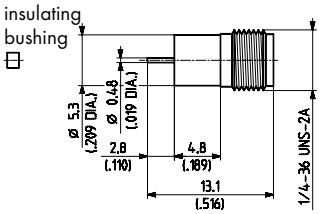

HUBER+SUHNER type	Item no.	Packaging	Plating body	Mounting hole	Notes
22_SMA-50-0-15/111_NE	**22544588**	single	gold	ML 96	pressure max. 200 N/cm^2 *(290 psi)* [1]

1) leak rate 10^{-8} Torr l/sec.*(atm cc/s)* max.

soldering temperature 250 °C / *482 °F* max.

Cable groups see page 28 | Assembly tools see page 385 | Mounting holes see page 412

PCB CONNECTORS

Straight PCB jacks (female)

> without stand-off

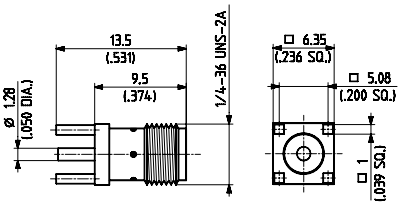

HUBER+SUHNER type	Item no.	Packaging	Plating body	Mounting hole	Notes
82_SMA-50-0-1/111_NH	**22644334**	bulk 100 pcs.	gold	ML 41	

> edge mount

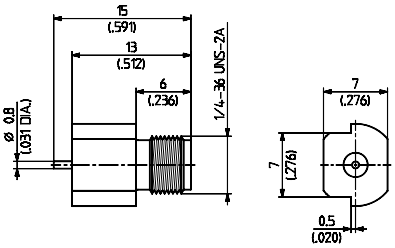

HUBER+SUHNER type	Item no.	Packaging	Plating body	Mounting hole	Notes
82_SMA-50-0-45/111_NE	**22652330**	single	gold	ML 132	

Right angle PCB jacks (female)

> without stand-off

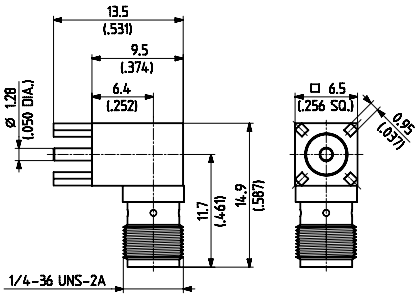

HUBER+SUHNER type	Item no.	Packaging	Plating body	Mounting hole	Notes
85_SMA-50-0-101/111_NH	**22652140**	bulk 100 pcs.	gold	ML 41	

Cable groups see page 28 | Assembly tools see page 385 | Mounting holes see page 412

> with stand-off

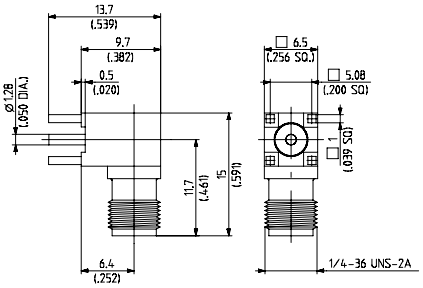

HUBER+SUHNER type	Item no.	Packaging	Plating body	Mounting hole	Notes
85_SMA-50-0-144/111_YH	**23000527**	bulk 100 pcs.	SUCOPLATE®	ML 41	

PROTECTIVE CAPS AND SHORTS

Cap with chain for jacks

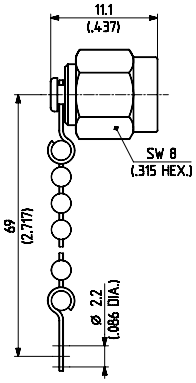

HUBER+SUHNER type	Item no.	Packaging	Plating body	Notes
62_SMA-0-0-1/-11_NE	**22640159**	single	gold	non-shorting, humidity sealed
62_SMA-0-0-51/-99_NE	**22644252**	single	stainless steel	non-shorting, humidity sealed

Shorting Caps

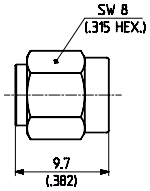

HUBER+SUHNER type	Item no.	Packaging	Plating body	Notes
64_SMA-0-0-1/111_NE	**22640161**	single	gold	SMA plug, humidity sealed

Cable groups see page 28 Assembly tools see page 385 Mounting holes see page 412

SMA LAUNCHERS WITH TRANSITION PINS

SMA launchers have interchangeable transition pins and insulators. This design offers many advantages as:
- connector replacement without disturbing the electronic circuit
- improved mechanical performance
- greater design flexibility (mechanical and electrical)
- reduced inventory costs

The launchers accept transition pins with a diameter of 0.92 mm/.036 *in*. Connectors and pins have to be ordered separately. All parts conform to MIL C-83517. Connector housings are available with recessed or flush rear contact. The PTFE dielectric is always flush with the connector flange back.

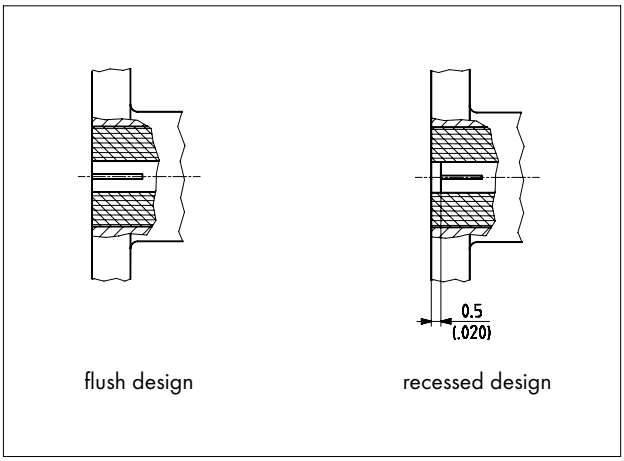

SMA

Tab contact

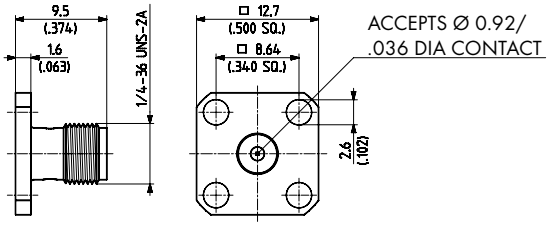

Fig. 1

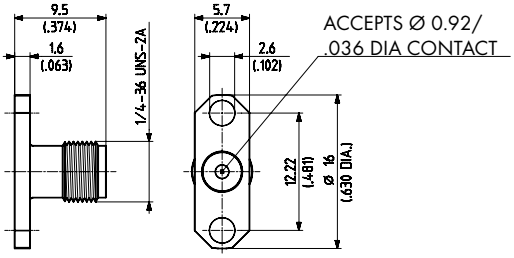

Fig. 2

HUBER+SUHNER type	Item no.	Packaging	Plating body	Fig.	Notes
23_SMA-0-165/199_NE	**22644159**	single	stainless steel	1	flush design
23_SMA-0-166/199_NE	**22644160**	single	stainless steel	2	flush design
23_SMA-0-167/199_NE	**22644155**	single	stainless steel	1	recessed design
23_SMA-0-168/199_NE	**22644156**	single	stainless steel	2	recessed design

Cable groups see page 28 Assembly tools see page 385 Mounting holes see page 412

Transition pins for flush launchers

Tab contact

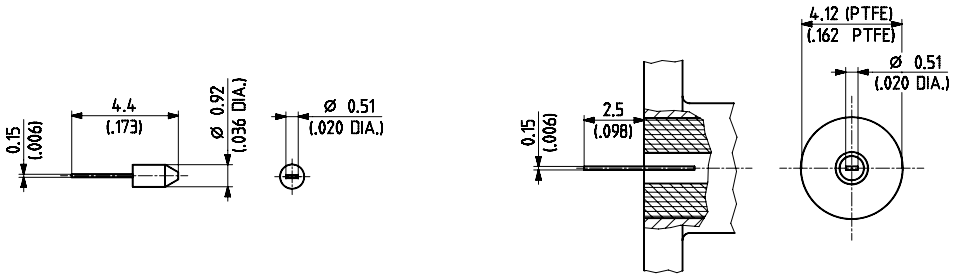

HUBER+SUHNER type	Item no.	Packaging	Plating	Notes
73_Z-0-0-138/1-_UZ	**22644145**	10 pins	gold	

Transition pins for recessed launchers

Pin contact and insulator

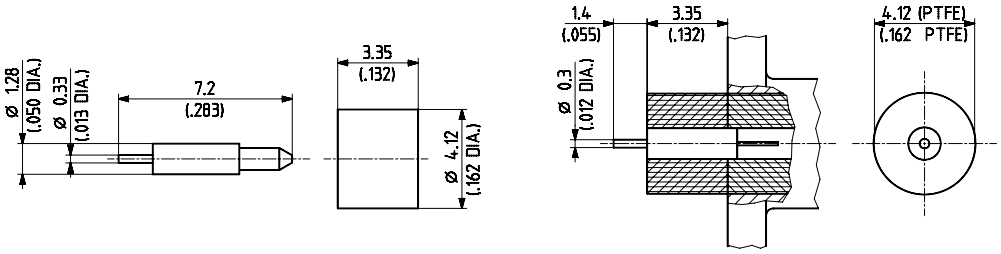

HUBER+SUHNER type	Item no.	Packaging	Plating	Notes
73_Z-0-0-136/1-_UZ	**22644151**	10 pins and insulators	gold	

Pin contact

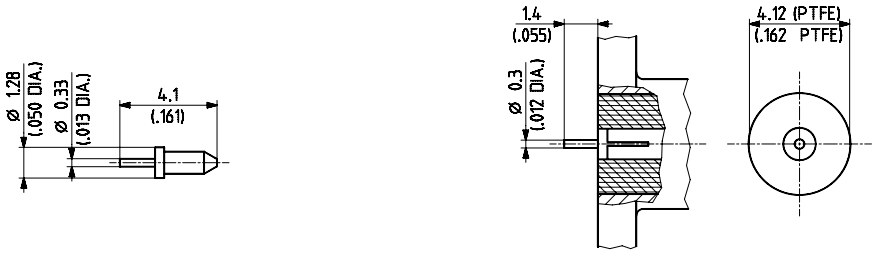

HUBER+SUHNER type	Item no.	Packaging	Plating	Notes
73_Z-0-0-141/1-_UZ	**22644147**	10 pins	gold	

Cable groups see page 28 | Assembly tools see page 385 | Mounting holes see page 412

Tab contact

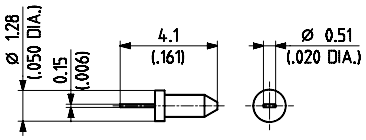

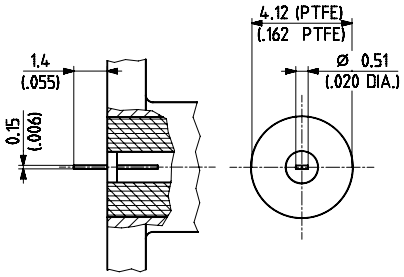

HUBER+SUHNER type	Item no.	Packaging	Plating	Notes
73_Z-0-0-142/1-_UZ	**22644148**	10 pins	gold	

Slotted contact

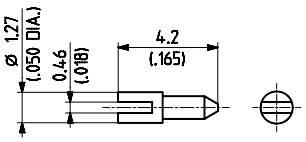

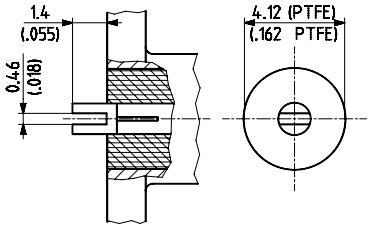

HUBER+SUHNER type	Item no.	Packaging	Plating	Notes
73_Z-0-0-151/1-_UZ	**22644143**	10 pins	gold	

Cable groups see page 28 | Assembly tools see page 385 | Mounting holes see page 412

A FURTHER HUBER+SUHNER PRODUCT!

RF microwave cables and assemblies

Details on our RF cable assemblies are to be found in the general catalogue, Item no. 23012500. Get your copy free of charge at **www.hubersuhner.com.**

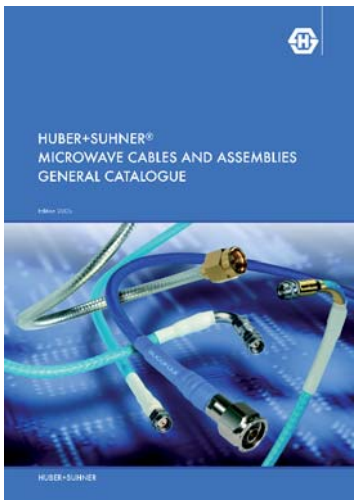

SERIES PC 3.5
PRECISION SUBMINIATURE CONNECTORS

DESCRIPTION

HUBER+SUHNER PC 3.5 connectors are precision connectors for use in microwave applications up to 33 GHz. They are especially suitable for use with semi-rigid cables and microwave components. They are **intermateable with SMA and SK connectors**. Due to an air dielectric interface and the more durable construction a superior repeatability further enhances the performance.

CONTENTS PAGE

INTERFACE DIMENSIONS

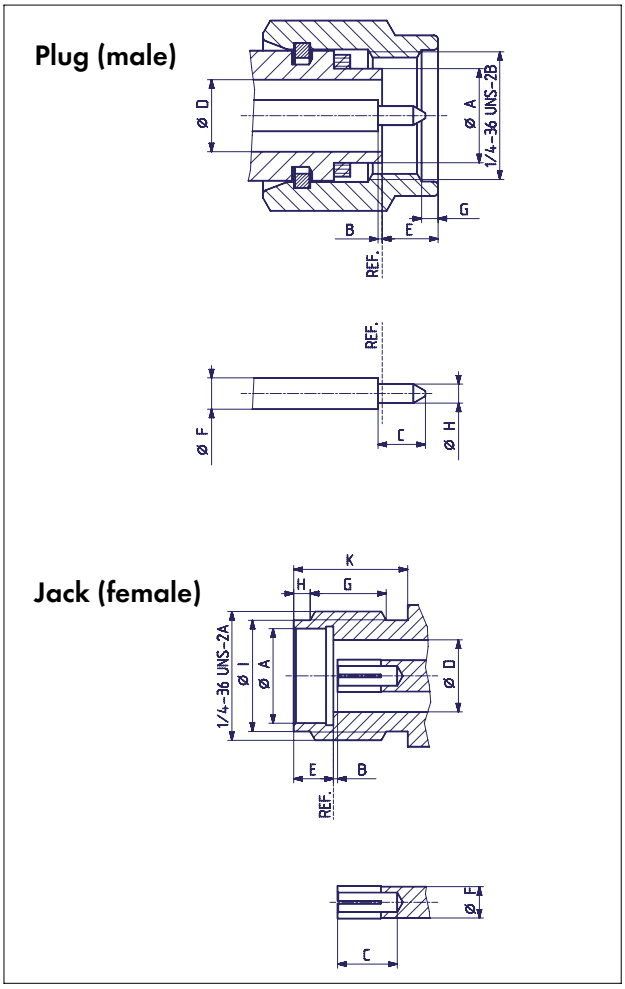

INTERFACE DIMENSIONS (*MM / INCHES*)

	Plug		Jack	
	min.	max.	min.	max.
A	*4.55/.179*	*4.58/.180*	*4.60/.181*	*4.63/.182*
B	*0.00/.000*	*0.08/.003*	*0.00/.000*	*0.08/.003*
C	*2.03/.080*	*2.29/.090*	*2.79/.110*	*3.18/.125*
D	*3.49/.138*	*3.51/.138*	*3.49/.138*	*3.51/.138*
E	*2.36/.093*	*3.56/.135*	*1.88/.074*	*1.98/.078*
F	*1.51/.060*	*1.52/.060*	*1.51/.060*	*1.52/.060*
G	*0.38/.015*	*1.14/.045*	*3.35/.132*	*4.62/.182*
H	*0.92/.036*	*0.93/.037*	*0.38/.015*	*1.14/.045*
I	–	–	*5.30/.209*	*5.40/.213*
K	–	–	*5.54/.218*	–

Interface dimensions conformable to the Standards:

International: **IEC 60169-23**

IP rating (interface, mated) IP68

TECHNICAL DATA

ELECTRICAL DATA	REQUIREMENTS
Impedance	50 Ω
Frequency range	DC ... 33 GHz
Dielectric withstanding voltage (at sea level) - RG 405/U - RG 402/U	 750 V rms, 50 Hz 1000 V rms, 50 Hz
Working voltage (at sea level) - RG 405/U - RG 402/U	 ≤ 250 V rms, 50 Hz ≤ 335 V rms, 50 Hz
Insulation resistance	≥ $5 \cdot 10^3$ MΩ
Contact resistance - centre contact - outer contact	 ≤ 3 mΩ ≤ 2 mΩ
RF-leakage	≥ 100 dB - f (GHz) dB
VSWR (typical values) - RG 405/U - RG 402/U - adaptors	 ≤ 1.13 up to 26.5 GHz ≤ 1.10 up to 26.5 GHz ≤ 1.08 up to 18 GHz / ≤ 1.15 up to 26.5 GHz

MECHANICAL DATA	REQUIREMENTS
Coupling nut torque - recommended - proof torque	 0.80 Nm ... 1.10 Nm / *7.1 in. lbs ... 9.7 in. lbs* 1.70 Nm / *15.0 in. lbs*
Coupling nut retention force	≥ 270 N / *60.7 lbs*
Contact captivation	≥ 27 N /*6.1 lbs*
Cable retention force[1)]	see pages 28 – 34
Durability (matings)	≥ 500

1) Value considers maximum load of the cables without irreversible variations of specifications.

ENVIRONMENTAL DATA	TEST CONDITIONS
Temperature range	– 65°C ... + 90°C / – 85 °F ... + 194 °F
Thermal shock	MIL-STD-202, Method 107, Condition B
Moisture resistance	MIL-STD-202, Method 106
Corrosion	Saltspray test acc. to MIL-STD-202, Method 101, Condition B
Vibration	MIL-STD-202, Method 204, Condition D
Shock	MIL-STD-202, Method 213, Condition I

MATERIAL DATA		
CONNECTOR PART	**MATERIAL**	**PLATING**
Bodies	stainless steel	passivated
Cable entries	brass	gold
Centre contacts	copper-beryllium alloy	gold
Support beads	polystyrene, crosslinked	
Gaskets	silicone rubber	

Some connectors may have a specification that differs from the above mentioned data.

The products are designed and guaranteed to pass the above mentioned test procedures. Any additional or different requirement arising from specific applications or environmental conditions which is not covered by these test procedures is subject to request.

CABLE CONNECTORS

Straight cable plugs (male)

> for semi-rigid cables

> cable entry soldered

> centre contact plugged-in

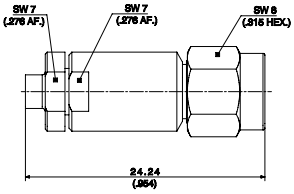

Fig. 1

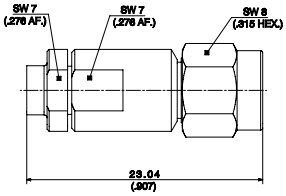

Fig. 2

HUBER+SUHNER type	Item no.	Cable group (example)	Packaging	Assembly instruction	Fig.	Notes
11_PC35-50-2-4/199_UE	**84009440**	Y3, Y11 (EZ 86)	single	0000215467	1	
11_PC35-50-3-4/199_UE	**84009380**	Y5, Y12 (EZ 141)	single	0000215467	2	

Straight cable jacks (female)

> for semi-rigid cables

> cable entry soldered

> centre contact plugged-in

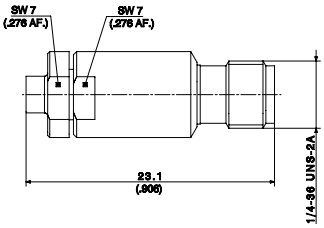

Fig. 1

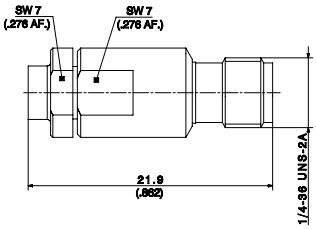

Fig. 2

HUBER+SUHNER type	Item no.	Cable group (example)	Packaging	Assembly instruction	Fig.	Notes
21_PC35-50-2-4/199_UE	**84009419**	Y3, Y11 (EZ 86)	single	0000215467	1	
21_PC35-50-3-3/199_UE	**84009382**	Y5, Y12 (EZ 141)	single	0000215467	2	

Cable groups see page 28 Assembly tools see page 385 Mounting holes see page 412

Straight bulkhead cable jacks (female)

> for semi-rigid cables

> bulkhead mounted

> cable entry soldered

> centre contact plugged-in

> with panel seal

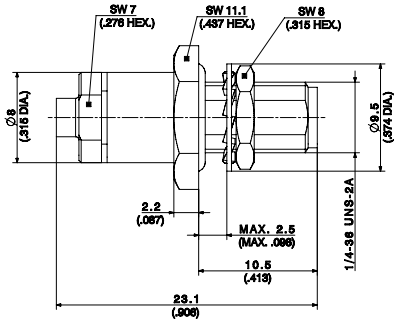

Fig. 1

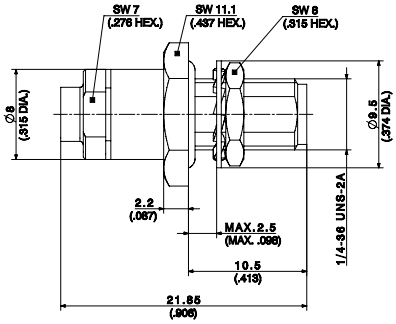

Fig. 2

HUBER+SUHNER type	Item no.	Cable group (example)	Packaging	Assembly instruction	Fig.	Mounting hole
24_PC35-50-2-2/199_UE	**84009405**	Y3, Y11 (EZ 86)	single	0000215467	1	ML 35
24_PC35-50-3-2/199_UE	**84009383**	Y5, Y12 (EZ 141)	single	0000215467	2	ML 35

CONNECTORS WITH INTERCHANGEABLE TRANSITION PINS

Flange mount, jacks (female)

> panel mounted

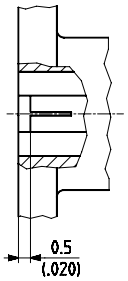

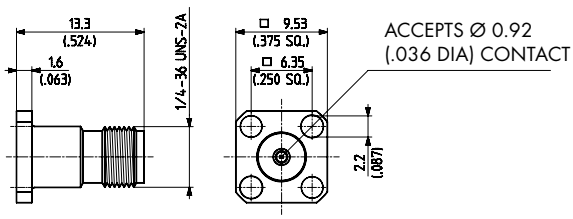

Fig. 1

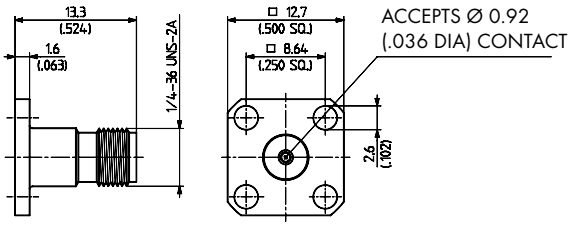

Fig. 2

HUBER+SUHNER type	Item no.	Packaging	Flange type	Fig.	Notes
23_PC35-50-0-51/199_UE	**22644918**	single	square	1	
23_PC35-50-0-53/199_UE	**22644910**	single	square	2	

Cable groups see page 28 Assembly tools see page 385 Mounting holes see page 412

> panel mounted

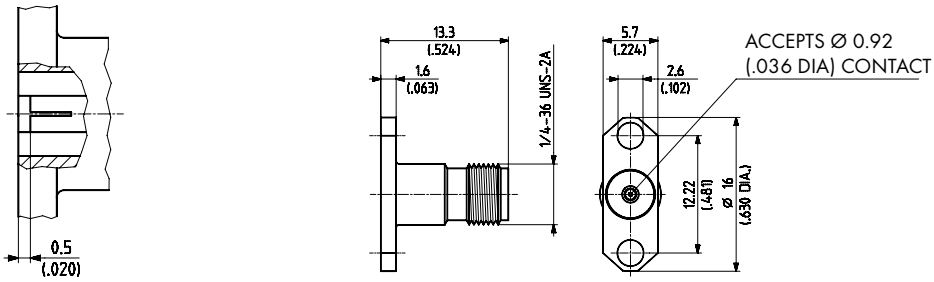

HUBER+SUHNER type	Item no.	Packaging	Flange type	Notes
23_PC35-50-0-54/199_UE	**22644911**	single	2-hole	

Transition Pins

for PC 3.5 connectors with interchangeable contact pins

Pin contact

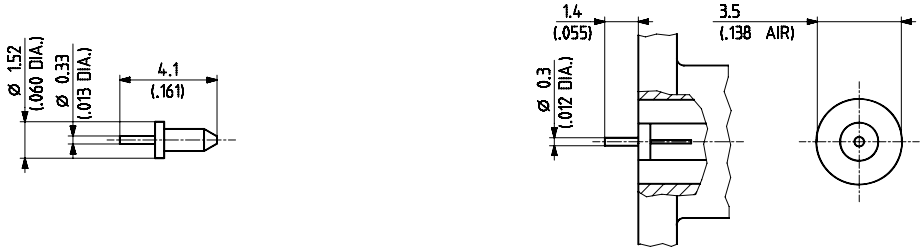

HUBER+SUHNER type	Item no.	Packaging	Plating	Notes
73_Z-0-0-168	**22644927**	10 pins	gold	

Tab contact

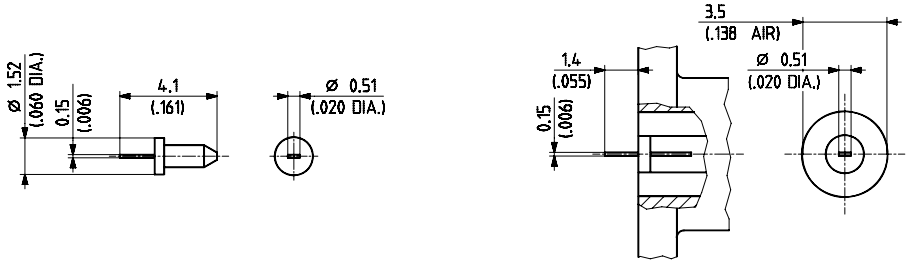

HUBER+SUHNER type	Item no.	Packaging	Plating	Notes
73_Z-0-0-169	**22644931**	10 pins	gold	

Tab contact

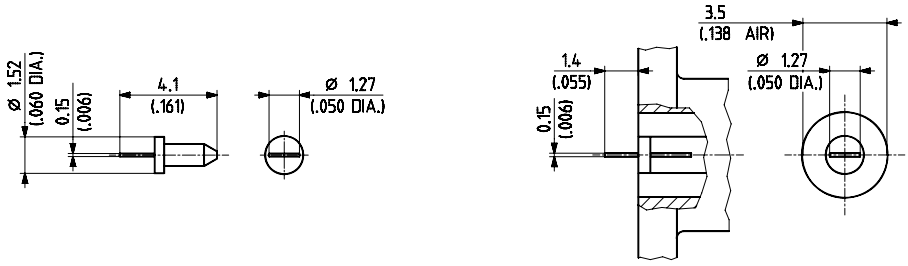

HUBER+SUHNER type	Item no.	Packaging	Plating	Notes
73_Z-0-0-170	**22644932**	10 pins	gold	

Cable groups see page 28 Assembly tools see page 385 Mounting holes see page 412

SERIES SK, PRECISION SUBMINIATURE CONNECTORS

DESCRIPTION

HUBER+SUHNER SK connectors are precision connectors for microwave applications up to 40 GHz.
They are **intermateable with series SMA and PC 3.5**. They have a high mechanical stability and an excellent repeatability. The shortened male pin ensures a non-destructive mating process. The glass beads, when used in conjunction with the SK launchers, enable the connectors to be replaced without disturbing the hermetic seal. For a mechanical decoupling between glass bead and internal microwave circuit, stress relief contacts are available.

CONTENTS PAGE

SK

INTERFACE DIMENSIONS

Plug (male)

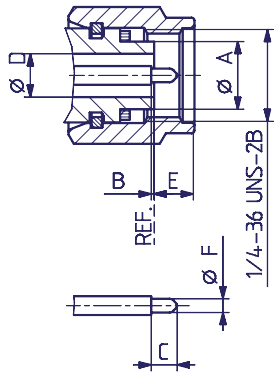

Jack (female)

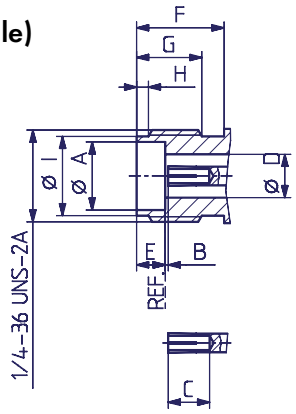

INTERFACE DIMENSIONS (*MM / INCHES*)

	Plug		Jack	
	min.	max.	min.	max.
A	4.53/.178	4.57/.180	4.60/.181	4.64/.183
B	0.00/.000	0.13/.005	0.00/.000	0.13/.005
C	1.55/.061	1.65/.065	2.80/.110	–
D	2.89/.114	2.95/.116	2.89/.114	2.95/.116
E	–	3.28/.129	1.88/.074	1.98/.078
F	0.91/.036	0.94/.037	5.90/.232	–
G	–	–	4.40/.173	–
H	–	–	0.70/.028	0.90/.036
I	–	–	5.30/.208	5.40/.213

IP rating (interface, mated) IP68

TECHNICAL DATA

ELECTRICAL DATA	REQUIREMENTS
Impedance	50 Ω
Frequency range	DC ... 40 GHz
Dielectric withstanding voltage (at sea level)	750 V rms, 50 Hz
Working voltage (at sea level) mated / unmated	≤ 250 V rms, 50 Hz
Insulation resistance	≥ $5 \cdot 10^3$ MΩ
Contact resistance - centre contact - outer contact	 ≤ 3 mΩ ≤ 2 mΩ
VSWR (typical values) - cable connectors (cable assembly with 2 connectors) - launchers	 ≤ 1.37 DC ... 40 GHz ≤ 1.43 DC ... 40 GHz

MECHANICAL DATA	REQUIREMENTS
Coupling nut torque - recommended - proof torque	 1.30 Nm / *11.47 in. lbs* 1.70 Nm / *15.0 in. lbs*
Contact captivation	≥ 22 N / *4.9 lbs*
Durability (matings)	≥ 500

ENVIRONMENTAL DATA	TEST CONDITIONS
Temperature range	*– 55°C ... + 125°C / – 67 °F ... + 257 °F*
Thermal shock	MIL-STD-202, Method 107, Condition B
Vibration	MIL-STD-202, Method 204, Condition D

MATERIAL DATA		
CONNECTOR PART	MATERIAL	PLATING
Bodies, cable connectors	copper-beryllium alloy /stainless steel	gold
Bodies, receptacles	stainless steel / copper alloy	passivated / gold
Centre contacts	copper-beryllium alloy	gold
Support beads	PPO (polyphenylene oxide)	

Some connectors may have a specification that differs from the above mentioned data.

The products are designed and guaranteed to pass the above mentioned test procedures. Any additional or different requirement arising from specific applications or environmental conditions which is not covered by these test procedures is subject to request.

CABLE CONNECTORS

Straight cable plugs (male)

> for semi-rigid cables

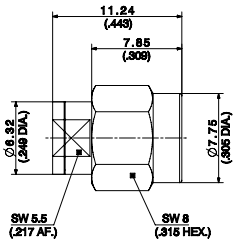

Fig. 1

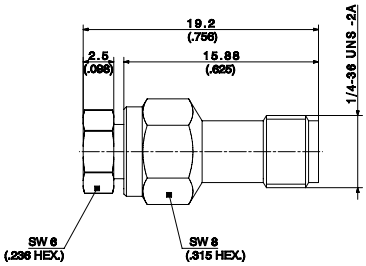

Fig. 2

HUBER+SUHNER type	Item no.	Cable group (example)	Packaging	Assembly instruction	Fig.	Notes
11_SK-50-2-56/119_NE	**84013230**	Y3, Y11 (EZ 86)	single	27445	1	plug
21_SK-50-2-58/199_NE	**84019664**	Y3, Y11 (EZ 86)	single	0000234990	2	jack

SK

Straight bulkhead cable jacks (female)

> for semi-rigid cables

> with panel seal

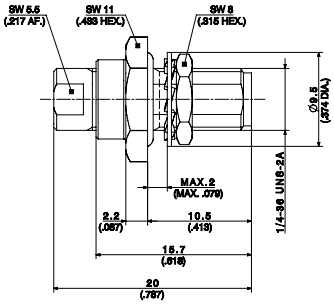

HUBER+SUHNER type	Item no.	Cable group (example)	Packaging	Assembly instruction/ Mounting hole
24_SK-50-2-55/1-_NE	**84016419**	Y10 (EZ 118-TP)	single	0000229976 / ML 35

Cable groups see page 28 Assembly tools see page 385 Mounting holes see page 412

LAUNCHERS

"Sparkplug" Launchers

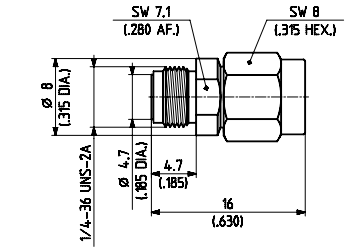

Fig. 1

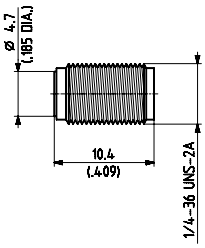

Fig. 2

HUBER+SUHNER type	Item no.	Packaging	Assembly instruction	Mounting hole	Fig.	Notes
12_SK-50-0-51/199_NE	**22645974**	single	9181	ML 75	1	plug
22_SK-50-0-51/199_NE	**22645975**	single	9181	ML 75	2	jack

Panel launchers (male)

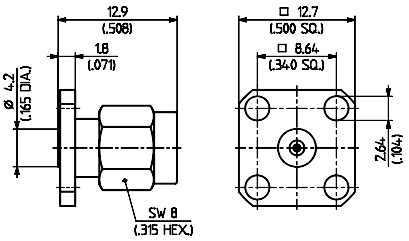

Fig. 1

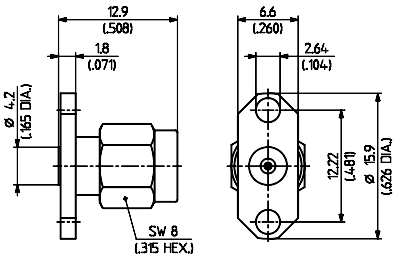

Fig. 2

HUBER+SUHNER type	Item no.	Packaging	Assembly instruction	Mounting hole	Flange type	Fig.	Notes
13_SK-50-0-51/199_NE	**22645978**	single	9182	ML 77	square	1	
13_SK-50-0-52/199_NE	**22645976**	single	9182	ML 78	2-hole	2	

Panel launchers (female)

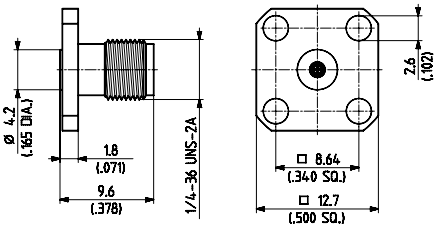

Fig. 1

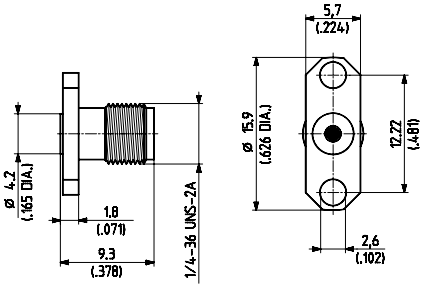

Fig. 2

HUBER+SUHNER type	Item no.	Packaging	Assembly instruction	Mounting hole	Flange type	Fig.	Notes
23_SK-50-0-51/199_NE	**22645979**	single	9182	ML 77	square	1	
23_SK-50-0-52/199_NE	**22645977**	single	9182	ML 78	2-hole	2	

Cable groups see page 28 Assembly tools see page 385 Mounting holes see page 412

ACCESSORIES

Glass bead for 12 SK, 13 SK, 22 SK, 23 SK launchers (package with 1 piece)

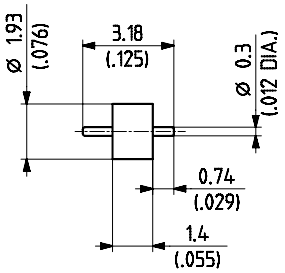

HUBER+SUHNER® TYPE
73_Z-0-0-203/11-_NE
Item no. 22645983

Microstrip stress relief contacts (package with 100 pieces)

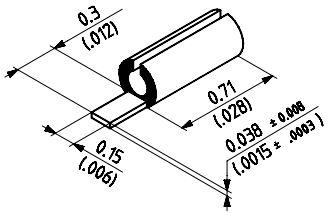

HUBER+SUHNER® TYPE
73_Z-0-0-204/1-_NH
Item no. 22645980

SK

Cable groups see page 28 | Assembly tools see page 385 | Mounting holes see page 412

A FURTHER HUBER+SUHNER PRODUCT GROUP!

RF test and measurement components

Details on this product range are to be found in the Test and Measurement general catalogue, Item no. 23012791. Get your copy free of charge at **www.hubersuhner.com.**

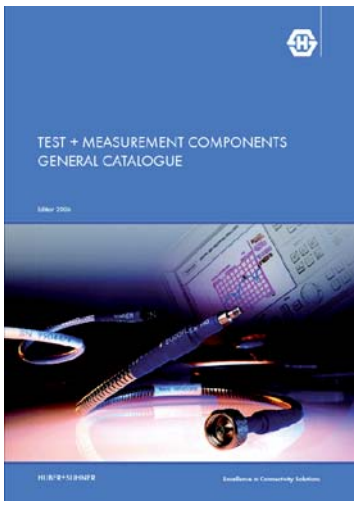

SERIES 1.0/2.3, INSERTS ACCORDING TO DIN 41626/2

DESCRIPTION

HUBER+SUHNER Coaxial "Inserts" 1.0/2.3 are suitable for the insertion of mixed layout connectors DIN 41612 (pattern M). These inserts feature a slide-on coupling mechanism, which ensures a short connect-disconnect time. Impedance accuracy, fast and easy assembly as well as high reproducibility due to the full crimp cable entry are typical characteristics of these H+S connectors. The 1.0/2.3 inserts are suitable for applications up to 4 GHz.

CONTENTS PAGE

INTERFACE DIMENSIONS

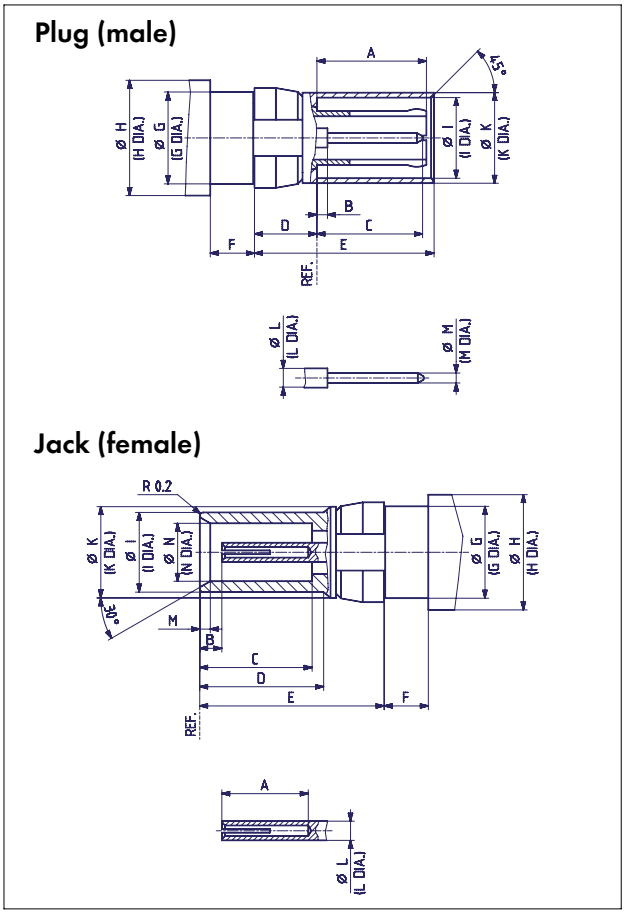

INTERFACE DIMENSIONS (*MM / INCHES*)

	Plug		Jack	
	min.	max.	min.	max.
A	5.40/.213	5.70/.224	4.50/.177	–
B	–	1.15/.045	1.15/.045	1.45/.057
C	5.20/.205	5.50/.217	5.80/.228	5.90/.232
D	3.05/.120	3.20/.126	6.40/.252	6.50/.256
E	9.25/.364	9.35/.368	9.50/.374	9.60/.378
F	2.22/.087	2.40/.094	2.22/.087	2.40/.094
G	4.76/.187	4.79/.189	4.76/.187	4.79/.189
H	–	6.00/.236	–	6.00/.236
I	4.20/.165	4.28/.169	4.03/.159	4.15/.163
K	4.66/.183	4.78/.188	4.72/.186	4.75/.187
L	1.00/.039 nom.		1.00/.039 nom.	
M	0.48/.019	0.52/.020	0.50/.020	0.60/.024
N	–	–	3.00/.118	3.06/.120

Interface dimensions conformable to the Standards:

Germany: DIN 41626/2

IP rating (interface, mated) IP50

TECHNICAL DATA

ELECTRICAL DATA	REQUIREMENTS
Impedance	50 Ω
Frequency range	DC ... 4 GHz
Dielectric withstanding voltage (at sea level)	750 V rms, 50 Hz (depending on cable)
Working voltage (at sea level)	250 V rms, 50 Hz (depending on cable)
Insulation resistance	≥ 200 MΩ
Contact resistance - centre contact - outer contact	 ≤ 10 mΩ ≤ 3 mΩ

MECHANICAL DATA	REQUIREMENTS
Engagement force	≤ 10 N / 2.3 *lbs*
Disengagement force	≤ 10 N / 2.3 *lbs*
Contact captivation	≥ 10 N
Cable retention force[1)]	see pages 28 – 34
Durability (matings)	≥ 500

1) Value considers maximum load of the cables without irreversible variations of specifications.

ENVIRONMENTAL DATA	TEST CONDITIONS
Temperature range	– 55°C ... + 125°C / – 67 °F ... + 257 °F
Climatic category	IEC → 50/125/56
Moisture resistance	MIL-STD-202, Method 106
Corrosion	Saltspray test acc. to MIL-STD-202, Method 101, Condition B
Vibration	MIL-STD-202, Method 204, Condition A

MATERIAL DATA		
CONNECTOR PARTS	**MATERIAL**	**PLATING**
Bodies	brass	SUCOPLATE® / gold
Outer contacts	copper-beryllium alloy, brass	gold / SUCOPRO
Pin contacts	brass	gold / SUCOPRO
Socket contacts	copper-beryllium alloy	gold / SUCOPRO
Crimp ferrules	copper	SUCOPLATE® / gold
Insulators	PTFE or PFA	

Some connectors may have a specification that differs from the above mentioned data.

The products are designed and guaranteed to pass the above mentioned test procedures. Any additional or different requirement arising from specific applications or environmental conditions which is not covered by these test procedures is subject to request.

Typical application

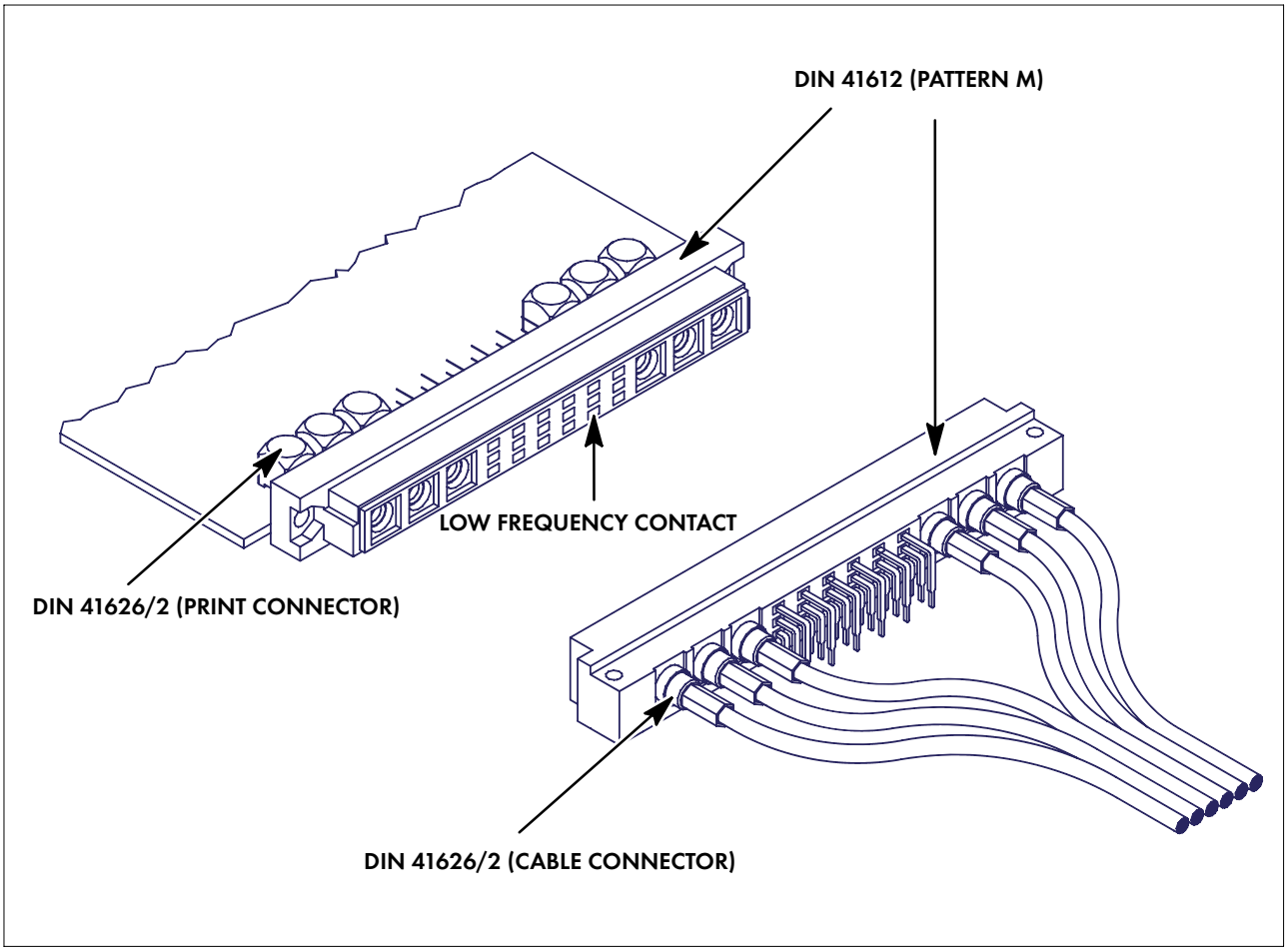

CABLE CONNECTORS

Straight cable plugs (male)

> HUBER+SUHNER® full crimp
> removal tool see page 392

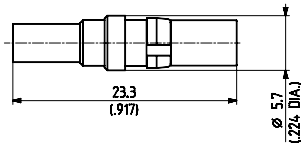

HUBER+SUHNER type	Item no.	Cable group (example)	Packaging	Assembly instruction	Crimp insert
11_1023-C50-2-2/111_NE	**22648559**	U4 (K 02252 D)	single	9191	1 A
11_1023-C50-2-2/111_NH	**22649631**	U4 (K 02252 D)	bulk 100 pcs.	9191	1 A
11_1023-C50-2-3/111_NE	**22648780**	U2 (RG 316/U)	single	9191	1 A
11_1023-C50-2-3/111_NH	**22649007**	U2 (RG 316/U)	bulk 100 pcs.	9191	1 A

Straight cable jacks (female)

> HUBER+SUHNER® full crimp
> removal tool see page 392

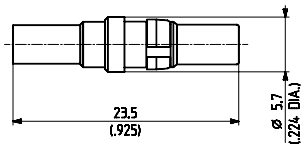

HUBER+SUHNER type	Item no.	Cable group (example)	Packaging	Assembly instruction	Crimp insert
21_1023-C50-2-2/111_NE	**22648560**	U4 (K 02252 D)	single	9191	1 A
21_1023-C50-2-3/111_NE	**22648790**	U2 (RG 316/U)	single	9191	1 A

PCB CONNECTORS

Right angle PCB jacks (female)

> removal tool see page 392

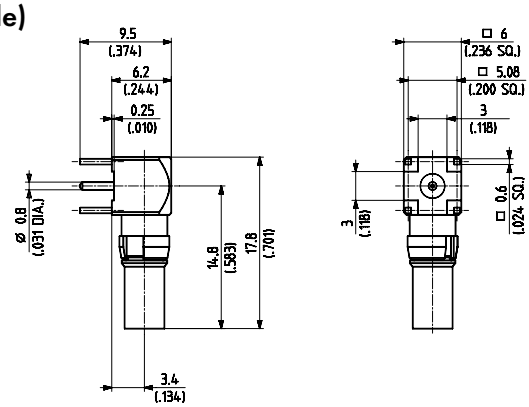

HUBER+SUHNER type	Item no.	Packaging	Mounting hole	Notes
85_1023-C50-0-1/111_NE	**22648561**	single	ML 15	

Cable groups see page 28 Assembly tools see page 385 Mounting holes see page 412

SERIES QLA 00, SUBMINIATURE COAXIAL CONNECTORS

DESCRIPTION

The QLA 00 series contains connectors with a quick latch coupling mechanism: connection is achieved by simply pushing the plug into the jack. 3 latching springs automatically engage, thereby securing the mated connectors against axial and rotational forces. No twisting action is required. The connectors are easily released by slightly pulling back the outer sleeve of the plug. This coupling mechanism provides a fast and reliable connection for applications up to 1.4 GHz.

Compatibility

All connectors of the series QLA 00 are without any restrictions intermateable with Lemo series 00.250.

CONTENTS PAGE

INTERFACE DIMENSIONS

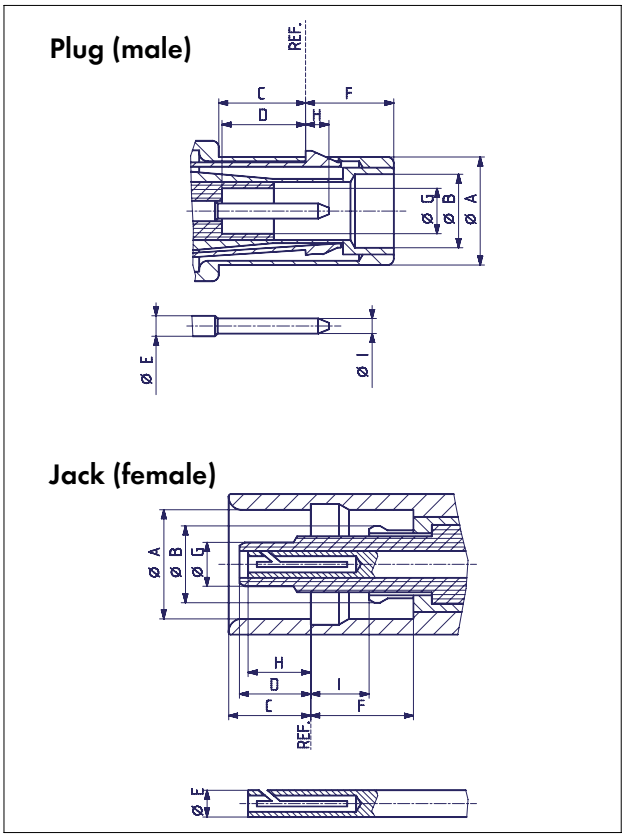

INTERFACE DIMENSIONS (MM / *INCHES*)

	Plug		Jack	
	min.	max.	min.	max.
A	4.96/.195	5.03/.198	5.05/.199	5.11/.201
B	3.38/.133	3.44/.135	3.50/.138*	3.55/.140*
C	3.93/.155	4.08/.161	3.73/.147	3.86/.152
D	3.55/.140	–	–	3.48/.137
E	0.95/.037 nom.		1.24/.049 nom.	
F	4.00/.157	4.16/.164	4.23/.167	4.88/.192
G	2.10/0.83	2.16/.085	1.95/.077	2.03/.080
H	–	1.32/.052	–	3.30/.130
I	0.69/.027	0.72/.028	2.35/.093	2.90/.114

* prior to slotting

Interface dimensions conformable to the Standards:

NIM-CAMAC-Standard CD/N549

IP rating (interface, mated) IP50

QLA

TECHNICAL DATA

ELECTRICAL DATA	REQUIREMENTS
Impedance	50 Ω
Frequency range	DC ... 1.4 GHz
Dielectric withstanding voltage (at sea level)	1.5 kV, 50 Hz
Working voltage (at sea level) - unmated - mated	 ≤ 300 V rms, 50 Hz ≤ 500 V rms, 50 Hz
Insulation resistance	≥ 10^6 MΩ
Contact resistance - centre contact - outer contact	 ≤ 4 mΩ ≤ 2 mΩ
VSWR (typical value for mated connector pair) 11 QLA - 21 QLA	DC ... 300 MHz = 1.15 300 MHz - 1.4 GHz = 1.20
RF-leakage (measured at 500 MHz)	≥ 80 dB

MECHANICAL DATA	REQUIREMENTS
Engagement force	typ. 2 N / *.45 lbs*
Disengagement force	typ. 5 N / *1.1 lbs*
Contact captivation	≥ 20 N / *4.5 lbs*
Cable retention force[1)]	see pages 28 – 34
Durability (matings)	≥ 10 000

1) Value considers maximum load of the cables without irreversible variations of specifications.

ENVIRONMENTAL DATA	TEST CONDITIONS
Temperature range	*– 55°C ... + 150°C / – 67 °F ... + 302 °F*
Thermal shock	MIL-STD-202, Method 107, Condition B
Moisture resistance	MIL-STD-202, Method 106
Corrosion	Saltspray test acc. to MIL-STD-202, Method 101, Condition B
Vibration	MIL-STD-202, Method 204, Condition D
Shock	MIL-STD-202, Method 213, Condition I

MATERIAL DATA		
CONNECTOR PARTS	**MATERIAL**	**PLATING**
Bodies	brass, annealed	nickel
Pin contacts	brass, annealed	gold
Socket contacts	copper-beryllium alloy	gold
Crimp ferrules	copper	SUCOPLATE®
Insulators	PTFE or PFA	

Some connectors may have a specification that differs from the above mentioned data.

The products are designed and guaranteed to pass the above mentioned test procedures. Any additional or different requirement arising from specific applications or environmental conditions which is not covered by these test procedures is subject to request.

CABLE CONNECTORS

Straight cable plugs (male)

> for flexible cables

> cable entry clamp

> centre contact soldered

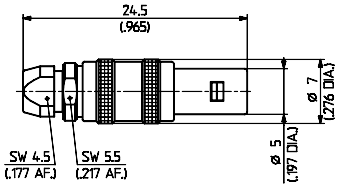

HUBER+SUHNER type	Item no.	Cable group (example)	Packaging	Assembly instruction	Notes
11_QLA-01-2-11/122_NE	**22544536**	U2 (EF 316)	single	9008	

> for flexible cables

> HUBER+SUHNER® full crimp

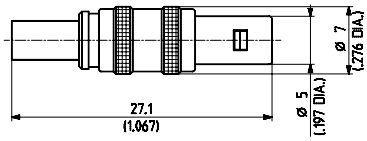

HUBER+SUHNER type	Item no.	Cable group (example)	Packaging	Assembly instruction	Crimp insert
11_QLA-01-1-8/122_NE	**22641146**	U1 (EF 178)	single	9007	1 A
11_QLA-01-2-8/122_NE	**22544043**	U2 (EF 316)	single	9007	1 A
11_QLA-01-2-8/122_NH	**22544042**	U2 (EF 316)	bulk 100 pcs.	9007	1 A
11_QLA-01-2-9/122_NH	**22648228**	U4 (EF 316 D)	bulk 100 pcs.	9007	1 A
11_QLA-01-2-13/122_NH	**22644547**	U3 (G 01130 HT)	bulk 100 pcs.	27020	1 A

> for flexible cables

> HUBER+SUHNER® full crimp

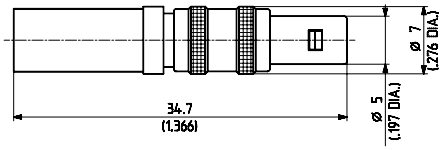

HUBER+SUHNER type	Item no.	Cable group (example)	Packaging	Assembly instruction	Crimp insert
11_QLA-01-3-1/122_NE	**22641313**	U7 (RG 58 C/U)	single	3015	2 B
11_QLA-01-3-2/122_NE	**22643326**	U9 (RG 223/U)	single	3015	2 B

Cable groups see page 28 Assembly tools see page 385 Mounting holes see page 412

Right angle cable plugs (male)

> for flexible cables

> cable entry crimp

> centre contact soldered

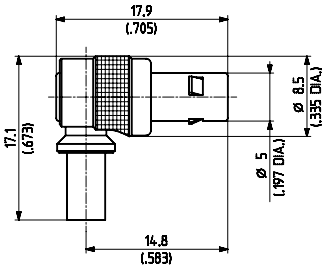

HUBER+SUHNER type	Item no.	Cable group (example)	Packaging	Assembly instruction	Crimp insert
16_QLA-01-1-1/122_NE	**22640011**	U1 (EF 178)	single	3091	A
16_QLA-01-2-1/122_NE	**22640013**	U2 (EF 316)	single	3091	A
16_QLA-01-2-13/122_NE	**22544279**	U3 (G 01130 HT)	single	3091	A
16_QLA-01-2-4/122_NE	**22640015**	U4 (EF 316 D)	single	3091	A
16_QLA-01-2-4/122_NH	**22646619**	U4 (EF 316 D)	bulk 100 pcs.	3091	A

QLA

Straight cable jacks (female)

> for flexible cables

> cable entry crimp

> centre contact soldered

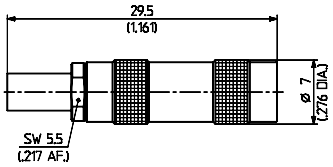

HUBER+SUHNER type	Item no.	Cable group (example)	Packaging	Assembly instruction	Crimp insert
21_QLA-01-2-1/112_NE	**22640019**	U2 (EF 316)	single	3089	A
21_QLA-01-2-1/112_NH	**22651746**	U2 (EF 316)	bulk 100 pcs.	3089	A

> for flexible cables

> HUBER+SUHNER® full crimp

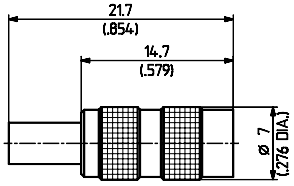

HUBER+SUHNER type	Item no.	Cable group (example)	Packaging	Assembly instruction	Crimp insert
21_QLA-01-2-5/112_NH	**22652371**	U2 (EF 316)	bulk 100 pcs.	27158	1 A

Cable groups see page 28 Assembly tools see page 385 Mounting holes see page 412

Straight bulkhead cable jacks (female)

> for semi-rigid cables

> cable entry soldered

> centre contact plugged-in

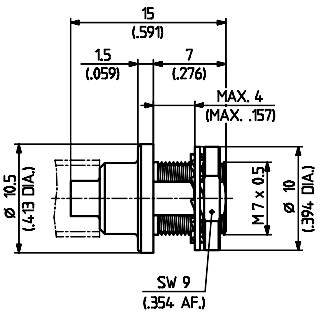

HUBER+SUHNER type	Item no.	Cable group (example)	Packaging	Assembly instruction/ Mounting hole
24_QLA-01-2-5/112_NH	**23002772**	Y11,Y3 (Sucoform 86)	bulk 100 pcs.	27362 / ML 20

> for flexible cables

> cable entry clamp

> centre contact soldered

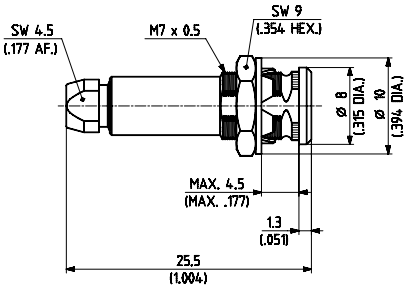

HUBER+SUHNER type	Item no.	Cable group (example)	Packaging	Assembly Instruction/ Mounting Hole	Notes
24_QLA-01-1-11/112_NE	**22642297**	U1 (EF 178)	single	9008/ML 99	max. cable diameter 2.10 mm/.093 *in.*
24_QLA-01-2-11/112_NE	**22544535**	U2 (EF 316)	single	9008/ML 99	max. cable diameter 2.90 mm/.114 *in.*

> for flexible cables

> cable entry clamp

> centre contact soldered

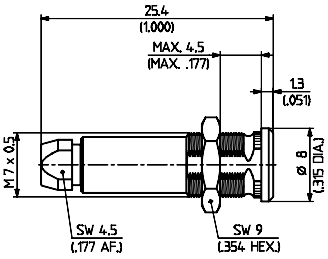

HUBER+SUHNER type	Item no.	Cable group (example)	Packaging	Assembly Instruction/ Mounting Hole	Notes
24_QLA-01-1-12/112_NH	**22659147**	U1 (RG 178 B/U)	bulk 100 pcs.	9008/ML 23	max. cable diameter 2.10 mm/.093 *in.*

Cable groups see page 28 Assembly tools see page 385 Mounting holes see page 412

> for flexible cables

> cable entry crimp

> centre contact soldered

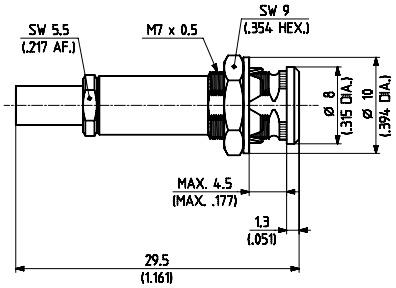

HUBER+SUHNER type	Item no.	Cable group (example)	Packaging	Assembly Instruction/ Mounting Hole	Crimp insert
24_QLA-01-2-1/112_NE	**22640026**	U2 (RG 316/U)	single	3089/ML 99	A

RECEPTACLES WITH SOLDER END

QLA

Receptacles, jacks (female)

> bulkhead mounted

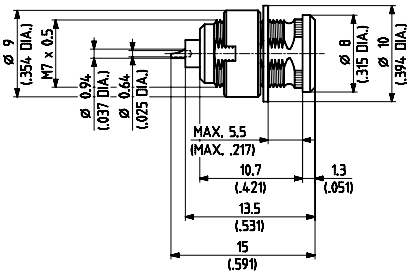

Fig. 1

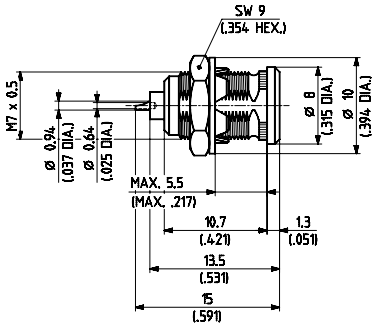

Fig. 2

HUBER+SUHNER type	Item no.	Packaging	Mounting hole	Fig.	Crimp insert
22_QLA-01-0-1/112_NE	**22640023**	single	ML 23	1	assembly tool 74_Z-0-0-25 required
22_QLA-01-0-1/112_NH	**22646308**	bulk 100 pcs.	ML 23	1	assembly tool 74_Z-0-0-25 required
22_QLA-01-0-2/112_NE	**22640024**	single	ML 99	2	counter sunk from rear

Cable groups see page 28 Assembly tools see page 385 Mounting holes see page 412

PCB CONNECTORS

Straight PCB jacks (female)

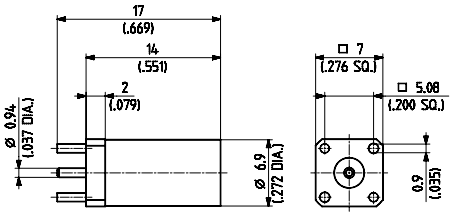

HUBER+SUHNER type	Item no.	Packaging	Mounting hole	Notes
82_QLA-01-0-2/112_NE	**22543414**	single	ML 97	without stand-off

Right angle PCB jacks (female)

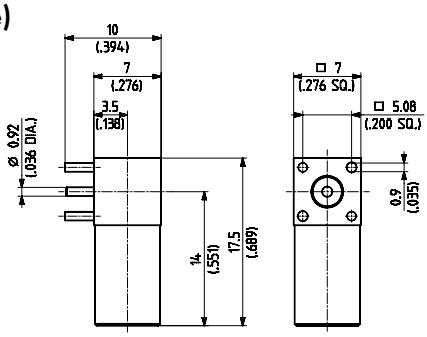

HUBER+SUHNER type	Item no.	Packaging	Mounting hole	Notes
85_QLA-01-0-2/112_NE	**22640039**	single	ML 97	without stand-off
85_QLA-01-0-2/110_NH	**22646483**	bulk 100 pcs.	ML 97	without stand-off
85_QLA-01-0-2/122_NE	**22651770**	single	ML 97	without stand-off

SHORTING PLUGS

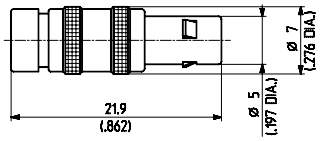

HUBER+SUHNER type	Item no.	Packaging	Notes
64_QLA-01-0-1/122_NE	**22640035**	single	

Cable groups see page 28 Assembly tools see page 385 Mounting holes see page 412

SERIES BMA, SUBMINIATURE BLIND MATE CONNECTORS

DESCRIPTION

HUBER+SUHNER BMA blind mate connectors open up special dimensions in microwave applications up to 18 GHz. HUBER+SUHNER offers a range of connectors for fixed as well as "floating" configurations with any axial or radial misalignment taken out by the outer contact of the jacks.
The BMA series presents an outstanding range of products featuring high reliability and ease of assembly.

CONTENTS PAGE

INTERFACE DIMENSIONS

Plug (male)

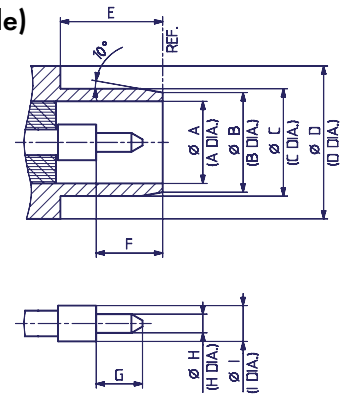

Jack (female)

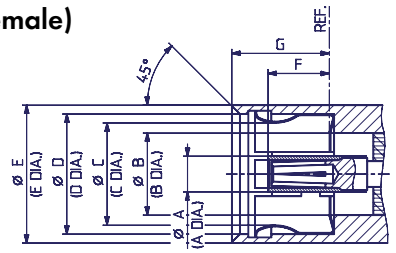

INTERFACE DIMENSIONS (MM / *INCHES*)

	Plug		Jack	
	min.	max.	min.	max.
A	4.09 / .161 nom		1.78 / .070 nom.	
B	4.88 / .192 nom.		4.09 / .161 nom.	
C	5.31/.209	5.35/.211	—	5.08/.200
D	7.62 / .300 nom.		5.71/.225	—
E	5.03/.198	—	7.37/.290	—
F	3.25/.128	—	3.05/.120	3.23/.127
G	2.29 / .090 nom.		—	5.03/.198
H	0.90/.035	0.94/.037		
I	1.78 / .070 nom.			

Interface dimensions conformable to the Standards:

USA: MIL-STD-348A/321

COMPATIBILITY

The HUBER+SUHNER range of BMA connectors is fully compatible with the OSP connector series.

IP rating (interface, mated) IP60

BMA

TECHNICAL DATA

ELECTRICAL DATA	REQUIREMENTS	
Cable type	.086" Semi-Rigid	.141" Semi-Rigid
Impedance	50 Ω	
Frequency range	DC ... 18 GHz	
Dielectric withstanding voltage (at sea level)	1.5 kV rms, 50 Hz	1.0 kV rms, 50 Hz
Insulation resistance	$\geq 5 \cdot 10^3$ MΩ	
Contact resistance - centre contact - outer contact	 ≤ 2 mΩ ≤ 2 mΩ	
VSWR (typical values) - DC ... 18 GHz	(mated connector pair) ≤ 1.02 + 0.005 f (GHz)	(mated connector pair) ≤ 1.05 + 0.005 f (GHz)
RF-leakage interface only (fully mated)	≥ 90 dB - f (GHz)[1]	
RF-testing voltage (at sea level)	1.0 kV rms, 5 MHz	670 V rms, 5 MHz
Admissible power (at sea level and room temperature)	≤ 300 W at 3 GHz	

1) measured at interface with reference planes being in true alignment

MECHANICAL DATA	REQUIREMENTS
Engagement force	≤ 13.5 N
Disengagement force	≥ 2 N
Contact captivation	≥ 27 N / 6.1 lbs
Cable retention force[1)]	see pages 28 – 34
Durability (matings)	≥ 1000

1) Value considers maximum load of the cables without irreversible variations of specifications.

ENVIRONMENTAL DATA	TEST CONDITIONS
Temperature range	– 65°C ... + 125°C / – 85 °F ... + 257 °F
Thermal shock	MIL-STD-202, Method 107, Condition B
Moisture resistance	MIL-STD-202, Method 106
Corrosion	Saltspray test acc. to MIL-STD-202, Method 101, Condition B
Vibration	MIL-STD-202, Method 204, Condition D
Shock	MIL-STD-202, Method 213, Condition I

MATERIAL DATA		
CONNECTOR PARTS	**MATERIAL**	**PLATING**
Bodies	copper-beryllium alloy stainless steel	gold
Pin contacts	copper-beryllium alloy	gold
Spring basket	copper-beryllium alloy	gold
Springs (floating connectors)	stainless steel	
Insulators	PTFE or PFA	
Gaskets	EPDM, 40 shore A	

Some connectors may have a specification that differs from the above mentioned data.

The products are designed and guaranteed to pass the above mentioned test procedures. Any additional or different requirement arising from specific applications or environmental conditions which is not covered by these test procedures is subject to request.

BMA CONNECTOR APPLICATIONS

Quick and reliable engagement and disengagement of multiple microwave transmission lines, high packaging density of flexible and rigid coaxial lines and cable free connection of modules to motherboard are some needs of modern microwave systems.
HUBER+SUHNER BMA connectors offer an economical solution for the most demanding interconnector applications found today in civil and military microwave circuits. To help ensure a problem free, reliable long term operation the following guidelines should be used.

Assembly hints
Radial and axial misalignments can be accomodated with the spring outer contacts of the HUBER+SUHNER BMA connector.
These misalignments are due to the build up of tolerances with the major contributions coming from: Axial direction, mounting plate distances and plate distortions. Radial direction: mounting hole positions and concentricity, plate distortion and misalignment.
For recommended mounting hole sizes see page 412.

Rigid mounting

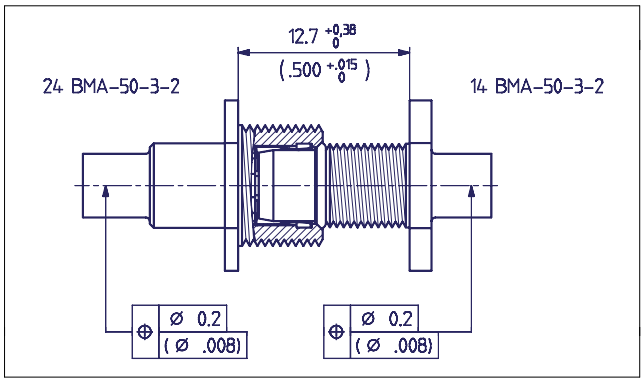

Maximum misalignment

Axial: 0.38 mm / *.015 in.* *
Radial: 0.20 mm / *.008 in.*

* For applications with reduced return loss specifications 0.76 mm / *.030 in.* is allowable.

Hole dimensions

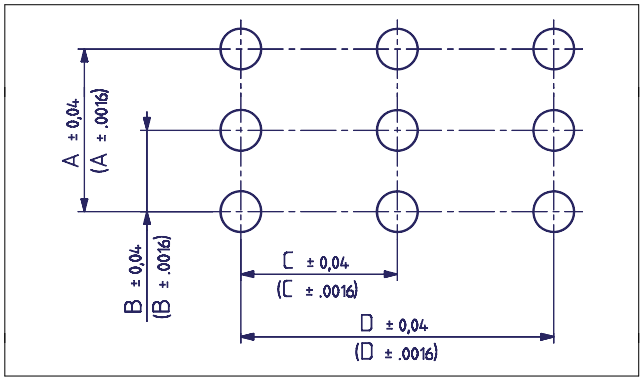

To avoid tolerances build up all mounting holes must be toleranced from a single datum point.

It is also important that both of the mounting plates are properly afficed and correctly positioned.

Float mounting

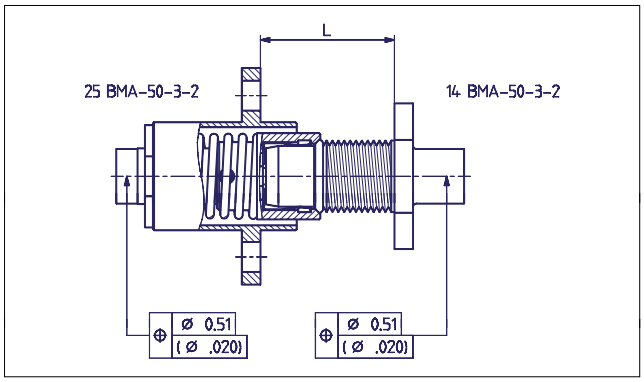

The increased tolerance correction of the connector is achieved by using an extra spring system.

This allows the centre assembly of the connector to move freely within the flange body.

Recommended maximum tolerances:

Axial: 1.52 mm / *.060 in.*
Radial: 0.51 mm / *.020 in.*

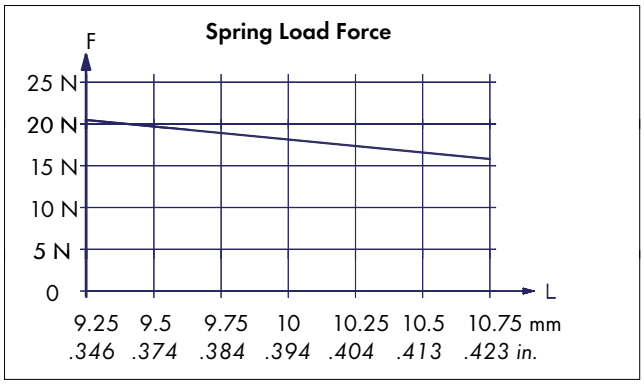

The adjacent diagram shows the relationship between the connector preloading force and the separation distance "L" between the mounting reference planes for a typical connector pair (25_BMA-50-3-2 and 14_BMA-50-3-2).

To ensure optimum contact under extreme radial misalignment the following points must be considered:

A:

The maximum misalignment tolerances must not be exceeded. Any possible bending of the mounting plate due to the spring preloading of the individual connectors must be taken into account.
If distortion occurs the following steps should be taken to minimize the effect:
- re-dimensioning
- bracing of the mounting plate
- reduction of maximum connector preloading force which will result in the limitation of length L.

B:

A minimum preloading force of 16 N must be ensured for each connector pair so that the maximum engaging force will be exceeded. This represents the upper limit of separation. For the example above this is a length L of maximum 10.65 mm / *.419 in.*
Data on other connector combinations available on request.
For the dimensioning of the holes the same points must be considered as for the rigid mounting.

Mounting plate bending

For an array of BMA connectors to be mounted on a chassis, the forces on the connectors must be taken into account and in the case of a floating assembly the preloading forces must be considered.

For a simplified calculation the mounting plate can be considered as a beam under deflection, thus the bending is:

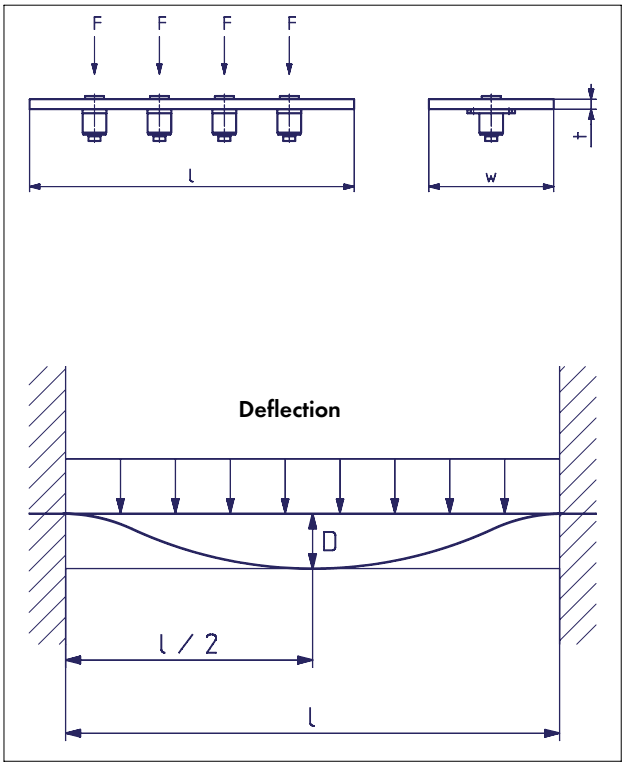

Legend:

D	*deflection* = $\frac{n \cdot F \cdot l^3}{384 E \cdot I}$
E	*modulus of elasticity*
	aluminium: E = 70'000 N/mm²
	steel: E = 210'000 N/mm
F	*preloading force*
I	*moment of beam* = $\frac{w \cdot t^3}{12}$
l	*lenth of panel*
n	*number of connectors*
t	*thickness of panel*
w	*width of panel*

Example:

4 connectors of type 25_BMA-50-3-2 (preloading force F = 20 N each):
E = 70'000 N/mm^2 (aluminium chassis)
thickness of panel (t) 2 mm
width of panel (W) 20 mm
length of panel (l) 80 mm

$$I = \frac{20mm \cdot (2mm)^3}{12} = 13.33mm^4$$

$$D = \frac{4 \cdot 20N \cdot (80mm)^3}{384 \cdot 70'000 \frac{N}{mm^2} \cdot 13.33mm^4} = 0.11mm$$

CABLE CONNECTORS

Straight bulkhead cable plugs (male)

> for semi-rigid cables

> cable entry soldered

> bulkhead mounted, rigid

> body material: CuBe, gold plated

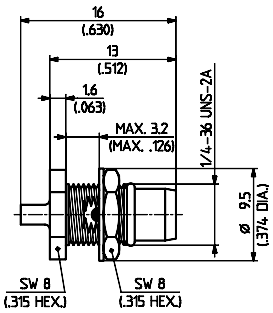

Fig. 1

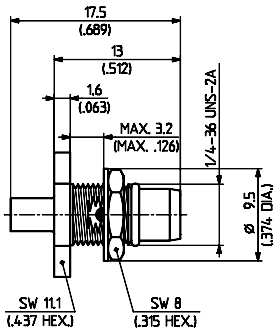

Fig. 2

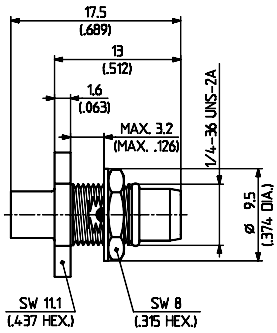

Fig. 3

HUBER+SUHNER type	Item no.	Cable group (example)	Packaging	Assembly instruction	Mounting hole	Fig.
14_BMA-50-1-15/111_NE	**22646663**	Y2 (EZ 47)	single	27180	ML 56	1
14_BMA-50-2-2/111_NE	**22645600**	Y3, Y11 (EZ 86)	single	9171	ML 56	2
14_BMA-50-3-2/111_NE	**22645601**	Y5, Y12 (EZ 141)	single	9171	ML 56	3

> for flexible cables

> cable entry crimp

> bulkhead mounted, rigid

> body material: stainless steel

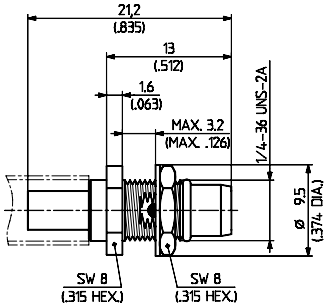

Fig. 1

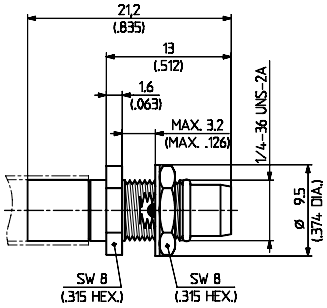

Fig. 2

HUBER+SUHNER type	Item no.	Cable group (example)	Packaging	Assembly instruction	Mounting hole	Crimp insert	Fig.
14_BMA-50-2-3/199_NE	**22645614**	U2 (RG 316/U)	single	9172	ML 56	A [1)]	1
14_BMA-50-3-3/199_NE	**22645615**	U9, 11 (RG 400/U)	single	9173	ML 56	B [2)]	2

1) MIL insert M22520/5-03A can also be used

2) MIL insert M22520/5-05A can also be used

Cable groups see page 28 | Assembly tools see page 385 | Mounting holes see page 412

Straight panel cable plugs (male)

> for semi-rigid cables

> cable entry soldered

> 2-hole mounted

> body material: CuBe, gold plated

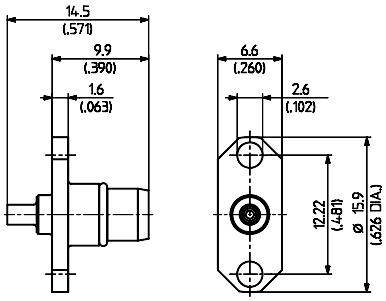

HUBER+SUHNER type	Item no.	Cable group (example)	Packaging	Assembly instruction	Notes
15_BMA-50-1-15/111_NE	**22649704**	Y2 (EZ 47)	single	27180	

Straight bulkhead cable jacks (female)

> for semi-rigid cables

> cable entry soldered

> snap-in, floating

> body material: CuBe, gold plated

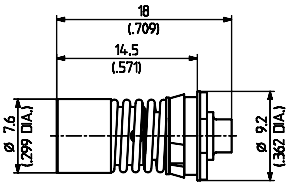

Fig. 1

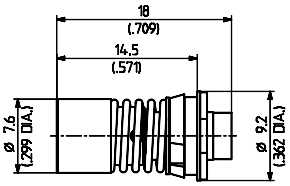

Fig. 2

Connector fixed into mounting panel with snap-in mechanism.
Recommended removal tool: 74_Z-0-0-213

HUBER+SUHNER type	Item no.	Cable group (example)	Packaging	Assembly instruction/ Mounting hole	Fig.
24_BMA-50-2-4/111_NE	**22645606**	Y3, Y11 (EZ 86)	single	9171 / ML 66	1
24_BMA-50-3-4/111_NE	**22645607**	Y5, Y12 (EZ 141)	single	9171 / ML 66	2

It is recommended to use a service loop to facilitate the float features of the connector

Cable groups see page 28 Assembly tools see page 385 Mounting holes see page 412

> for flexible cables

> cable entry crimp

> snap-in, floating

> body material: stainless steel

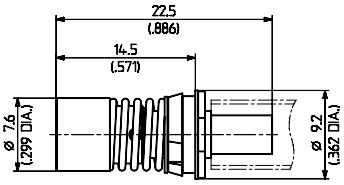

Fig. 1

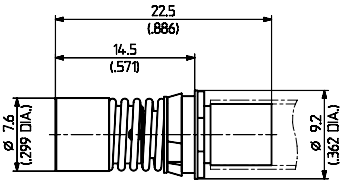

Fig. 2

Connector fixed into mounting panel with snap-in mechanism.
Recommended removal tool: 74_Z-0-0-213

HUBER+SUHNER type	Item no.	Cable group (example)	Packaging	Assembly instruction/ Mounting hole	Crimp insert	Fig.
24_BMA-50-2-5/119_NE	**22645620**	U2 (RG 316/U)	single	9172 / ML 66	A [1)]	1
24_BMA-50-3-5/119_NE	**22645621**	U9, 11 (RG 400/U)	single	9173 / ML 66	B [2)]	2

1) MIL insert M22520/5-03A can also be used

2) MIL insert M22520/5-05A can also be used

BMA

Straight panel cable jacks (female)

> for semi-rigid cables

> cable entry soldered

> flange mount, floating

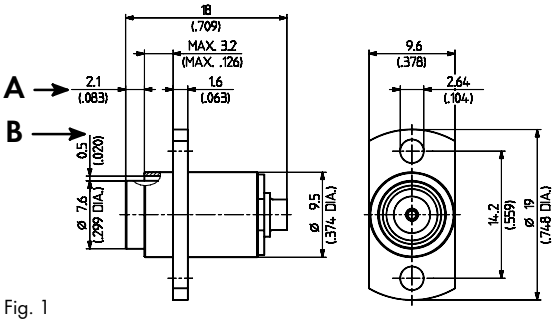

Fig. 1

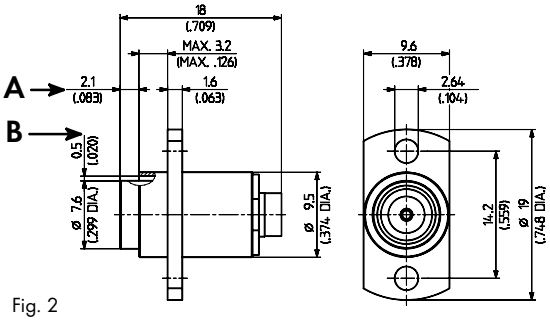

Fig. 2

A = min. 2.1 mm/.083 *in.* axial range of spring

B = min. 0.5 mm/.020 *in.* radial misalignment

Outer connector body and flange of stainless steel, inner floating part of gold plated CuBe

HUBER+SUHNER type	Item no.	Cable group (example)	Packaging	Assembly instruction/ Mounting hole	Fig.
25_BMA-50-2-2/119_NE	**22645604**	Y3, Y11 (EZ 86)	single	9171 / ML 58	1
25_BMA-50-3-2/119_NE	**22645605**	Y5, Y12 (EZ 141)	single	9171 / ML 58	2

It is recommended to use a service loop to facilitate the float features of the connector

Cable groups see page 28 | Assembly tools see page 385 | Mounting holes see page 412

> for flexible cables

> cable entry crimp

> flange mount, floating

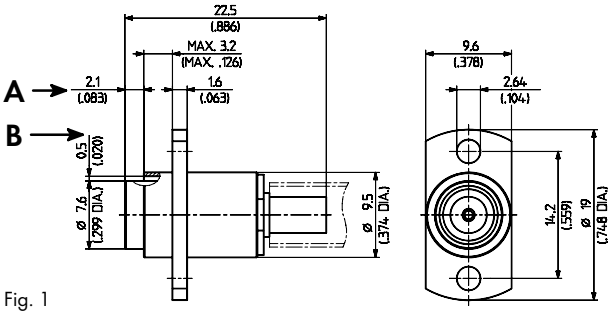

Fig. 1

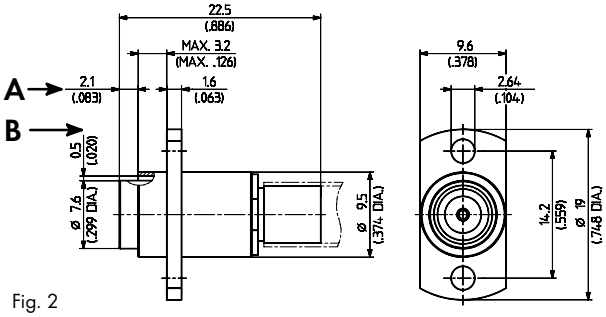

Fig. 2

A = min. 2.1 mm/.083 *in.* axial range of spring

B = min. 0.5 mm/.020 *in.* radial misalignment

Outer connector body and flange of stainless steel, inner floating part of gold plated CuBe

HUBER+SUHNER type	Item no.	Cable group (example)		Packaging	Assembly instruction/ Mounting hole	Crimp insert	Fig.
25_BMA-50-2-3/119_NE	**22645618**	U2	(RG 316/U)	single	9172 / ML 58	A [1]	1
25_BMA-50-3-3/119_NE	**22645619**	U9, 11	(RG 400/U)	single	9173 / ML 58	B [2]	2

1) MIL insert M22520/5-03A can also be used

2) MIL insert M22520/5-05A can also be used

RECEPTACLES WITH SOLDER-IN HERMETIC SEAL

Receptacles, plugs (male)

> bulkhead mounted

> threaded installation

> body material: stainless steel

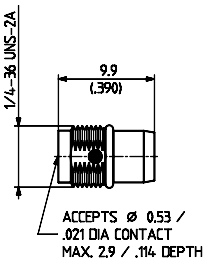

HUBER+SUHNER type	Item no.	Packaging	Mounting hole	Suitable [1] glass-bead	Notes
12_BMA-50-0-3/199 NE	**22645636**	single	ML 61	73 Z-0-0-198	

Use tool 74_Z-0-0-215 with torque wrench 74_Z-0-0-214 for mounting. For fixturing hermetic seal while soldering, fixture 74_Z-0-0-211 is recommended.

1) see page 411

Cable groups see page 28 | Assembly tools see page 385 | Mounting holes see page 412

Receptacles, jacks (female)

> bulkhead mounted
> threaded installation
> body material: stainless steel

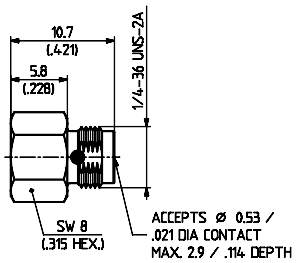

HUBER+SUHNER type	Item no.	Packaging	Mounting hole	Suitable [1] glass-bead	Notes
22_BMA-50-0-3/199_NE	**22645637**	single	ML 61	73 Z-0-0-198	

1) see page 411
Use torque wrench 74_Z-0-0-214 for mounting. For fixturing hermetic seal while soldering, fixture 74_Z-0-0-211 is recommended.

RECEPTACLES WITH SOLDER END

Receptacles, plugs (male)

> panel mounted
> body material: stainless steel

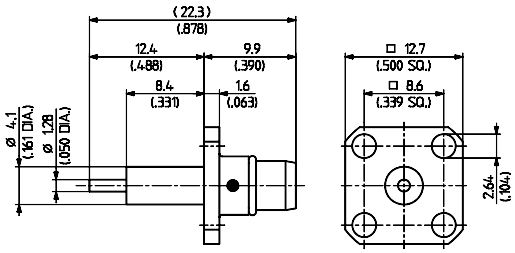

HUBER+SUHNER type	Item no.	Packaging	Flange type	Notes
13_BMA-50-0-1/199_NE	**22645622**	single	square	with extended dielectric

> panel mounted
> body material: stainless steel

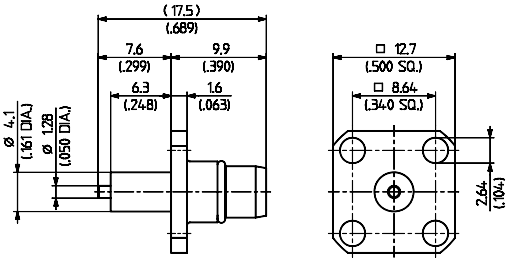

HUBER+SUHNER type	Item no.	Packaging	Flange type	Notes
13_BMA-50-0-13/199_NE	**22660107**	single	square	with extended dielectric

Cable groups see page 28 | Assembly tools see page 385 | Mounting holes see page 412

> panel mounted

> body material: stainless steel

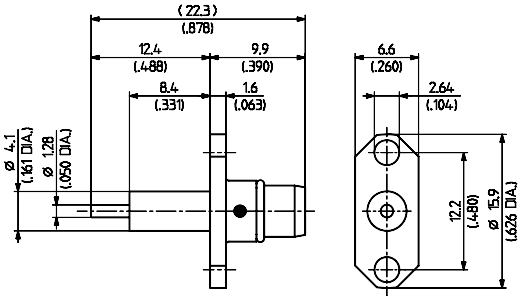

HUBER+SUHNER type	Item no.	Packaging	Flange type	Notes
13_BMA-50-0-2/199_NE	**22645623**	single	2-hole	with extended dielectric

Receptacles, jacks (female)

> panel mounted

> body material: stainless steel

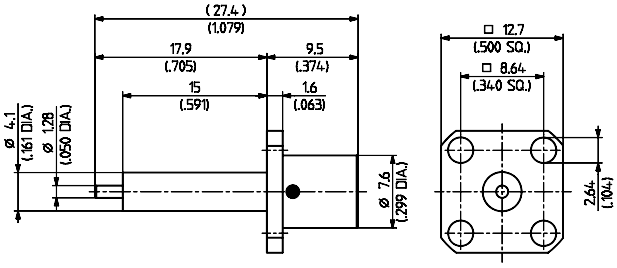

HUBER+SUHNER type	Item no.	Packaging	Flange type	Notes
23_BMA-50-0-1/199_NE	**22645624**	single	square	with extended dielectric

PCB CONNECTORS

Straight PCB plugs (male)

> body material: CuBe, gold plated

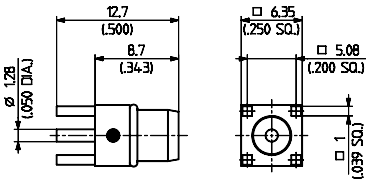

HUBER+SUHNER type	Item no.	Packaging	Mounting hole	Notes
81_BMA-50-0-1/111_NE	**22645630**	single	ML 41	

Cable groups see page 28 Assembly tools see page 385 Mounting holes see page 412

Straight PCB jacks (female)

> body material: CuBe, gold plated

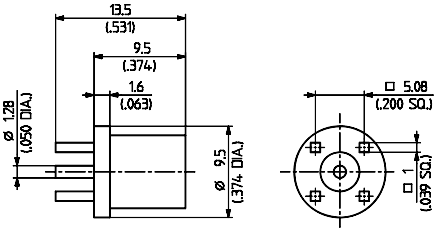

HUBER+SUHNER type	Item no.	Packaging	Mounting hole	Notes
82_BMA-50-0-1/111_NE	**22645631**	single	ML 41	

BMA

Cable groups see page 28 | Assembly tools see page 385 | Mounting holes see page 412

A FURTHER HUBER+SUHNER PRODUCT!

RF corrugated cable assemblies LISCA

Details on this product are to be found in the brochure, Item no. 23035388. Get your copy free of charge at **www.hubersuhner.com.**

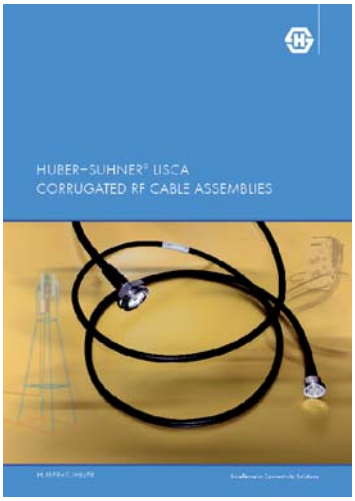

SERIES QMA, SUBMINIATURE CONNECTORS

DESCRIPTION

HUBER+SUHNER QMA coaxial connectors are available with 50 Ω impedance. The frequency range extends to 18 GHz, depending on the connector and cable type, however most of the QMA connectors are Return Loss optimised for frequencies up to 6 GHz. The interface is based on the SMA dimension, but, instead of a threaded coupling mechanism, a new snap-lock mechanism is used.
The QMA interface has a very similar performance to the SMA, but in addition it offers an easier, faster and safer coupling operation, helping the customers to save significantly time during production of their systems.
The packaging density of QMA is increased compared to SMA connectors thanks to the fact that no torque spanner is required to fasten the coupling nut.
QMA is not intermateable with SMA.

CONTENT PAGE

INTERFACE DIMENSIONS (COMPARED TO SMA)

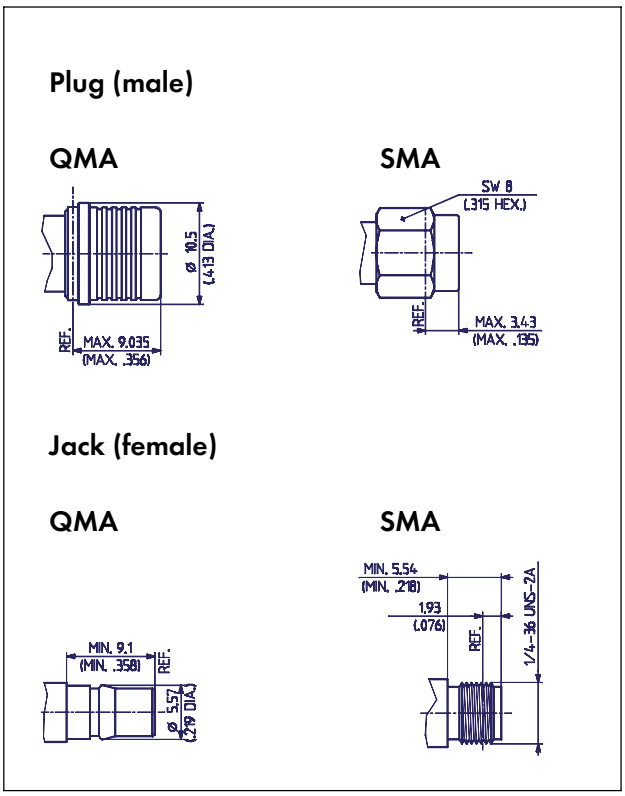

FEATURES OF QMA CONNECTORS

- Cycle time improvement for making RF connections (10 times faster to mount than threaded connectors)
- No torque required
- Higher packaging density
- Free-rotating connection when mated
- Eliminates loosening problems associated with threaded connectors
- Same performance as SMA up to 6 GHz

HUBER+SUHNER QMA - the cost effective solution for advanced RF interconnections!

IP rating (interface, mated) IP50*

*** IP68 variant available**

TECHNICAL DATA

ELECTRICAL DATA	REQUIREMENTS
Impedance	50 Ω
Frequency range	DC to 6 GHz optimized DC to 18 GHz working range [interface]
Dielectric withstanding voltage (at sea level)	1000 V rms, 50 Hz
Working voltage (at sea level)	≤ 480 V rms, 50 Hz
Insulation resistance	≥ $5 \cdot 10^3$ MΩ
Contact resistance - centre contact - outer contact	 ≤ 3 mΩ ≤ 2.5 mΩ
RF-leakage	0 ... 3 GHz ≥ –80 dB; 3 ... 6 GHz ≥ –70 dB
Return loss (typical)	DC – 3 GHz ≥ 32 dB; 3 to 6 GHz ≥ 25 dB

MECHANICAL DATA	REQUIREMENTS
Engagement force (typical)	25 N
Disengagement force (typical)	20 N
Retention force for interface	≥ 60 N
Durability (matings)	≥ 100
Distance between connectors	12.4 mm / .49 *in.* minimum

ENVIRONMENTAL DATA	TEST CONDITIONS
Temperature range	- 40°C ... + 85°C / - 40°F ... + 185°F
Thermal shock	IEC 60169-1 16.4 (-40° C / + 85° C)
Corrosion	IEC 60169-1 16.7 (48 hrs)
Vibration	IEC-68-2-64 random, 5-20 Hz:1.29 $(m/s^2)^2$/Hz 20-500 Hz: -3dB/octave
Damp heat - steady state	IEC 60169-1 16.3 (96 hrs)

MATERIAL DATA		
CONNECTOR PART	MATERIAL	PLATING
Bodies	brass	SUCOPLATE®
Solder bodies	brass	SUCOPRO
Pin contacts	brass	SUCOPRO
Socket contacts	spring bronze	SUCOPRO
Outer contacts	spring bronze	SUCOPLATE®
Insulators	PTFE or PFA	
Crimp ferrules	copper	SUCOPLATE®

Some connectors may have a specification that differs from the above mentioned data.

The products are designed and guaranteed to pass the above mentioned test procedures. Any additional or different requirement arising from specific applications or environmental conditions which is not covered by these test procedures is subject to request.

CABLE CONNECTORS

Straight cable plugs (male)

> for semi-rigid cables, SUCOFORM and MULTIFLEX cables

> cable entry soldered

> centre contact plugged-in

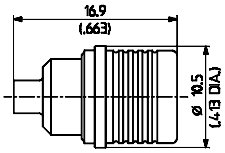

HUBER+SUHNER type	Item no.	Cable group (example)	Packaging	Assembly instruction	Notes
11_QMA-50-2-3/133_NE	**23017704**	Y11,Y3 (Sucoform 86)	single	27428	
11_QMA-50-2-3/133_NH	**23017705**	Y11,Y3 (Sucoform 86)	bulk 100 pcs.	27428	

> for semi-rigid cables, SUCOFORM and MULTIFLEX cables

> cable entry soldered

> centre contact plugged-in

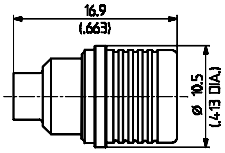

HUBER+SUHNER type	Item no.	Cable group (example)	Packaging	Assembly instruction	Notes
11_QMA-50-3-3/133_NE	**23017695**	Y12 (Sucoform 141)	single	27428	
11_QMA-50-3-3/133_NH	**23017696**	Y12 (Sucoform 141)	bulk 100 pcs.	27428	

> for flexible cables

> HUBER+SUHNER® full crimp

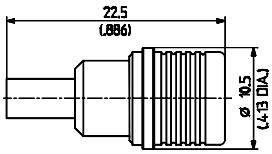

HUBER+SUHNER type	Item no.	Cable group (example)	Packaging	Assembly instruction	Crimp insert
11_QMA-50-2-1/133_NE	**23017700**	U4 (K 02252 D)	single	27427	1 A
11_QMA-50-2-1/133_NH	**23017701**	U4 (K 02252 D)	bulk 100 pcs.	27427	1 A
11_QMA-50-2-2/133_NE	**23017720**	U2 (RG 316/U)	single	27427	1 A
11_QMA-50-2-2/133_NH	**23017721**	U2 (RG 316/U)	bulk 100 pcs.	27427	1 A

Cable groups see page 28 Assembly tools see page 385 Mounting holes see page 412

> for flexible cables

> cable entry crimp

> centre contact soldered

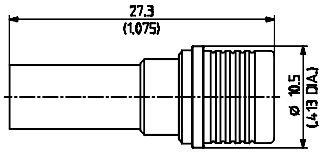

HUBER+SUHNER type	Item no.	Cable group (example)	Packaging	Assembly instruction	Crimp insert
11_QMA-50-3-1/133_NE	**23017697**	U9,U11 (RG 400/U)	single	27429	B
11_QMA-50-3-1/133_NH	**23017698**	U9,U11 (RG 400/U)	bulk 100 pcs.	27429	B
11_QMA-50-3-2/133_NE	**23017702**	U7 (RG 58 C/U)	single	27429	B
11_QMA-50-3-2/133_NH	**23017703**	U7 (RG 58 C/U)	bulk 100 pcs.	27429	B

Right angle cable plugs (male)

> for semi-rigid cables, SUCOFORM and MULTIFLEX cables

> cable entry soldered

> centre contact soldered

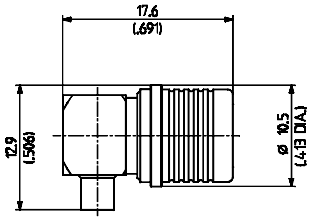

HUBER+SUHNER type	Item no.	Cable group (example)	Packaging	Assembly instruction	Notes
16_QMA-50-2-3/133_NE	**23017666**	Y11,Y3 (Sucoform 86)	single	27444	
16_QMA-50-2-3/133_NH	**23017667**	Y11,Y3 (Sucoform 86)	bulk 100 pcs.	27444	

> for semi-rigid cables, SUCOFORM and MULTIFLEX cables

> cable entry soldered

> centre contact soldered

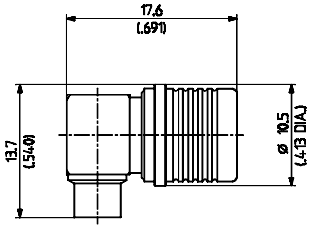

HUBER+SUHNER type	Item no.	Cable group (example)	Packaging	Assembly instruction	Notes
16_QMA-50-3-3/133_NE	**23017693**	Y5, Y12 (Sucoform 141)	single	27444	
16_QMA-50-3-3/133_NH	**23017694**	Y5, Y12 (Sucoform 141)	bulk 100 pcs.	27444	

Cable groups see page 28 | Assembly tools see page 385 | Mounting holes see page 412

> for flexible cables

> cable entry crimp

> centre contact soldered

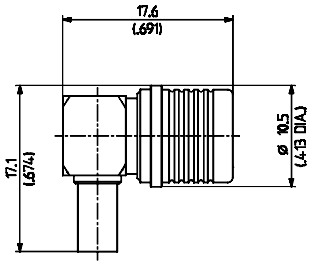

HUBER+SUHNER type	Item no.	Cable group (example)	Packaging	Assembly instruction	Crimp insert
16_QMA-50-2-1/133_NE	**23017654**	U4 (K 02252 D)	single	27443	A
16_QMA-50-2-1/133_NH	**23017644**	U4 (K 02252 D)	bulk 100 pcs.	27443	A
16_QMA-50-2-2/133_NE	**23017657**	U2 (RG 316/U)	single	27443	A
16_QMA-50-2-2/133_NH	**23017658**	U2 (RG 316/U)	bulk 100 pcs.	27443	A

> for flexible cables

> cable entry crimp

> centre contact soldered

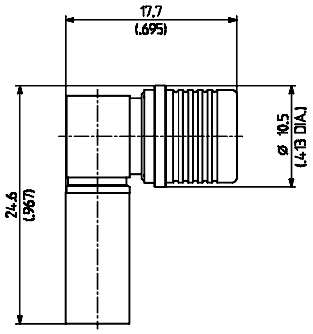

HUBER+SUHNER type	Item no.	Cable group (example)	Packaging	Assembly instruction	Crimp insert
16_QMA-50-3-1/133_NE	**23017686**	U9, 11 (RG 400/U)	single	27443	B
16_QMA-50-3-1/133_NH	**23017687**	U9, 11 (RG 400/U)	bulk 100 pcs.	27443	B
16_QMA-50-3-2/133_NE	**23017691**	U7 (RG 58 C/U)	single	27443	B
16_QMA-50-3-2/133_NH	**23017692**	U7 (RG 58 C/U)	bulk 100 pcs.	27443	B

> for flexible cables

> cable entry crimp

> centre contact soldered

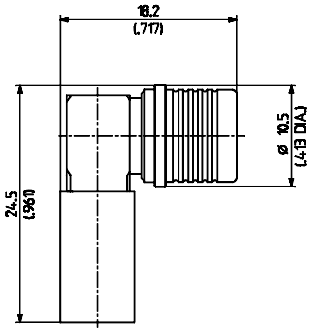

HUBER+SUHNER type	Item no.	Cable group (example)	Packaging	Assembly instruction	Crimp insert
16_QMA-50-4-1/133_NH	**23012849**	S16 (S 04262 D)	bulk 100 pcs.	27405	C

Cable groups see page 28 | Assembly tools see page 385 | Mounting holes see page 412

Straight bulkhead cable jacks (female)

> for semi-rigid cables, SUCOFORM and MULTIFLEX cables

> cable entry soldered

> centre contact plugged-in

> with panel seal

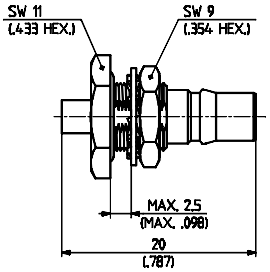

HUBER+SUHNER type	Item no.	Cable group (example)	Packaging	Assembly Instruction/ Mounting Hole	Notes
24_QMA-50-2-1/111_NE	**23017742**	Y11,Y3 (Sucoform 86)	single	27428 / ML 20	
24_QMA-50-2-1/111_NH	**23017743**	Y11,Y3 (Sucoform 86)	bulk 100 pcs.	27428 / ML 20	

> for semi-rigid cables, SUCOFORM and MULTIFLEX cables

> cable entry soldered

> centre contact plugged-in

> with panel seal

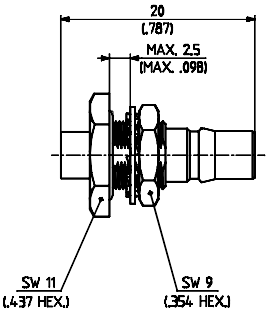

HUBER+SUHNER type	Item no.	Cable group (example)	Packaging	Assembly Instruction/ Mounting Hole	Notes
24_QMA-50-3-3/111_NE	**23017683**	Y5, Y12 (Sucoform 141)	single	27428 / ML 20	
24_QMA-50-3-3/111_NH	**23017684**	Y5, Y12 (Sucoform 141)	bulk 100 pcs.	27428 / ML 20	

> for flexible cables

> cable entry crimp

> centre contact soldered

> with panel seal

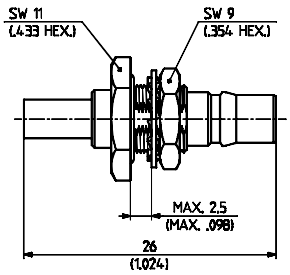

HUBER+SUHNER type	Item no.	Cable group (example)	Packaging	Assembly Instruction/ Mounting Hole	Crimp insert
24_QMA-50-2-2/133_NE	**23017829**	U4 (K 02252 D)	single	27429 / ML 20	A
24_QMA-50-2-2/133_NH	**23017830**	U4 (K 02252 D)	bulk 100 pcs.	27429 / ML 20	A
24_QMA-50-2-3/133_NE	**23017837**	U2 (RG 316/U)	single	27429 / ML 20	A
24_QMA-50-2-3/133_NH	**23017838**	U2 (RG 316/U)	bulk 100 pcs.	27429 / ML 20	A

Cable groups see page 28 Assembly tools see page 385 Mounting holes see page 412

> for flexible cables

> cable entry crimp

> centre contact soldered

> with panel seal

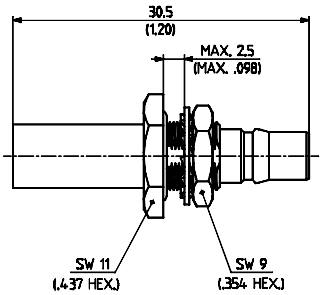

HUBER+SUHNER type	Item no.	Cable group (example)	Packaging	Assembly Instruction/ Mounting Hole	Crimp insert
24_QMA-50-3-1/133_NE	**23017822**	U9, 11 (RG 400/U)	single	27429 / ML 20	B
24_QMA-50-3-1/133_NH	**23017823**	U9, 11 (RG 400/U)	bulk 100 pcs.	27429 / ML 20	B
24_QMA-50-3-2/133_NE	**23017795**	U7 (RG 58 C/U)	single	27429 / ML 20	B
24_QMA-50-3-2/133_NH	**23017796**	U7 (RG 58 C/U)	bulk 100 pcs.	27429 / ML 20	B

RECEPTACLES WITH SOLDER END

Receptacles, jacks (female)

> bulkhead mounted

> press-in chassis mount

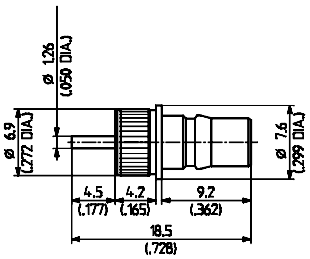

HUBER+SUHNER type	Item no.	Packaging	Mounting hole	Notes
22_QMA-50-0-7/111_NH	**84009240**	bulk 100 pcs.	ML 143	press-in
22_QMA-50-0-7/133_NF	**84001926**	bulk 50 pcs.	ML 143	press-in

> bulkhead mounted

> without panel seal

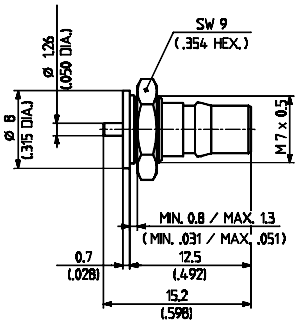

HUBER+SUHNER type	Item no.	Packaging	Mounting hole	Notes
22_QMA-50-0-3/133_NH	**23018585**	bulk 100 pcs.	ML 20	flush dielectric

Cable groups see page 28 Assembly tools see page 385 Mounting holes see page 412

> bulkhead mounted
> without panel seal

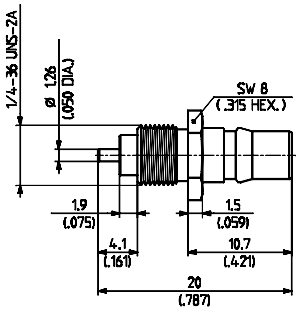

HUBER+SUHNER type	Item no.	Packaging	Notes
22_QMA-50-0-4/133_NH	**23022628**	bulk 100 pcs.	extended dielectric

> panel mounted
> 2-hole flange

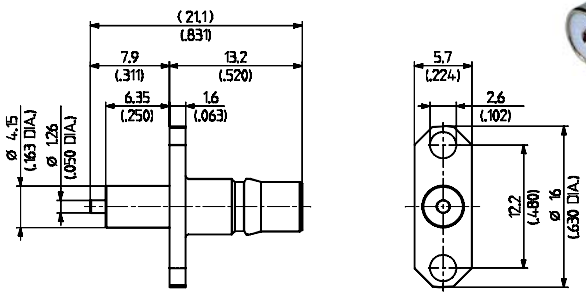

HUBER+SUHNER type	Item no.	Packaging	Notes
23_QMA-50-0-2/111_NH	**23024985**	bulk 100 pcs.	extended dielectric

> panel mounted
> 4-hole flange

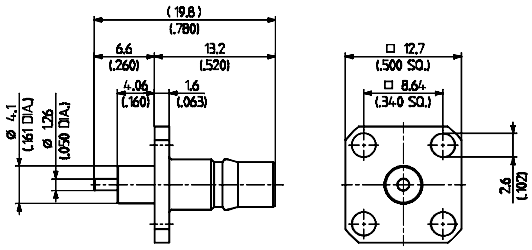

HUBER+SUHNER type	Item no.	Packaging	Notes
23_QMA-50-0-3/111_NH	**23025007**	bulk 100 pcs.	extended dielectric

Cable groups see page 28 | Assembly tools see page 385 | Mounting holes see page 412

PCB CONNECTORS

Straight PCB jacks (female)

> with stand-off

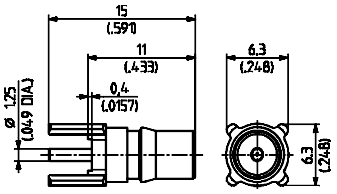

HUBER+SUHNER type	Item no.	Packaging	PCB Layout	Notes
82_QMA-50-0-3/111_NH	**23017656**	bulk 100 pcs.	ML 41	

> surface mount type SMT

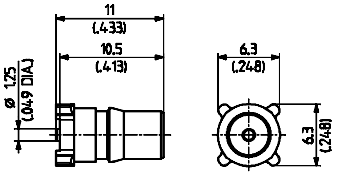

HUBER+SUHNER type	Item no.	Packaging	PCB Layout	Notes
82_QMA-S50-0-2/111_NH	**23017631**	bulk 100 pcs.	ML 136	

Right angle PCB jacks (female)

> surface mount type SMT (with positioning pin)

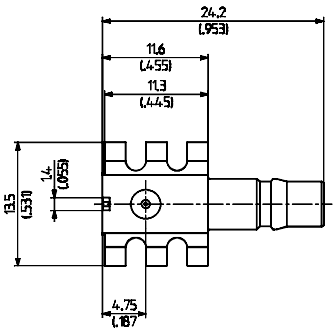

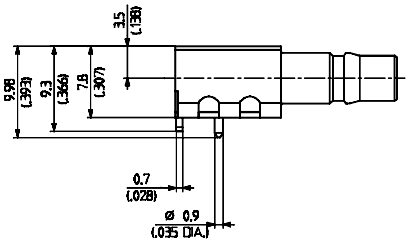

HUBER+SUHNER type	Item no.	Packaging	PCB Layout	Notes
85_QMA-S50-0-2/111_NM	**23021299**	tape and reel	ML 137	

Cable groups see page 28 | Assembly tools see page 385 | Mounting holes see page 412

> with stand-off

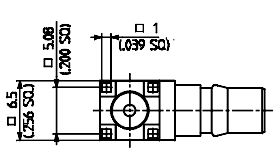

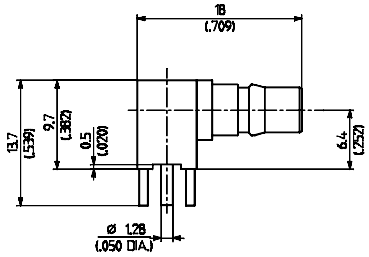

HUBER+SUHNER type	Item no.	Packaging	PCB Layout	Notes
85_QMA-50-0-3/111_NH	**23021463**	bulk 100 pcs.	ML 41	

> surface mount type SMT

> bulkhead mounted

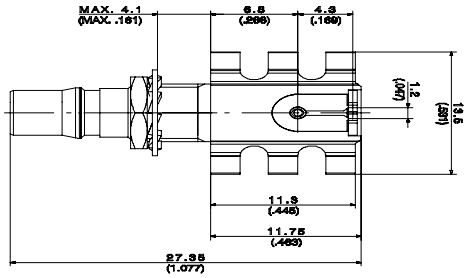

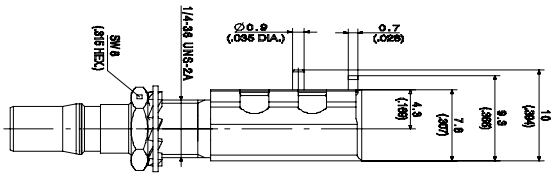

HUBER+SUHNER type	Item no.	Packaging	PCB Layout	Notes
85_QMA-S50-0-5/111_NM	**84002573**	tape and reel	ML 137	

Cable groups see page 28 Assembly tools see page 385 Mounting holes see page 412

QMA-CALIBRATION WITH ADAPTOR SWAPPING METHOD

For return Loss/VSWR measurement of QMA connectors, HUBER+SUHNER recommends the following calibration method:

1. Calibration with PC3.5 to PC3.5 calibration adaptors (SMA calibration)

Adaptors: 31_PC35-50-0-2/199_NE (Item no. 23020456) or
32_PC35-50-0-2/199_NE (Item no. 23020457) or
33_PC35-50-0-2/199_NE (Item no. 23020453) see all three adaptors on page 338

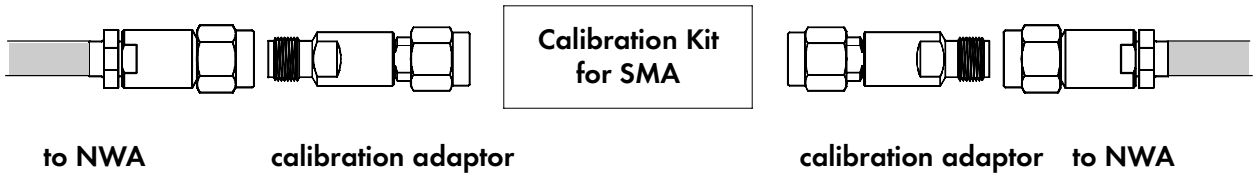

2. Exchanging of the calibration adaptors with the required QMA adaptors

31_PC35-QMA-50-1/199_NE (Item no. 23017468) see page 376 or
32_PC35-QMA-50-1/1–_NE (Item no. 23017489) see page 376 or
33_PC35-QMA–50-1/199_NE (Item no. 23017467) see page 376 or
33_QMA-PC35-50-1/1–_NE (Item no. 23017488) see page 376

Thanks to the same electrical length and the same return loss behaviour of all these adaptors, the adaptor swapping method can be used (same dimensions of all electrical relevant piece parts in these adaptors).

Cable groups see page 28 | Assembly tools see page 385 | Mounting holes see page 412

A FURTHER HUBER+SUHNER PRODUCT!

Waterproof QMA RF connector

Details on this product are to be found in the brochure,
Item no. 84032821. Get your copy free of charge at
www.hubersuhner.com.

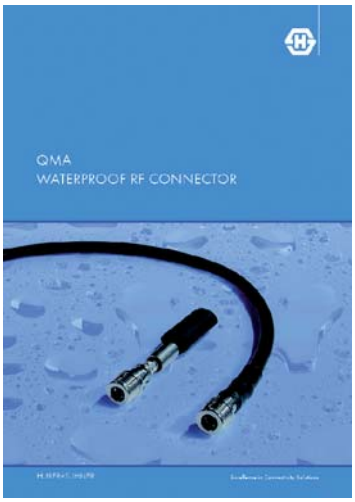

SERIES QN, COAXIAL CONNECTORS

DESCRIPTION

HUBER+SUHNER QN coaxial connectors are available with 50 Ω impedance. The frequency range extends to 11 GHz, depending on the connector and cable type, however most of the QN connectors are Return Loss optimised for frequencies up to 6 GHz. The interface is based on the inner dimensions of the N connector, but, instead of a threaded coupling mechanism, a new snap-lock mechanism is used.
The QN interface has a very similar performance to the N, but in addition it offers an easier, faster and saver coupling operation, helping the customers to save significantly time during production of their systems.
The packaging density of QN increased compared to N thanks to the fact that no torque spanner is required to fasten the coupling nut. Additionally the outer dimensions of QN are smaller than N, leading to the advantage that TNC-size flanges can be used at QN connectors.

CONTENT PAGE

INTERFACE DIMENSIONS (COMPARED TO N)

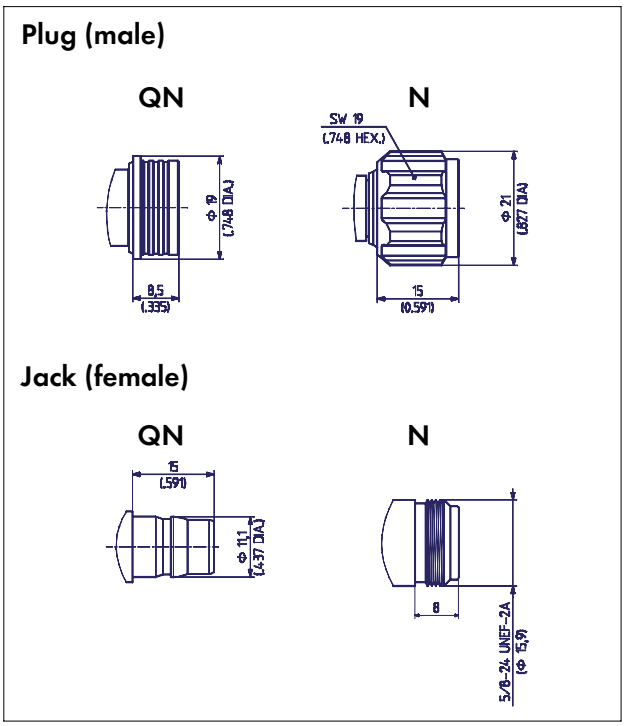

FEATURES OF QN CONNECTORS

> Cycle time improvement for making RF connections (10 times faster to mount than threaded connectors)
> No torque required
> Higher packaging density
> Free-rotating connection when mated
> Eliminates loosening problems associated with threaded connectors
> Same performance as N
> Best intermodulation performance thanks to the unique interface design

HUBER+SUHNER QN - the cost effective solution for advanced RF interconnections !

IP rating (interface, mated) IP68

QN

TECHNICAL DATA

ELECTRICAL DATA	REQUIREMENTS
Impedance	50 Ω
Frequency range	DC to 6 GHz (optimized) DC to 11 GHz (working range)
Dielectric withstanding voltage (at sea level, in V rms, 50 Hz))	2500
Working voltage (at sea level, in V rms, 50 Hz)	≤ 1000
Insulation resistance	≥ $5 \cdot 10^3$ MΩ
Contact resistance - centre contact - outer contact	 ≤ 1.5 mΩ ≤ 1.5 mΩ
RF-leakage	100 MHz to 3 GHz ≥ –90 dB
Return loss (typical)	DC – 3 GHz ≥ 32 dB; 3 to 6 GHz ≥ 25 dB; 6 to 11 GHz ≥ 20 dB
Intermodulation	better –155 dBc (2 x 43 dBm carrier)

MECHANICAL DATA	REQUIREMENTS
Durability (matings)	≥ 100
Engagement force (typical)	30 N
Disengagement force (typical)	30 N
Retention force for interface	≥ 450 N
Bending moment admissible (interface)	≤ 10 Nm
Contact captivation	≥ 28 N

1) Value considers maximum load of the cables without irreversible variations of specifications.

ENVIRONMENTAL DATA	TEST CONDITIONS
Temperature range	– 40°C ... + 125°C / – 40 °F ... + 257 °F
Climatic category	40 / 125 / 21 (IEC 60169_1 16.2)
Moisture resistance	MIL–STD–202 F, Method 106 F
Corrosion	Saltspray test acc. to MIL-STD-202 F, Method 101 D, Condition B
Vibration	IEC-1169-1 paragraph 9.3.3. (10-500 Hz; 5g)
Shock	MIL-STD-202 F, Method 213, Condition I
Rapid change of temperature	IEC 60169-1 16.4 (–40° C ... + 125° C / – 40 °F ... + 257 °F)

MATERIAL DATA		
CONNECTOR PART	**MATERIAL**	**PLATING**
Bodies	brass	SUCOPLATE®
Pin contacts	brass	SUCOPRO
Socket contacts	spring bronze	SUCOPRO
Insulators	typ.: PTFE or PFA	
Contact washer	spring bronze or copper beryllium	SUCOPRO

Some connectors may have a specification that differs from the above mentioned data.

The products are designed and guaranteed to pass the above mentioned test procedures. Any additional or different requirement arising from specific applications or environmental conditions which is not covered by these test procedures is subject to request.

CABLE CONNECTORS

Straight cable plugs (male)

> for semi-rigid cables, SUCOFORM and MULTIFLEX cables

> cable entry soldered

> centre contact plugged-in

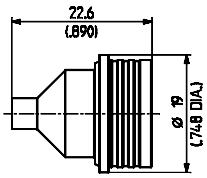

HUBER+SUHNER type	Item no.	Cable group (example)	Packaging	Assembly instruction	Notes
11_QN-50-3-3/113_NE	**23033393**	Y5, Y12 (SM 141)	single	27502	

> for flexible cables

> HUBER+SUHNER® full crimp

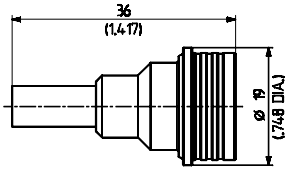

HUBER+SUHNER type	Item no.	Cable group (example)	Packaging	Assembly instruction	Crimp insert
11_QN-50-3-1/133_NE	**23033391**	U9 (EF 142)	single	27500	2B
11_QN-50-3-2/133_NE	**23033392**	U7 (RG 58 C/U)	single	27501	2B

> for flexible cables

> HUBER+SUHNER® full crimp

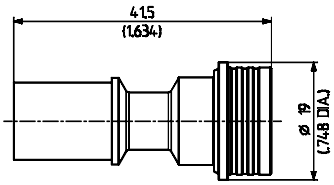

HUBER+SUHNER type	Item no.	Cable group (example)	Packaging	Assembly instruction	Crimp insert
11_QN-50-7-1/133_NE	**23033394**	U32 (RG 214/U)	single	27503	3D
11_QN-50-7-2/133_NE	**23033395**	U33 (EF 393)	single	27504	2.5D
11_QN-50-7-3/133_NE	**23033396**	U29 (RG 213/U)	single	27505	3D

Cable groups see page 28 Assembly tools see page 385 Mounting holes see page 412

Right angle cable plugs (male)

> for semi-rigid cables, SUCOFORM and MULTIFLEX cables

> cable entry soldered

> centre contact soldered

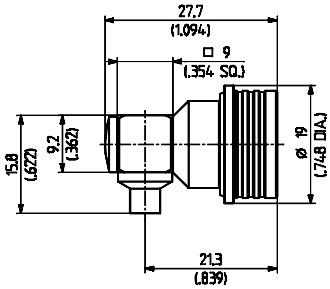

HUBER+SUHNER type	Item no.	Cable group (example)	Packaging	Assembly instruction	Notes
16_QN-50-3-3/13-_NE	**23033268**	Y5, Y12 (SM 141)	single	27508	

> for flexible cables

> cable entry crimp

> centre contact soldered

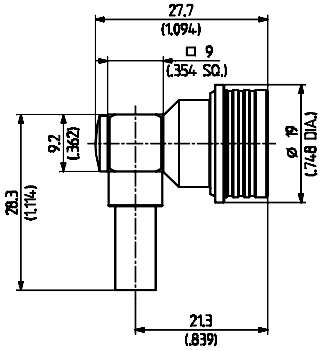

HUBER+SUHNER type	Item no.	Cable group (example)	Packaging	Assembly instruction	Crimp insert
16_QN-50-3-1/133_NE	**23033267**	U11 (EF 400)	single	27506	B
16_QN-50-3-2/133_NE	**23033398**	U7 (RG 58 C/U)	single	27507	B
16_QN-50-4-1/133_NE	**23033078**	S16 (S 04262 D)	single	27509	C

> for flexible cables

> cable entry crimp

> centre contact soldered

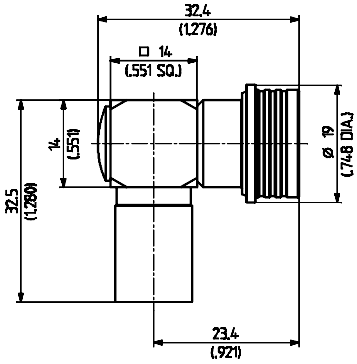

HUBER+SUHNER type	Item no.	Cable group (example)	Packaging	Assembly instruction	Crimp insert
16_QN-50-7-1/133_NE	**23032410**	U32,U33 (EF 393)	single	27510	D
16_QN-50-7-2/133_NE	**23033399**	U29 (RG 213/U)	single	27511	D

Cable groups see page 28 | Assembly tools see page 385 | Mounting holes see page 412

Straight bulkhead cable jacks (female)

> for semi-rigid cables, SUCOFORM and MULTIFLEX cables

> cable entry soldered

> centre contact plugged-in

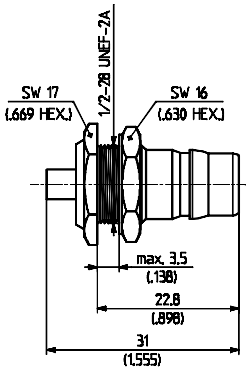

HUBER+SUHNER type	Item no.	Cable group (example)	Packaging	Assembly instruction	Mounting hole
24_QN-50-3-3/13-_NE	**23033423**	Y5, Y12 (SM 141)	single	27514	ML 112

> for flexible cables

> HUBER+SUHNER® full crimp

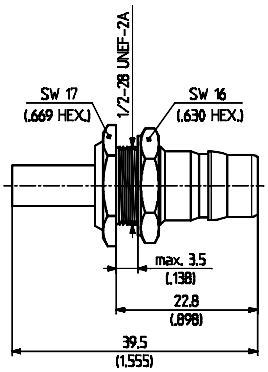

HUBER+SUHNER type	Item no.	Cable group (example)	Packaging	Assembly instruction/ Mounting hole	Crimp insert
24_QN-50-3-1/133_NE	**23033400**	U9 (EF 142)	single	27512 / ML 112	2B
24_QN-50-3-2/133_NE	**23033402**	U7 (RG 58 C/U)	single	27513 / ML 112	2B

> for flexible cables

> HUBER+SUHNER® full crimp

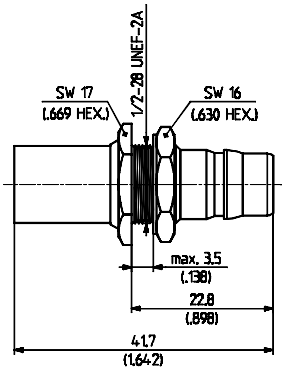

HUBER+SUHNER type	Item no.	Cable group (example)	Packaging	Assembly instruction/ Mounting hole	Crimp insert
24_QN-50-7-1/133_NE	**23033403**	U33 (EF 393)	single	27515 / ML 112	2.5D
24_QN-50-7-2/133_NE	**23033404**	U32 (RG 214/U)	single	27516 / ML 112	3D
24_QN-50-7-3/133_NE	**23033405**	U29 (RG 213/U)	single	27517 / ML 112	3D

Cable groups see page 28 Assembly tools see page 385 Mounting holes see page 412

RECEPTACLES WITH SOLDER END

Receptacles, jacks (female)

> bulkhead mounted

> press-in chassis mount

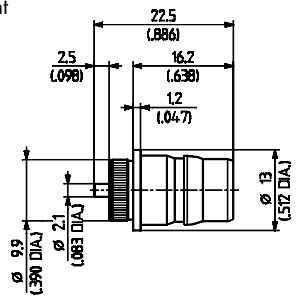

HUBER+SUHNER type	Item no.	Packaging	Notes
22_QN-50-0-1/133_NE	**23033237**	single	press-in
22_QN-50-0-1/133_NY	**23033904**	bulk 100 pcs.	press-in

> panel mounted

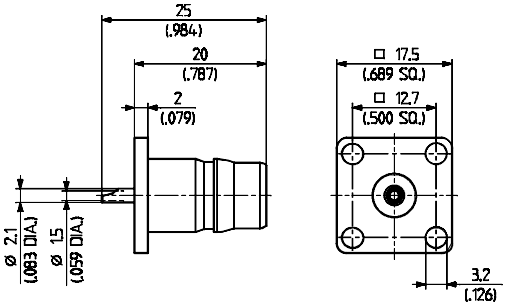

HUBER+SUHNER type	Item no.	Packaging	Notes
23_QN-50-0-1/133_NE	**23033251**	single	flange with same dimensions as TNC
23_QN-50-0-1/133_NY	**23033252**	bulk 100 pcs.	flange with same dimensions as TNC

Cable groups see page 28 | Assembly tools see page 385 | Mounting holes see page 412

QN-CALIBRATION WITH ADAPTOR SWAPPING METHOD

For return Loss/VSWR measurement of QN connectors, HUBER+SUHNER recommends the following calibration method:

1. Calibration with PC7 to PC7 calibration adaptors (PC7calibration)
Adaptors: 32_PC7-U50-0-1/1–_NE (Item no. 23032719) and
33_PC7-U50-0-1/1–_NE (Item no. 23032721)

Calibration Kit for PC7

to NWA **calibration adaptor** **calibration adaptor** **to NWA**

Alternative calibration with N to PC7 calibration adaptors (N calibration)
Adaptors: 32_N-PC7-50-6/1–_NE (Item no. 23032917) see page 373 or
33_PC7-N-50-6/1–_NE (Item no. 23032916) see page 374

Calibration Kit for N

to NWA **calibration adaptor** **calibration adaptor** **to NWA**

2. Exchanging of the calibration adaptors with the required QN adaptors
32_PC7-QN-50-1/1–_NE (Item no. 23032720) see page 377 or
33_PC7-QN-50-1/1–_NE (Item no. 23032722) see page 377

DUT

Thanks to the same electrical length and the same return loss behaviour of all these adaptors, the adaptor swapping method can be used (same dimensions of all electrical relevant piece parts in these adaptors).

Cable groups see page 28 Assembly tools see page 385 Mounting holes see page 412

SERIES BNC 50 Ω, COAXIAL MINIATURE CONNECTORS

DESCRIPTION

HUBER+SUHNER BNC is still one of the most popular connector series, featuring a two stud bayonet coupling mechanism, which is particularly useful for frequently coupled and uncoupled RF connections with frequencies up to 4 GHz.

Compatibility

50 Ω BNC connectors and 75 Ω BNC connectors are intermateable without any restrictions.

CONTENTS PAGE

INTERFACE DIMENSIONS

Plug (male)

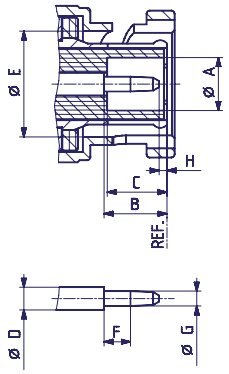

Jack (female)

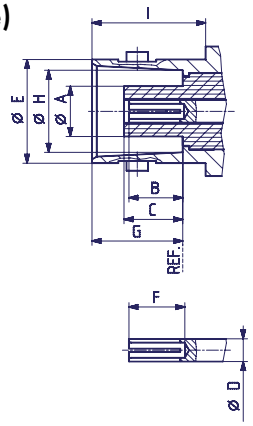

INTERFACE DIMENSIONS (MM / *INCHES*)

	Plug		Jack	
	min.	max.	min.	max.
A	4.83/.190	–	–	4.72/.186
B	5.33/.210	5.84/.230	4.72/.186	5.23/.206
C	5.28/.208	5.79/.228	4.78/.188	5.28/.208
D	2.06/.081	2.21/.087	2.06/.081	2.21/.087
E	9.78/.385	9.91/.390	9.60/.378	9.70/.382
F	1.98/.078	–	4.95/.195	–
G	1.32/.052	1.37/.054	8.31/.327	8.51/.335
H	0.08/.003	–	8.10/.319	8.15/.321
I	–	–	10.52/.414	–

Interface dimensions conformable to the Standards:

International: **IEC 61169-8**
Europe: **CECC 22120**
USA: **MIL-C- 39012,**
BNC Interface MIL-STD-348A/301
Great Britain: **BS 9210 N 004**

IP rating (interface, mated) IP64

BNC

TECHNICAL DATA

ELECTRICAL DATA	REQUIREMENTS
Impedance	50 Ω
Frequency range (for connector interface)	DC ... 4 GHz
Dielectric withstanding voltage (at sea level)	1.5 kV rms, 50 Hz (depending on cable)
Working voltage (at sea level)	500 V rms, 50 Hz (depending on cable)
Insulation resistance	$\geq 5 \cdot 10^3$ MΩ
Contact resistance - centre contact - outer contact	 ≤ 1.5 mΩ ≤ 1 mΩ
RF-leakage (between 2 ÷ 3 GHz)	≥ 55 dB

MECHANICAL DATA	REQUIREMENTS
Coupling nut torque	7 Ncm ... 28 Ncm / *0.6 in. lbs ... 2.5 in. lbs*
Coupling nut retention force	≥ 450 N / *101.2 lbs*
Contact captivation	≥ 27 N / *6.1 lbs*
Cable retention force[1)]	see pages 28 – 34
Durability (matings)	≥ 500

1) Value considers maximum load of the cables without irreversible variations of specifications.

ENVIRONMENTAL DATA	TEST CONDITIONS
Temperature range	– 65°C ... + 165°C / – 85 °F ... + 329 °F
Climatic category	IEC → 55/155/21
Thermal shock	MIL-STD-202, Method 107, Condition B
Moisture resistance	MIL-STD-202, Method 106
Corrosion	Saltspray test acc. to MIL-STD-202, Method 101, Condition B
Vibration	MIL-STD-202, Method 204, Condition B
Shock	MIL-STD-202, Method 213, Condition G

MATERIAL DATA		
CONNECTOR PART	**MATERIAL**	**PLATING**
Bodies	brass	SUCOPLATE® / SUCOPRO
Pin contacts	brass	gold / SUCOPRO
Socket contacts	copper-beryllium alloy copper alloy	gold / SUCOPRO
Crimp ferrules	copper brass	SUCOPLATE®
Insulators	PTFE or PFA	
Gaskets	silicone rubber	

Some connectors may have a specification that differs from the above mentioned data.

The products are designed and guaranteed to pass the above mentioned test procedures. Any additional or different requirement arising from specific applications or environmental conditions which is not covered by these test procedures is subject to request.

CABLE CONNECTORS

Straight cable plugs (male)

> for semi-rigid cables

> cable entry soldered

> centre contact soldered

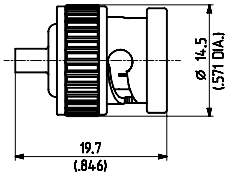

Fig. 1

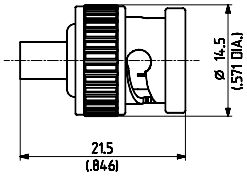

Fig. 2

HUBER+SUHNER type	Item no.	Cable group (example)	Packaging	Assembly instruction	Fig.	Notes
11_BNC-50-2-20/103_NE ⊞	**22641778**	Y3, Y11 (EZ 86)	single	9100	1	
11_BNC-50-3-54/103_NE ⊞	**22540108**	Y5, Y12 (EZ 141)	single	9106	2	

> for flexible cables

> cable entry clamp

> centre contact soldered

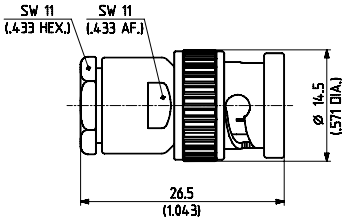

HUBER+SUHNER type	Item no.	Cable group (example)	Packaging	Assembly instruction	Notes
11_BNC-50-1-1/133_NE	**22540021**	U1 (RG 178 B/U)	single	3005	
11_BNC-50-2-1/133_NE	**22540029**	U2 (RG 316/U)	single	3005	
11_BNC-50-3-1/133_NE ⊞	**22540045**	U7, 10 (RG 58C/U)	single	3004	
11_BNC-50-3-5/133_NE	**22540054**	U7, 10 (RG 58C/U)	single	3005	

⊞ **centre contact NOT captivated**

Cable groups see page 28 Assembly tools see page 385 Mounting holes see page 412

> for flexible cables

> cable entry clamp

> centre contact soldered

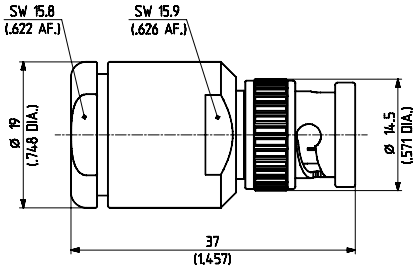

HUBER+SUHNER type	Item no.	Cable group (example)	Packaging	Assembly instruction	Notes
11_BNC-50-7-1/133_NE	**22540145**	U28 (RG 213/U)	single	3008	
11_BNC-50-7-2/133_NE	**22540149**	U33 (RG 214/U)	single	3008	

> for flexible cables

> HUBER+SUHNER® full crimp

> taper sleeves see page 406

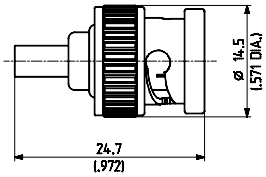

Fig. 1

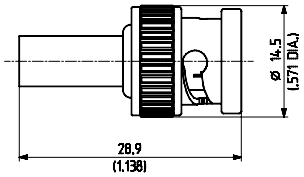

Fig. 2

HUBER+SUHNER type	Item no.	Cable group (example)	Packaging	Assembly instruction	Crimp insert	Fig.
11_BNC-50-1-5/133_NE	**22641759**	U1 (RG 178 B/U)	single	9068	1 A	1
11_BNC-50-2-13/133_NE	**22543749**	U2 (RG 316/U)	single	9068	1 A	1
11_BNC-50-2-13/133_NH	**22644716**	U2 (RG 316/U)	bulk 100 pcs.	9068	1 A	1
11_BNC-50-2-14/133_NE	**22641683**	U4 (K 02252 D)	single	9068	1 A	1
11_BNC-50-2-14/133_NH	**22649839**	U4 (K 02252 D)	bulk 100 pcs.	9068	1 A	1
11_BNC-50-2-16/133_NE	**22544026**	U3 (G 01130 HT)	single	9068	1 A	1
11_BNC-50-2-16/133_NH	**22648466**	U3 (G 01130 HT)	bulk 100 pcs.	9068	1 A	1
11_BNC-50-3-4/133_NE	**22540052**	U7 (RG 58 C/U)	single	3015	2 B	2
11_BNC-50-3-4/133_NH	**22641268**	U7 (RG 58 C/U)	bulk 100 pcs.	3015	2 B	2
11_BNC-50-3-16/133_NE	**22540071**	U9 (RG 223/U)	single	3015	2 B	2
11_BNC-50-3-16/133_NH	**22652130**	U9 (RG 223/U)	bulk 100 pcs.	3015	2 B	2
11_BNC-50-3-36/133_NE	**22540089**	U13 (G 03130-HT)	single	27057	2 C	2
11_BNC-50-3-52/133_NE	**22645522**	U11 (RG 400/U)	single	3015	2 B	2
11_BNC-50-3-52/133_NH	**22652006**	U11 (RG 400/U)	bulk 100 pcs.	3015	2 B	2
11_BNC-50-3-58/133_NE	**22641576**	U8 (S 03232-1)	single	3015	2 B	2
11_BNC-50-3-58/133_NH	**23008429**	U8 (S 03232-1)	bulk 100 pcs.	3015	2 B	2
11_BNC-50-4-4/133_NE	**22540115**	U16 (RG 59 B/U)	single	3015	2 C	2
11_BNC-50-4-4/133_NH	**22648238**	U16 (RG 59 B/U)	bulk 100 pcs.	3015	2C	2
11_BNC-50-4-23/133_NE	**22543958**	U16 (RG 62 A/U)	single	9098	2 C	2

Cable groups see page 28 Assembly tools see page 385 Mounting holes see page 412

> for flexible cables

> HUBER+SUHNER® full crimp

> taper sleeves see page 406

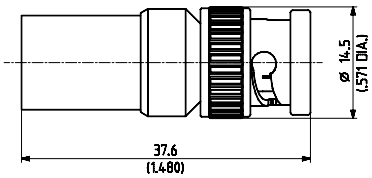

HUBER+SUHNER type	Item no.	Cable group (example)	Packaging	Assembly instruction	Crimp insert
11_BNC-50-7-6/133_NE	**22640863**	U32 (RG 214/U)	single	3061	3 D
11_BNC-50-7-7/133_NE	**22543766**	U29 (RG 213/U)	single	3061	3 D

Right angle cable plugs (male)

> for flexible cables

> cable entry clamp

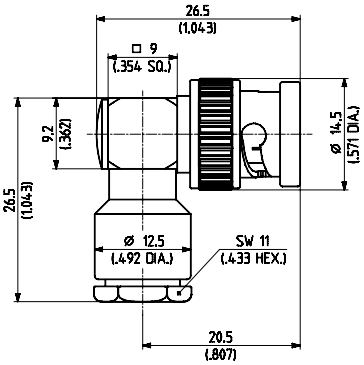

HUBER+SUHNER type	Item no.	Cable group (example)	Packaging	Assembly instruction	Notes
16_BNC-50-2-9/133_NE	**84013192**	U2 (RG 316/U)	single	3024	
16_BNC-50-3-25/133_NE	**84013233**	U7, 10 (RG 58C/U)	single	3024	

Cable groups see page 28 Assembly tools see page 385 Mounting holes see page 412

> for flexible cables

> cable entry clamp

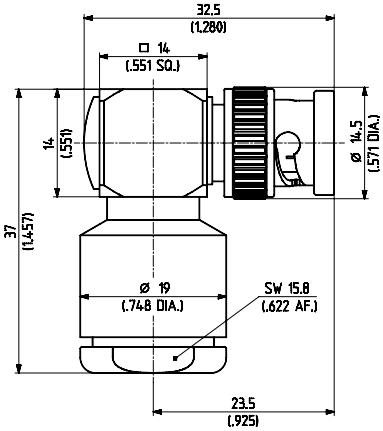

HUBER+SUHNER type	Item no.	Cable group (example)	Packaging	Assembly instruction	Notes
16_BNC-50-7-6/133_NE	**22651588**	U28 (RG 213/U) U33 (RG 214/U)	single	27121	

> for flexible cables

> cable entry crimp

> centre contact soldered

> taper sleeves see page 406

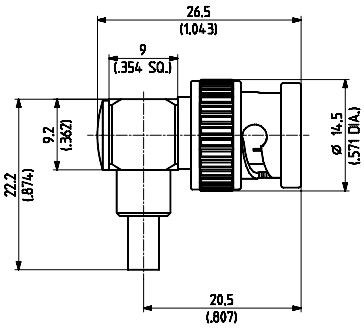

Fig. 1

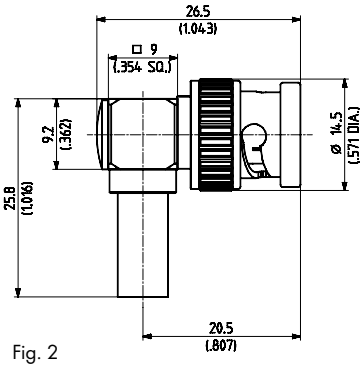

Fig. 2

HUBER+SUHNER type	Item no.	Cable group (example)	Packaging	Assembly instruction	Crimp insert	Fig.
16_BNC-50-2-3/133_NE	**22540168**	U2 (RG 316/U)	single	3079	A	1
16_BNC-50-2-3/133_NH	**22648628**	U2 (RG 316/U)	bulk 100 pcs.	3079	A	1
16_BNC-50-2-5/133_NE	**22540169**	U4 (K 02252 D)	single	3079	A	1
16_BNC-50-2-5/133_NH	**22650221**	U4 (K 02252 D)	bulk 100 pcs.	3079	A	1
16_BNC-50-3-5/133_NE	**22540185**	U7 (RG 58 C/U)	single	3058	B	2
16_BNC-50-3-7/133_NE	**22540192**	U9, 11 (RG 400/U)	single	3058	B	2
16_BNC-50-3-7/133_NH	**22650222**	U9, 11 (RG 400/U)	bulk 100 pcs.	3058	B	2

Cable groups see page 28 Assembly tools see page 385 Mounting holes see page 412

> for flexible cables

> HUBER+SUHNER® full crimp

> taper sleeves see page 406

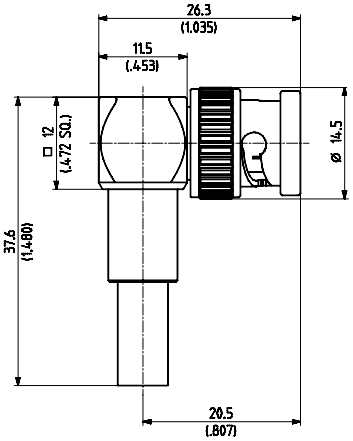

HUBER+SUHNER type	Item no.	Cable group (example)	Packaging	Assembly instruction	Crimp insert
16_BNC-50-3-13/133_NE	**22540198**	U7 (RG 58 C/U)	single	3015	2 B

Straight cable jacks (female)

> for flexible cables

> cable entry clamp

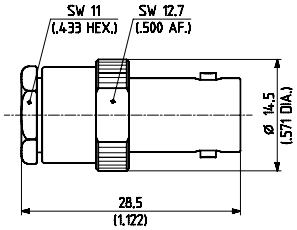

HUBER+SUHNER type	Item no.	Cable group (example)	Packaging	Assembly instruction	Notes
21_BNC-50-2-1/133_NE	**22540228**	U2 (RG 316/U)	single	3005	
21_BNC-50-3-12/133_NE	**22540263**	U7, 10 (RG 58C/U)	single	3005	

Cable groups see page 28 | Assembly tools see page 385 | Mounting holes see page 412

> for flexible cables

> HUBER+SUHNER® full crimp

> taper sleeves see page 406

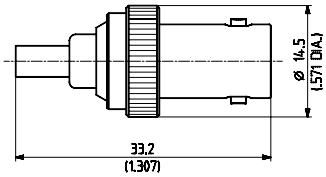

Fig. 1

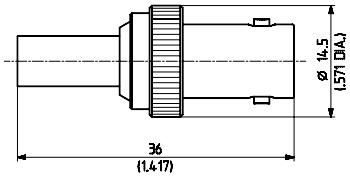

Fig. 2

HUBER+SUHNER type	Item no.	Cable group (example)	Packaging	Assembly instruction	Crimp insert	Fig.
21_BNC-50-1-4/133_NE	**22641777**	U1 (RG 178 B/U)	single	9068	1 A	1
21_BNC-50-2-9/133_NE	**22641732**	U2 (RG 316/U)	single	9068	1 A	1
21_BNC-50-2-10/133_NE	**22641779**	U4 (K 02252 D)	single	9068	1 A	1
21_BNC-50-3-2/133_NE	**22540242**	U7 (RG 58 C/U)	single	3015	2 B	2
21_BNC-50-3-9/133_NE	**22540255**	U9 (RG 223/U)	single	3015	2 B	2

Straight bulkhead cable jacks (female)

> for semi-rigid cables

> cable entry soldered

> insulating washers see page 408

> with panel seal

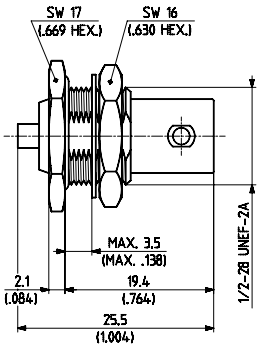

Fig. 1

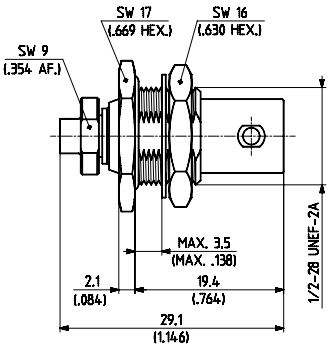

Fig. 2

HUBER+SUHNER type	Item no.	Cable group (example)	Packaging	Assembly instruction	Mounting hole	Fig.
24_BNC-50-2-20/133_NE	**22641886**	Y3, Y11 (EZ 86)	single	9100	ML 4	1
24_BNC-50-3-33/133_NE	**22641923**	Y5, Y12 (EZ 141)	single	9005	ML 4	2

Cable groups see page 28 | Assembly tools see page 385 | Mounting holes see page 412

> for flexible cables

> cable entry clamp

> with panel seal

> insulating washers see page 408

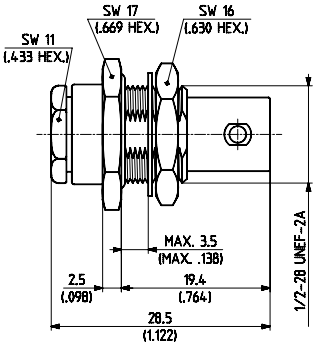

HUBER+SUHNER type	Item no.	Cable group (example)	Packaging	Assembly instruction	Mounting hole
24_BNC-50-1-1/133_NE	**22540362**	U1 (RG 178 B/U)	single	3005	ML 4
24_BNC-50-2-1/133_NE	**22540365**	U2 (RG 316/U)	single	3005	ML 4
24_BNC-50-3-5/133_NE	**22540385**	U7, 10 (RG 58C/U)	single	3005	ML 4

> for flexible cables

> HUBER+SUHNER® full crimp

> with panel seal

> insulating washers see page 408

> taper sleeves see page 406

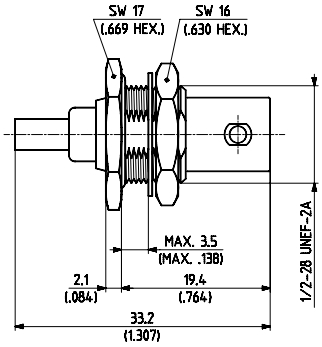

Fig. 1

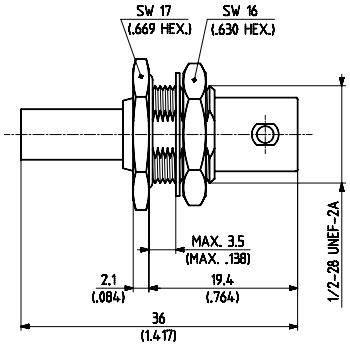

Fig. 2

HUBER+SUHNER type	Item no.	Cable group (example)	Packaging	Assembly instruction/ Mounting hole	Crimp insert	Fig.
24_BNC-50-1-6/133_NE	**22641781**	U1 (RG 178 B/U)	single	9068 / ML 4	1 A	1
24_BNC-50-1-6/133_NH	**84011438**	U1 (RG 178 B/U)	bulk 100 pcs.	9068 / ML 4	1 A	1
24_BNC-50-2-13/133_NE	**22641731**	U2 (RG 316/U)	single	9068 / ML 4	1 A	1
24_BNC-50-2-13/133_NH	**22645373**	U2 (RG 316/U)	bulk 100 pcs.	9068 / ML 4	1 A	1
24_BNC-50-2-14/133_NE	**22641783**	U4 (K 02252 D)	single	9068 / ML 4	1 A	1
24_BNC-50-2-14/133_NH	**22652154**	U4 (K 02252 D)	bulk 100 pcs.	9068 / ML 4	1 A	1
24_BNC-50-3-1/133_NE	**22540378**	U7 (RG 58 C/U)	single	3015 / ML 4	2 B	2
24_BNC-50-3-8/133_NE	**22540389**	U9 (RG 223/U)	single	3015 / ML 4	2 B	2
24_BNC-50-3-25/133_NE	**22658913**	U11 (RG 400/U)	single	3015 / ML 4	2 B	2
24_BNC-50-3-25/133_NH	**22660362**	U11 (RG 400/U)	bulk 100 pcs.	3015 / ML 4	2 B	2

Cable groups see page 28 Assembly tools see page 385 Mounting holes see page 412

> for flexible cables

> HUBER+SUHNER® full crimp

> taper sleeves see page 406

> front mounting

> without panel seal

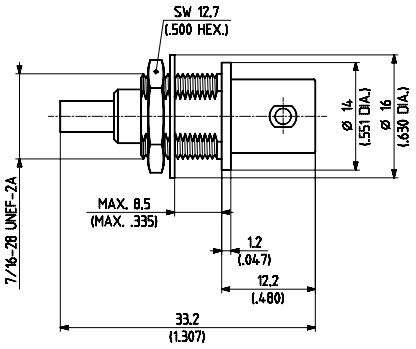

HUBER+SUHNER type	Item no.	Cable group (example)	Packaging	Assembly instruction/ Mounting hole	Crimp insert
24_BNC-50-2-29/133_NE	**22648682**	U2 (RG 316/U)	single	9068 / ML 3	1 A

> for flexible cables

> HUBER+SUHNER® full crimp

> with panel seal

> insulating washers see page 408

> taper sleeves see page 406

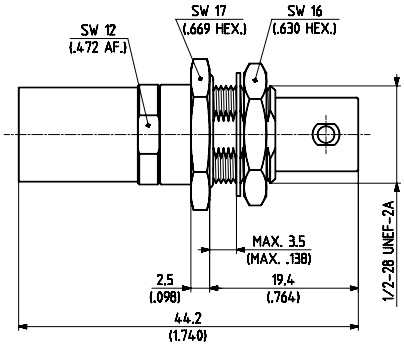

HUBER+SUHNER type	Item no.	Cable group (example)	Packaging	Assembly instruction/ Mounting hole	Crimp insert
24_BNC-50-7-3/133_NE	**22540415**	U29 (RG 213/U)	single	9121 / ML 4	3 D

Cable groups see page 28 Assembly tools see page 385 Mounting holes see page 412

Straight panel cable jacks (female)

> for flexible cables

> HUBER+SUHNER® full crimp

> fastening screws see page 407

> taper sleeves see page 406

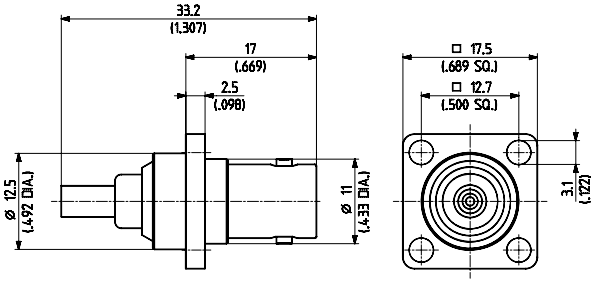

Fig. 1

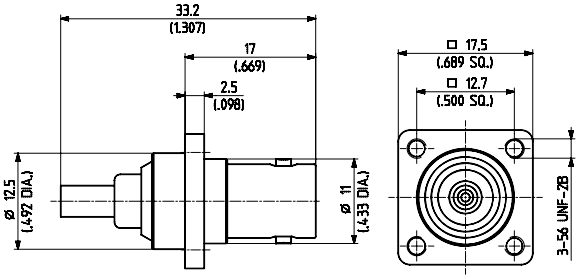

Fig. 2

HUBER+SUHNER type	Item no.	Cable group (example)	Packaging	Assembly instruction/ Mounting hole	Crimp insert	Fig.
25_BNC-50-2-13/133_NE	**22641919**	U2 (RG 316/U)	single	9068 / ML 8	1 A	2*
25_BNC-50-2-14/133_NE	**22641924**	U2 (RG 316/U)	single	9068 / ML 8	1 A	1
25_BNC-50-2-16/133_NE	**22641795**	U4 (K 02252 D)	single	9068 / ML 8	1 A	1

* mounting also possible with screws ISO M 2.5

> for flexible cables

> HUBER+SUHNER® full crimp

> fastening screws see page 407

> taper sleeves see page 406

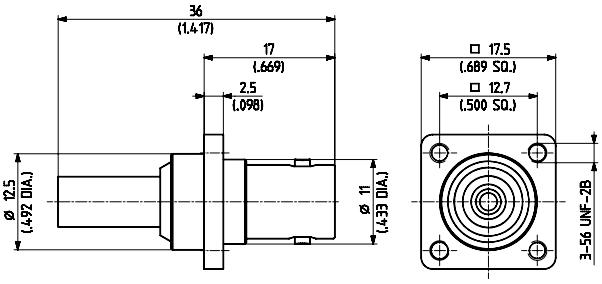

HUBER+SUHNER type	Item no.	Cable group (example)	Packaging	Assembly instruction/ Mounting hole	Crimp insert	Notes
25_BNC-50-3-13/133_NE	**22540463**	U7 (RG 58 C/U)	single	3015 / ML 8	2 B	*

* mounting also possible with screws ISO M 2.5

Cable groups see page 28 Assembly tools see page 385 Mounting holes see page 412

RECEPTACLES WITH SOLDER END

Receptacles, plugs (male)

> bulkhead mounted
> insulating washers see page 408
> solder tags see page 409

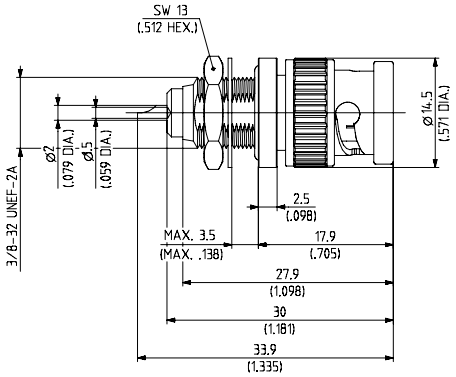

HUBER+SUHNER type	Item no.	Packaging	Mounting hole	Panel thickness	Notes
12_BNC-50-0-1/133_NE	**22540154**	single	ML 2	max. 3.5 mm	with panel seal

Receptacles, jacks (female)

> bulkhead mounted
> insulating washers see page 408
> solder tags see page 409

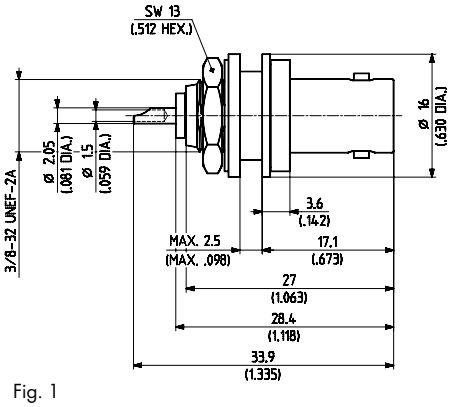

Fig. 1

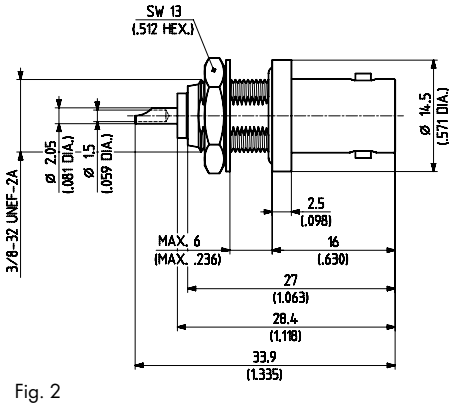

Fig. 2

HUBER+SUHNER type	Item no.	Packaging	Mounting hole	Fig.	Notes
22_BNC-50-0-2/133_NE	**22540293**	single	ML 102	1	insulated mounting / *
22_BNC-50-0-3/133_NE	**22540301**	single	ML 1	2	with panel seal
22_BNC-50-0-3/133_NH	**22645500**	bulk 100 pcs.	ML 1	2	with panel seal

* equipped with insulating washers 77_Z-0-0-2 (not protected against rotation)

Cable groups see page 28 | Assembly tools see page 385 | Mounting holes see page 412

Receptacles, jacks (female)

> bulkhead mounted
> insulating washers see page 408
> solder tags see page 409

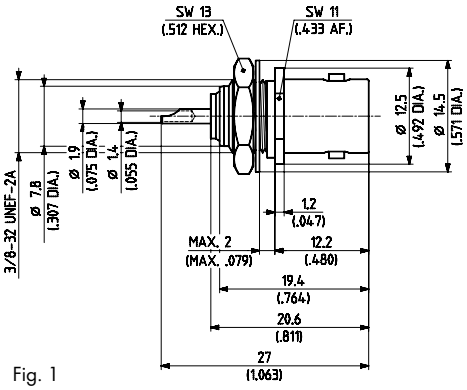

Fig. 1

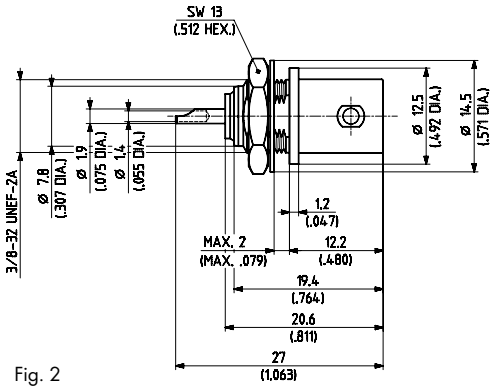

Fig. 2

H+S type	Item no.	Packaging	Mounting hole	Fig.	Notes
22_BNC-50-0-4/133_NE	**22540303**	single	ML 3	1	not suitable for insulated mounting
22_BNC-50-0-5/133_NE	**22540308**	single	ML 2	2	suitable for insulated mounting
22_BNC-50-0-5/133_NH	**22650242**	bulk 100 pcs.	ML 2	2	suitable for insulated mounting

> bulkhead mounted
> insulating washers see page 408
> solder tags see page 409

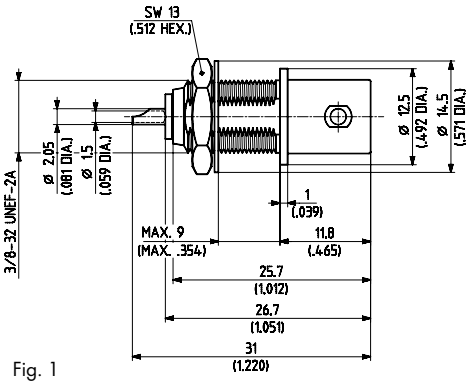

Fig. 1

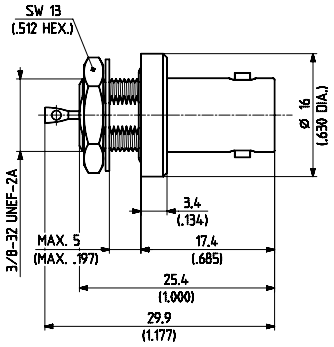

Fig. 2

H+S type	Item no.	Packaging	Mounting hole	Fig.	Notes
22_BNC-50-0-16/133_NE	**22540314**	single	ML 2	1	suitable for insulated mounting
22_BNC-50-0-24/100_NE**	**22540321**	single	ML 2	2	hermetically sealed / body silver plated*

* leak rate 10^{-6} Torr l/sec.(*atm cc/s*) max.
** RoHS compliant alternative on request

Cable groups see page 28 | Assembly tools see page 385 | Mounting holes see page 412

Receptacles, plugs (male)

> panel mounted

> fastening screws see page 407

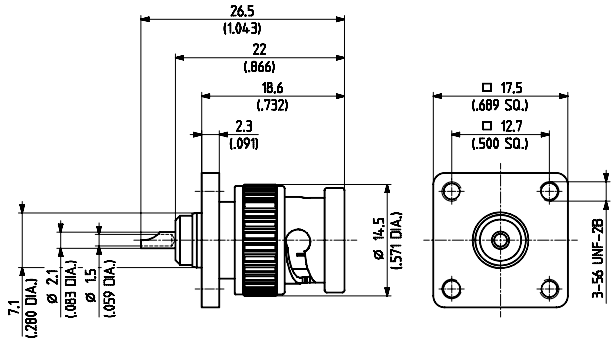

HUBER+SUHNER type	Item no.	Packaging	Mounting hole	Notes
13_BNC-50-0-1/133_NE	**22543470**	single	ML 6	mounting also possible with screws ISO M 2.5

> panel mounted

> fastening screws see page 407

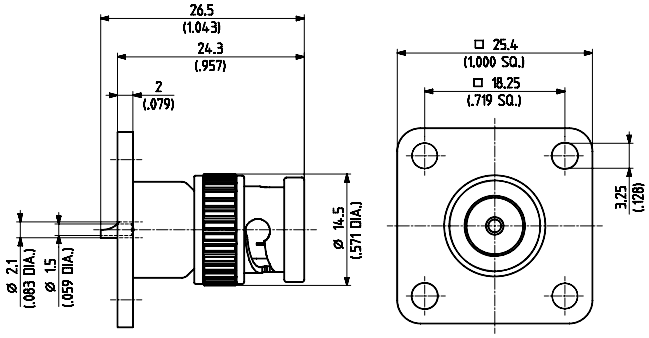

HUBER+SUHNER type	Item no.	Packaging	Mounting hole	Notes
13_BNC-50-0-2/133_NE	**22540160**	single	ML 5	suitable for SUCOBOX® applications, see page 410

Receptacles, jacks (female)

> panel mounted

> fastening screws see page 407

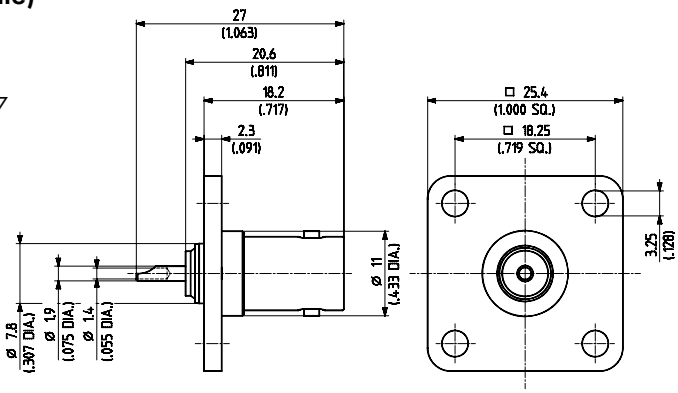

HUBER+SUHNER type	Item no.	Packaging	Mounting hole	Notes
23_BNC-50-0-2/133_NE	**22540333**	single	ML 5	suitable for SUCOBOX® applications, see page 410

Cable groups see page 28 | Assembly tools see page 385 | Mounting holes see page 412

> panel mounted

> fastening screws see page 407

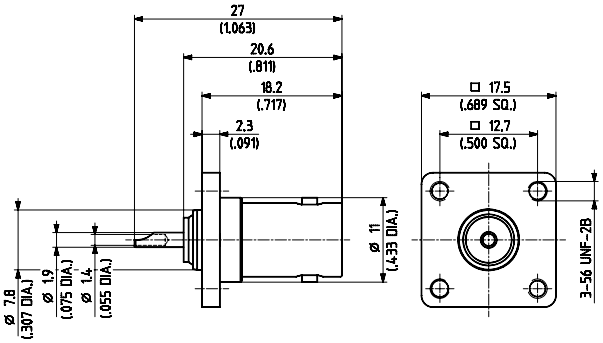

HUBER+SUHNER type	Item no.	Packaging	Mounting hole	Notes
23_BNC-50-0-12/133_NE	**22540349**	single	ML 6	mounting also possible with screws ISO M 2.5

> panel mounted

> fastening screws see page 407

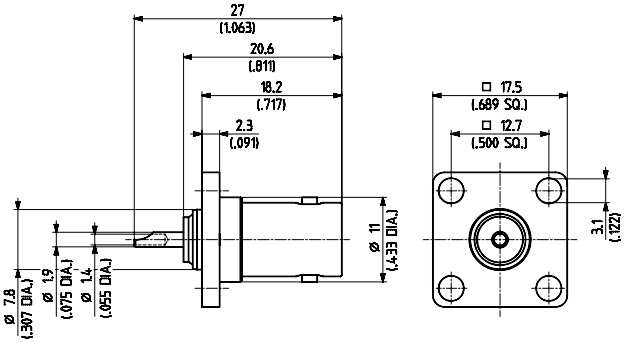

HUBER+SUHNER type	Item no.	Packaging	Mounting hole	Notes
23_BNC-50-0-16/133_NE	**22540355**	single	ML 6	

Right angle receptacles, jack (female)

> bulkhead mounted

> with panel seal

> insulating washers see page 408

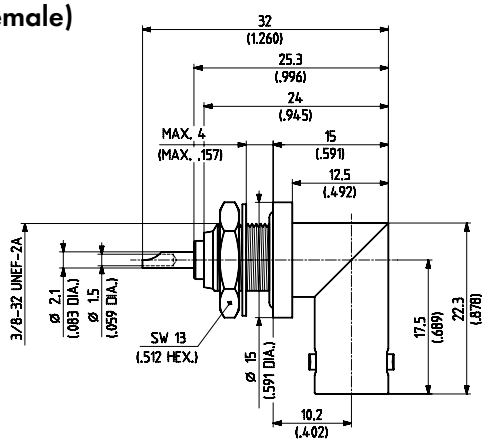

HUBER+SUHNER type	Item no.	Packaging	Mounting hole	Notes
27_BNC-50-0-1/133_NE	**22540492**	single	ML 2	

Cable groups see page 28 | Assembly tools see page 385 | Mounting holes see page 412

Right angle receptacles, jack (female)

> panel mounted

> fastening screws see page 407

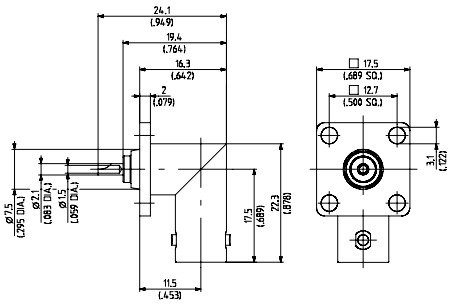

HUBER+SUHNER type	Item no.	Packaging	Mounting hole	Notes
28_BNC-50-0-2/133_NE	**22540500**	single	ML 6	fastening hole d = 3.1 mm / *.12 in.*

PCB CONNECTORS

Straight PCB jacks (female)

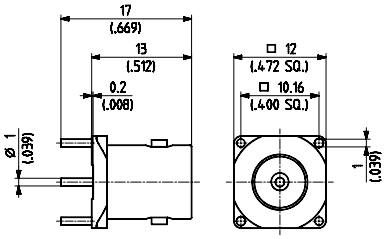

HUBER+SUHNER type	Item no.	Packaging	Mounting hole	Notes
82_BNC-50-0-1/133_NE	**22645779**	single	ML 49	
82_BNC-50-0-1/133_NH	**22543974**	bulk 100 pcs.	ML 49	
82_BNC-50-0-1/111_NH	**23012124**	bulk 100 pcs.	ML 49	Plating body: SUCOPRO

Right angle PCB jacks (female)

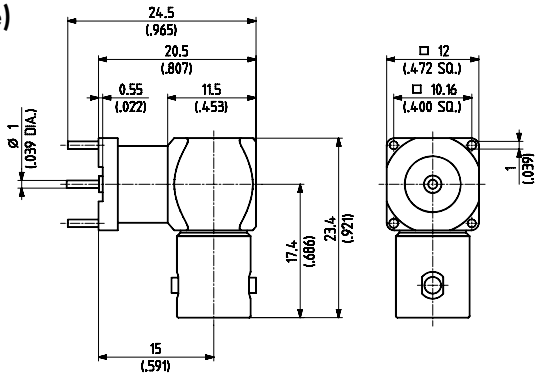

HUBER+SUHNER type	Item no.	Packaging	Mounting hole	Notes
85_BNC-50-0-1/133_NE	**22540736**	single	ML 49	
85_BNC-50-0-1/111_NE	**23022540**	single	ML 49	Plating body: SUCOPRO

Cable groups see page 28 Assembly tools see page 385 Mounting holes see page 412

PROTECTIVE CAPS AND SHORTS

> protective cap for plugs (males)

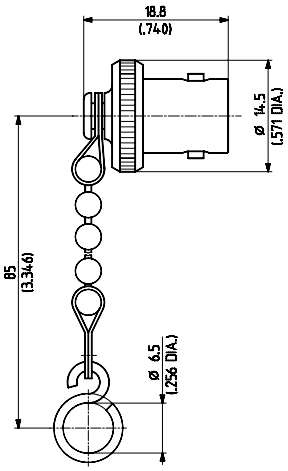

HUBER+SUHNER type	Item no.	Packaging	Notes
61_BNC-0-0-1/-33_-E	**22540660**	single	with chain and loop

> for jacks (females)

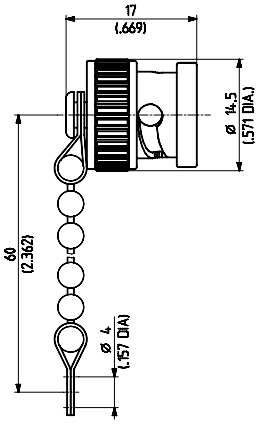

HUBER+SUHNER type	Item no.	Packaging	Notes
62_BNC-0-0-1/-33_-E	**22540666**	single	protective cap with chain
64_BNC-50-0-1/133_NE	**22540681**	single	short circuit with chain

> protective caps for jacks (females)

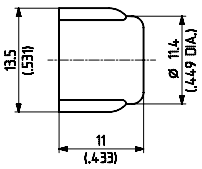

Fig. 1

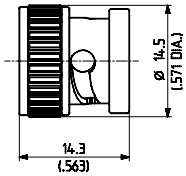

Fig. 2

HUBER+SUHNER type	Item no.	Packaging	Fig.	Notes
62_BNC-0-0-2/—_-H	**22540667**	bulk 100 pcs.	1	made of plastic
62_BNC-0-0-3/-33_-E	**22540669**	single	2	

Cable groups see page 28 Assembly tools see page 385 Mounting holes see page 412

SERIES BNC 75 Ω, COAXIAL MINIATURE CONNECTORS

DESCRIPTION

HUBER+SUHNER BNC Series featuring a two stud bayonet coupling mechanism which is particularly useful for frequently coupled and uncoupled RF connections. At frequencies up to 1 GHz the small impedance deviation is negligible for any application. A typical VSWR of 1.15 at 1 GHz is achieved.

Compatibility

75 Ω BNC connectors and 50 Ω BNC connectors are intermateable without any restrictions.

CONTENTS PAGE

INTERFACE DIMENSIONS

Plug (male)

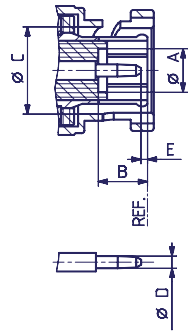

Jack (female)

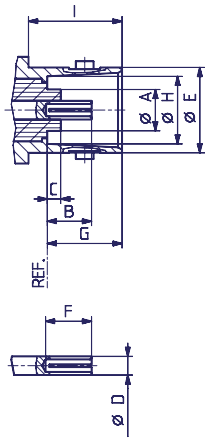

INTERFACE DIMENSIONS (MM / *INCHES*)

	Plug		Jack	
	min.	max.	min.	max.
A	4.83/.190	4.97/.196	–	4.72/.186
B	5.28/.208	5.79/.228	4.72/.186	5.23/.206
C	9.78/.385	9.91/.390	1.50/.059 nom.	
D	1.32/.052	1.37/.054	2.10/.827 nom.	
E	0.08/.003	1.02/.040	9.60/.378	9.70/.382
F		–	4.95/.195	–
G		–	8.35/.328	8.48/.334
H	–	–	8.10/.319	8.15/.321
I	–	–	10.60/.417	–

Interface dimensions conformable to the Standards:

International: **IEC 61169-8**

IP rating (interface, mated) IP64

TECHNICAL DATA

ELECTRICAL DATA	REQUIREMENTS
Impedance	75 Ω
Frequency range	DC ... 1 GHz
Dielectric withstanding voltage (at sea level)	1.5 kV rms, 50 Hz (depending on cable)
Working voltage (at sea level)	500 V rms, 50 Hz (depending on cable)
Insulation resistance	≥ $5 \cdot 10^3$ MΩ
Contact resistance - centre contact - outer contact	 ≤ 1.5 mΩ ≤ 1 mΩ
RF-leakage (measured at 1 GHz)	≥ 55 dB

MECHANICAL DATA	REQUIREMENTS
Coupling nut torque	7 Ncm ... 28 Ncm / *0.6 in. lbs ... 2.5 in. lbs*
Coupling nut retention force	≥ 450 N / *101.2 lbs*
Contact captivation	≥ 27 N / *6.1 lbs*
Cable retention force[1)]	see pages 28 – 34
Durability (matings)	≥ 500

1) Value considers maximum load of the cables without irreversible variations of specifications.

ENVIRONMENTAL DATA	TEST CONDITIONS
Temperature range	– 65°C ... + 165°C / – 85 °F ... + 329 °F
Climatic category	IEC → 55/155/21
Thermal shock	MIL-STD-202, Method 107, Condition B
Moisture resistance	MIL-STD-202, Method 106
Corrosion	Saltspray test acc. to MIL-STD-202, Method 101, Condition B
Vibration	MIL-STD-202, Method 204, Condition B
Shock	MIL-STD-202, Method 213, Condition G

MATERIAL DATA		
CONNECTOR PARTS	**MATERIAL**	**PLATING**
Bodies	brass	SUCOPLATE®
Pin contacts	brass	gold / SUCOPRO
Socket contacts	copper-beryllium alloy	gold / SUCOPRO
Crimp ferrules	copper brass	SUCOPLATE®
Insulators	PTFE or PFA	
Gaskets	silicone rubber	

Some connectors may have a specification that differs from the above mentioned data.

The products are designed and guaranteed to pass the above mentioned test procedures. Any additional or different requirement arising from specific applications or environmental conditions which is not covered by these test procedures is subject to request.

CABLE CONNECTORS

Straight cable plugs (male)

> for flexible cables

> cable entry clamp

> centre contact soldered

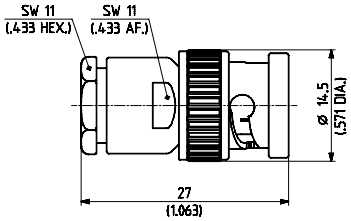

HUBER+SUHNER type	Item no.	Cable group (example)	Packaging	Assembly instruction	Notes
11_BNC-75-2-1/133_NE	**22543768**	U5 (RG 187 A/U)	single	3005	
11_BNC-75-2-12/133_NE	**22544277**	U6 (G 03133-06)	single	3005	

> for flexible cables

> cable entry clamp

> centre contact soldered

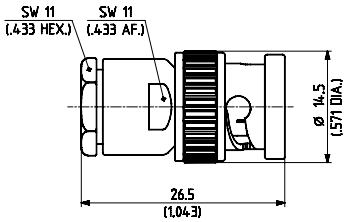

HUBER+SUHNER type	Item no.	Cable group (example)	Packaging	Assembly instruction	Notes
11_BNC-75-3-11/133_NE	**22540711**	U14 (G 03233 D)	single	3005	
11_BNC-75-4-3/133_NE	**22540758**	U15 (RG 59 B/U)	single	3005	

Cable groups see page 28 Assembly tools see page 385 Mounting holes see page 412

> for flexible cables

> HUBER+SUHNER® full crimp

> taper sleeves see page 406

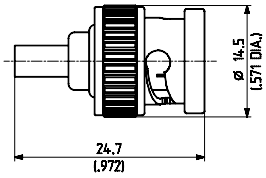

Fig. 1

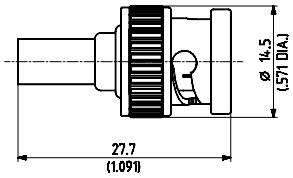

Fig. 2

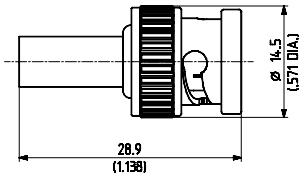

Fig. 3

HUBER+SUHNER type	Item no.	Cable group (example)	Packaging	Assembly instruction	Crimp insert	Fig.
11_BNC-75-2-15/133_NE	**22641685**	U5 (RG 187 A/U)	single	9068	1 A	1
11_BNC-75-2-15/133_NH	**22644586**	U5 (RG 187 A/U)	bulk 100 pcs.	9068	1 A	1
11_BNC-75-2-18/133_NE	**22643710**	S5 (S 02223-02)	single	9068	1 A	1
11_BNC-75-2-18/133_NH	**22644587**	S5 (S 02223-02)	bulk 100 pcs.	9068	1 A	1
11_BNC-75-2-21/133_NE	**22644358**	R6 (G 02133 D-05)	single	27001	1/4.95	2
11_BNC-75-2-21/133_NH	**22650676**	R6 (G 02133 D-05)	bulk 100 pcs.	27001	1/4.95	2
11_BNC-75-3-8/133_NE	**22540707**	U12 (G 03233)	single	3015	2 B	3
11_BNC-75-3-9/133_NE	**22540709**	U14 (G 03233 D)	single	3015	2 B	3
11_BNC-75-4-4/133_NE	**22540761**	U16 (RG 59 B/U)	single	3015	2 C	3
11_BNC-75-4-4/133_NH	**22544846**	U16 (RG 59 B/U)	bulk 100 pcs.	3015	2 C	3
11_BNC-75-4-6/133_NE	**22540765**	U18 (G 04233 D)	single	3015	2 C	3
11_BNC-75-4-6/133_NH	**22540766**	U18 (G 04233 D)	bulk 100 pcs.	3015	2 C	3
11_BNC-75-4-30/133_NE	**22544636**	U17 (S 04233)	single	3015	2 C	3
11_BNC-75-5-6/133_NE	**22540799**	U24 (G 05133 D)	single	3015	76_Z-0-5-21	3

> for flexible cables

> HUBER+SUHNER® full crimp

> taper sleeves see page 406

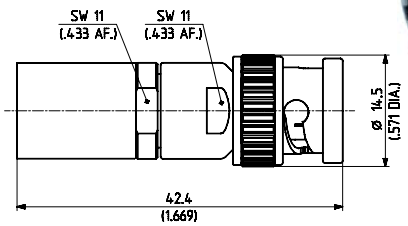

HUBER+SUHNER type	Item no.	Cable group (example)	Packaging	Assembly instruction	Crimp insert
11_BNC-75-7-5/133_NE	**22540811**	U34 (RG 11 A/U)	single	9120	2 D
11_BNC-75-7-6/133_NE	**22543960**	U36 (RG 216/U)	single	9120	2 D

Cable groups see page 28 Assembly tools see page 385 Mounting holes see page 412

Right angle cable plugs (male)

> for flexible cables

> cable entry crimp

> centre contact soldered

> taper sleeves see page 406

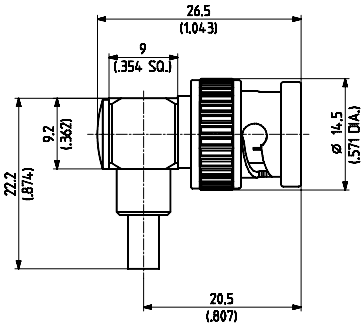

Fig. 1

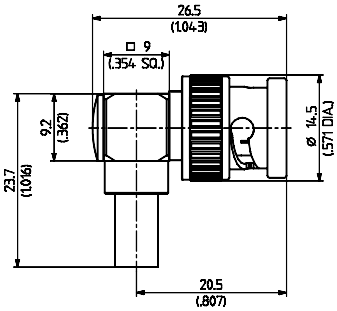

Fig. 2

HUBER+SUHNER type	Item no.	Cable group (example)	Packaging	Assembly instruction	Crimp insert	Fig.
16_BNC-75-2-3/133_NE	**22540820**	U5 (RG 187 A/U)	single	3079	A	1
16_BNC-75-2-3/133_NH	**22649038**	U5 (RG 187 A/U)	bulk 100 pcs.	3079	A	1
16_BNC-75-2-5/133_NE	**22642801**	R6 (G 02133 D-05)	single	27100	4.95	2

> for flexible cables

> cable entry crimp

> centre contact soldered

> taper sleeves see page 406

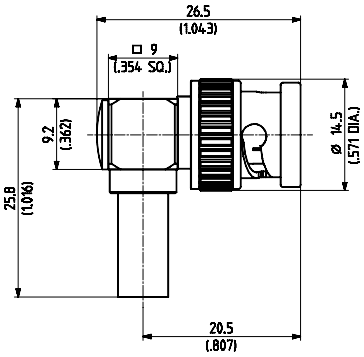

HUBER+SUHNER type	Item no.	Cable group (example)	Packaging	Assembly instruction	Crimp insert
16_BNC-75-3-4/133_NE	**22543781**	U14 (G 03233 D)	single	3058	B
16_BNC-75-4-4/133_NE	**22540840**	U16 (RG 59 B/U)	single	3058	C
16_BNC-75-4-5/133_NE	**22540842**	U18 (G 04233 D)	single	3058	C

Cable groups see page 28 Assembly tools see page 385 Mounting holes see page 412

Straight cable jacks (female)

> for flexible cables

> HUBER+SUHNER® full crimp

> taper sleeves see page 406

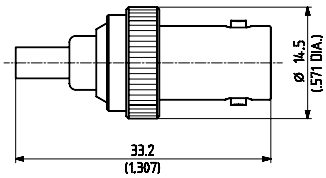

Fig. 1

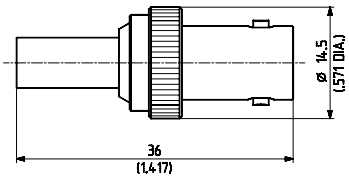

Fig. 2

HUBER+SUHNER type	Item no.	Cable group (example)	Packaging	Assembly instruction	Crimp insert	Fig.
21_BNC-75-2-5/133_NE	**22641780**	U5 (RG 187 A/U)	single	9068	1 A	1
21_BNC-75-2-5/133_NH	**22645904**	U5 (RG 187 A/U)	bulk 100 pcs.	9068	1 A	1
21_BNC-75-2-7/133_NE	**22643853**	S5 (S 02223-02)	single	9068	1 A	1
21_BNC-75-4-4/133_NE	**22540872**	U16 (RG 59 B/U)	single	3015	2 C	2
21_BNC-75-4-5/133_NE	**22540874**	U18 (G 04233 D)	single	3015	2 C	2

Straight bulkhead cable jacks (female)

> for flexible cables

> HUBER+SUHNER® full crimp

> with panel seal

> insulating washers see page 408

> taper sleeves see page 406

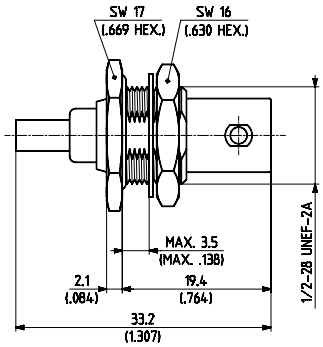

HUBER+SUHNER type	Item no.	Cable group (example)	Packaging	Assembly instruction	Crimp insert
24_BNC-75-2-6/133_NE	**22641786**	U5 (RG 187 A/U)	single	9068	1 A
24_BNC-75-2-6/133_NH	**22644569**	U5 (RG 187 A/U)	bulk 100 pcs.	9068	1 A
24_BNC-75-2-12/133_NE	**22643854**	S5 (S 02223-02)	single	9068	1 A

mounting hole ML 4

Cable groups see page 28 | Assembly tools see page 385 | Mounting holes see page 412

> for flexible cables

> HUBER+SUHNER® full crimp

> with panel seal

> insulating washers see page 408

> taper sleeves see page 406

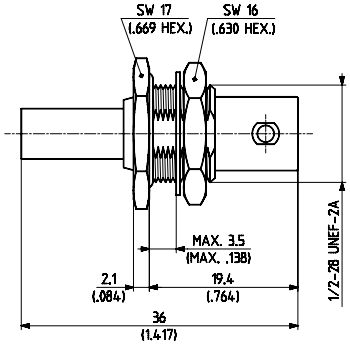

HUBER+SUHNER type	Item no.	Cable group (example)	Packaging	Assembly instruction	Crimp insert
24_BNC-75-2-15/133_NE	**22644339**	R6 (G 02133 D-05)	single	27001	1 / 4.95
24_BNC-75-2-15/133_NH	**22651492**	R6 (G 02133 D-05)	bulk 100 pcs.	27001	1 / 4.95
24_BNC-75-3-4/133_NE	**22540917**	U12 (G 03233)	single	3015	2 B
24_BNC-75-3-5/133_NE	**22540920**	U14 (G 03233 D)	single	3015	2 B
24_BNC-75-4-3/133_NE	**22540930**	U16 (RG 59 B/U)	single	3015	2 C
24_BNC-75-4-4/133_NE	**22540932**	U18 (G 04233 D)	single	3015	2 C
24_BNC-75-4-15/133_NE	**22641769**	U17 (S 04233)	single	3015	2 C

mounting hole ML 4

Straight panel cable jacks (female)

> for flexible cables

> HUBER+SUHNER® full crimp

> fastening screws see page 407

> taper sleeves see page 406

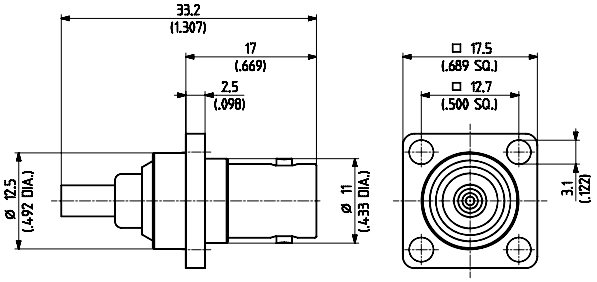

Fig. 1

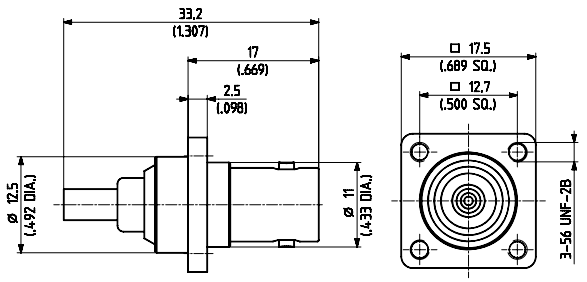

Fig. 2

HUBER+SUHNER type	Item no.	Cable group (example)	Packaging	Assembly instruction	Crimp insert	Fig.
25_BNC-75-2-7/133_NE	**22641790**	U5 (RG 187 A/U)	single	9068	1 A	1
25_BNC-75-2-8/133_NE	**22641791**	U5 (RG 187 A/U)	single	9068	1 A	2*

* mounting also possible with screws ISO M 2.5

mounting hole ML 8

Cable groups see page 28 Assembly tools see page 385 Mounting holes see page 412

RECEPTACLES WITH SOLDER END

Receptacles, jacks (female)

> bulkhead mounted
> with panel seal
> solder tags see page 409
> insulating washers see page 408

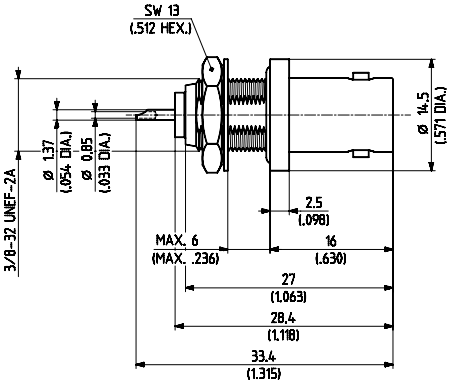

HUBER+SUHNER type	Item no.	Packaging	Mounting hole	Notes
22_BNC-75-0-1/133_NE	**22540883**	single	ML 1	

> bulkhead mounted
> solder tags see page 409
> insulating washers see page 408

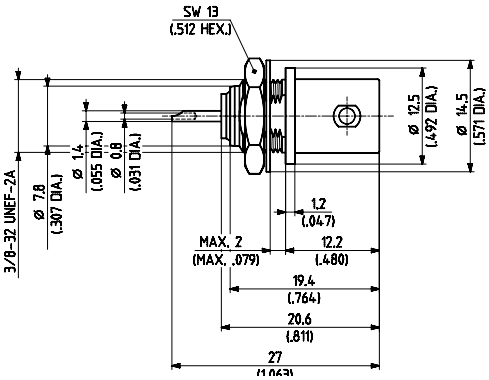

HUBER+SUHNER type	Item no.	Packaging	Mounting hole	Notes
22_BNC-75-0-4/133NE	**22540889**	single	ML 2	without panel seal

> panel mounted
> fastening screws see page 407

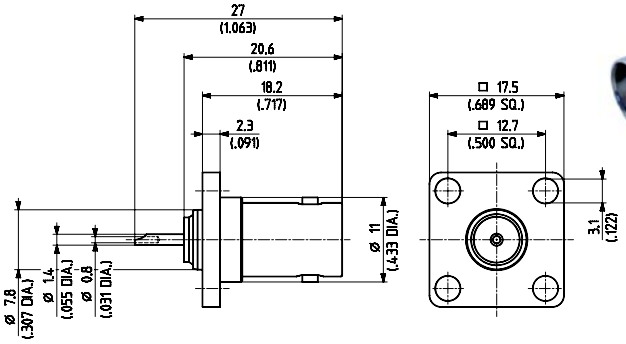

HUBER+SUHNER type	Item no.	Packaging	Mounting hole	Notes
23_BNC-75-0-10/133_NE	**22540906**	single	ML 6	

Cable groups see page 28 | Assembly tools see page 385 | Mounting holes see page 412

PCB CONNECTORS

Straight PCB jacks (female)

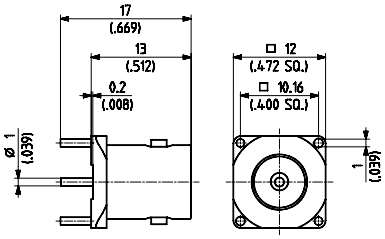

HUBER+SUHNER type	Item no.	Packaging	Mounting hole	Notes
82_BNC-75-0-2/122_NE	**22643586**	single	ML 49	Plating Body: nickel
82_BNC-75-0-2/122_NH	**22646624**	bulk 100 pcs.	ML 49	Plating Body: nickel

Right angle PCB jacks (female)

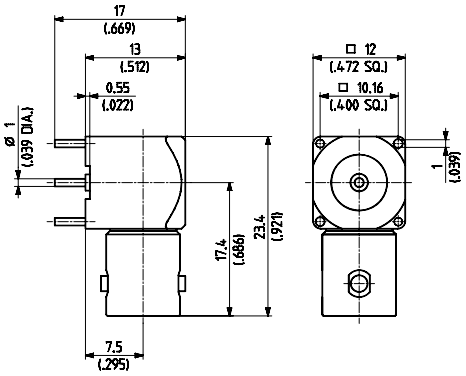

HUBER+SUHNER type	Item no.	Packaging	Mounting hole	Notes
85_BNC-75-0-1/133_NE	**22641623**	single	ML 49	
85_BNC-75-0-1/133_NH	**22646488**	bulk 100 pcs.	ML 49	

Cable groups see page 28 Assembly tools see page 385 Mounting holes see page 412

PROTECTIVE CAPS AND SHORTS

> protective cap for plugs (males)

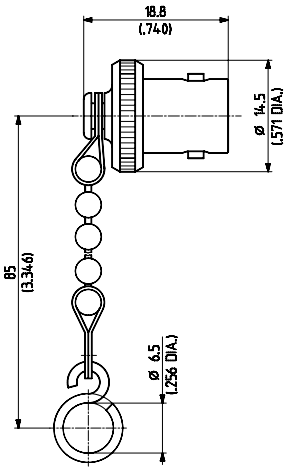

HUBER+SUHNER type	Item no.	Packaging	Notes
61_BNC-0-0-1/-33_-E	**22540660**	single	with chain and loop

> protective cap for jacks (females)

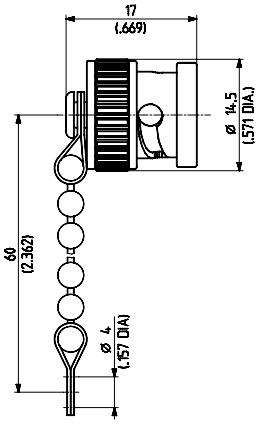

HUBER+SUHNER type	Item no.	Packaging	Notes
62_BNC-0-0-1/-33_-E	**22540666**	single	with chainp

> protective caps for jacks (females)

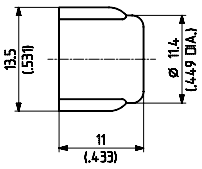

Fig. 1

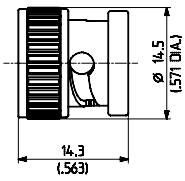

Fig. 2

HUBER+SUHNER type	Item no.	Packaging	Fig.	Notes
62_BNC-0-0-2/—_-H	**22540667**	bulk 100 pcs.	1	made of plastic
62_BNC-0-0-3/-33_-E	**22540669**	single	2	

Cable groups see page 28 Assembly tools see page 385 Mounting holes see page 412

A FURTHER HUBER+SUHNER PRODUCT GROUP!

RF and microwave components

Details on this product range are to be found in the brochure ,
Item no. 23038050. Get your copy free of charge at
www.hubersuhner.com.

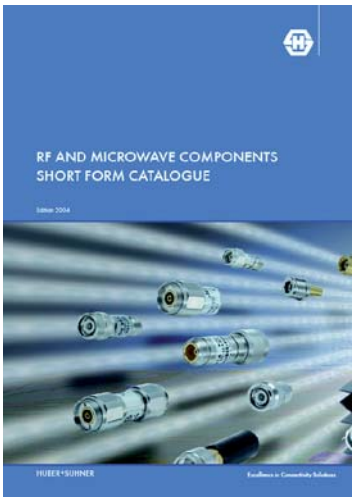

SERIES TNC 50 Ω, COAXIAL MINIATURE CONNECTORS

DESCRIPTION

HUBER+SUHNER TNC connectors are threaded RF connectors applicable from DC up to 11 GHz. Precision designs using a dielectric bead are suitable for use up to 18 GHz. The threaded coupling mechanism improves control over the interface dimensions and allows them to be used under a higher environmental load than BNC, especially under a high vibration load.

Compatibility

50 Ω TNC connectors and 75 Ω TNC connectors are intermateable without restrictions.

CONTENTS

PAGE

INTERFACE DIMENSIONS

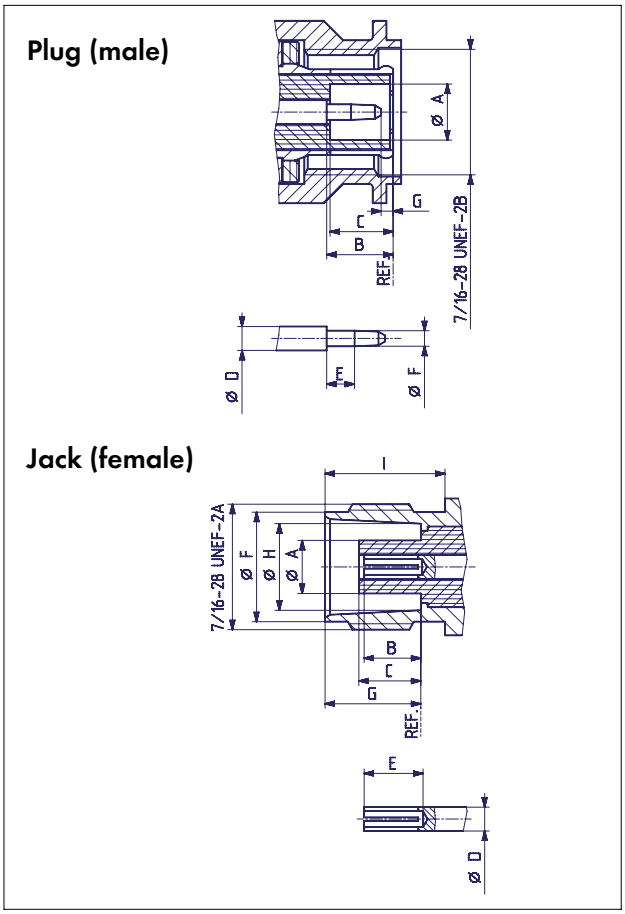

INTERFACE DIMENSIONS (MM / *INCHES*)

	Plug		Jack	
	min.	max.	min.	max.
A	4.83/.190	–	–	4.72/.186
B	5.33/.210	5.84/.230	4.72/.186	5.23/.206
C	5.28/.208	5.79/.228	4.78/.188	5.28/.208
D	2.06/.081	2.21/.087	2.06/.081	2.21/.087
E	1.98/.078	–	4.95/.195	–
F	1.32/.052	1.37/.054	9.60/.378	9.70/.382
G	0.08/.003	–	8.31/.327	8.51/.335
H	–	–	8.10/.319	8.15/.321
I	–	–	10.52/.414	–

Interface dimensions conformable to the Standards:

International: **IEC 60169-17**
Europe: **CECC 22 200**
USA: **MIL-C-39012**
TNC-Interface MIL-STD-348A/313

IP rating (interface, mated) IP68

TNC

TECHNICAL DATA

ELECTRICAL DATA	REQUIREMENTS
Impedance	50 Ω
Frequency range	DC ... 11 GHz
Dielectric withstanding voltage (at sea level)	1.5 kV rms, 50 Hz (depending on cable)
Working voltage (at sea level) - unmated	500 V rms, 50 Hz (depending on cable)
Insulation resistance	≥ $5 \cdot 10^3$ MΩ
Contact resistance - centre contact - outer contact	 ≤ 1.5 mΩ ≤ 1 mΩ
RF-leakage (between 2 ÷ 3 GHz)	≥ 60 dB

MECHANICAL DATA	REQUIREMENTS
Coupling nut torque - recommended - proof torque	 46 Ncm ... 69 Ncm / *4.1 in. lbs ... 6.1 in. lbs* 170 Ncm / *15.0 in. lbs*
Coupling nut retention force	≥ 450 N / *101.2 lbs*
Contact captivation	≥ 27 N / *6.1 lbs*
Cable retention force[1)]	see pages 28 – 34
Durability (matings)	≥ 500

1) Value considers maximum load of the cables without irreversible variations of specifications.

ENVIRONMENTAL DATA	TEST CONDITIONS
Temperature range	– 65°C ... + 165°C / – 85 °F ... + 329 °F
Climatic category	IEC → 55/155/21
Thermal shock	MIL-STD-202, Method 107, Condition B
Moisture resistance	MIL-STD-202, Method 106
Corrosion	Saltspray test acc. to MIL-STD-202, Method 101, Condition B
Vibration	MIL-STD-202, Method 204, Condition B
Shock	MIL-STD-202, Method 213, Condition G

MATERIAL DATA		
CONNECTOR PART	**MATERIAL**	**PLATING**
Bodies	brass	SUCOPLATE®
Pin contacts	brass	gold / SUCOPRO
Socket contacts	copper-beryllium alloy copper alloy	gold / SUCOPRO
Crimp ferrules	copper brass	SUCOPLATE®
Insulators	PTFE or PFA	
Gaskets	silicone rubber	

Some connectors may have a specification that differs from the above mentioned data.

The products are designed and guaranteed to pass the above mentioned test procedures. Any additional or different requirement arising from specific applications or environmental conditions which is not covered by these test procedures is subject to request.

CABLE CONNECTORS

Straight cable plugs (male)

> for semi-rigid cables

> cable entry soldered

> centre contact soldered

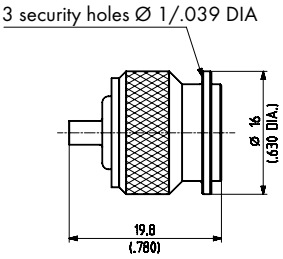

Fig. 1

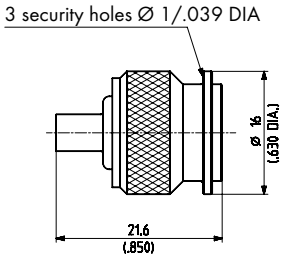

Fig. 2

HUBER+SUHNER type	Item no.	Cable group (example)	Packaging	Assembly instruction	Fig.	Notes
11_TNC-50-2-20/103_NE ⊞	**22642519**	Y3, Y11 (EZ 86)	single	9100	1	
11_TNC-50-3-29/103_NE ⊞	**22641997**	Y5, Y12 (EZ 141)	single	9106	2	outer contact silver
11_TNC-50-3-29/113_NE ⊞	**22544841**	Y5, Y12 (EZ 141)	single	9106	2	outer contact gold

> for flexible cables

> cable entry clamp

> centre contact soldered

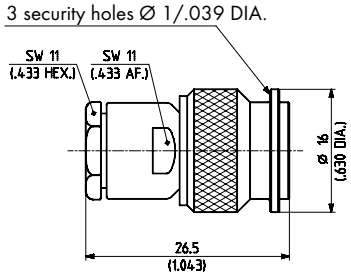

HUBER+SUHNER type	Item no.	Cable group (example)	Packaging	Assembly instruction	Notes
11_TNC-50-2-1/133_NE	**22640783**	U2 (RG 316/U)	single	3005	
11_TNC-50-3-5/133_NE	**22640798**	U7, 10 (RG 58C/U)	single	3005	
11_TNC-50-3-6/133_NE ⊞	**22543475**	U7, 10 (RG 58C/U)	single	3004	

⊞ **centre contact NOT captivated**

Cable groups see page 28 Assembly tools see page 385 Mounting holes see page 412

> for flexible cables

> cable entry clamp

> centre contact soldered

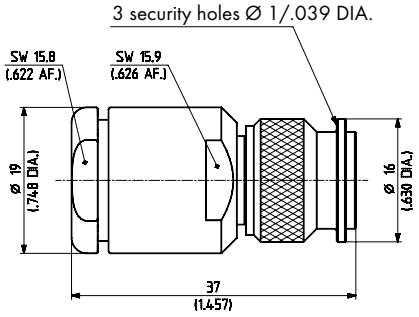

HUBER+SUHNER type	Item no.	Cable group (example)	Packaging	Assembly instruction	Notes
11_TNC-50-7-2/133_NE	**22640466**	U28 (RG 213/U) U33 (RG 214/U)	single	3008	

> for flexible cables

> HUBER+SUHNER® full crimp

> taper sleeves see page 406

3 security holes Ø 1/.039 DIA.

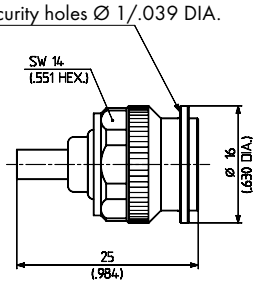

Fig. 1

3 security holes Ø 1/.039 DIA.

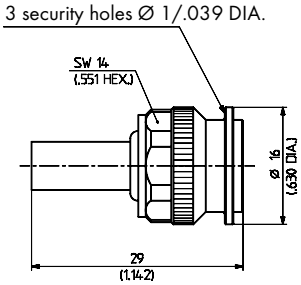

Fig. 2

HUBER+SUHNER type	Item no.	Cable group (example)	Packaging	Assembly instruction	Crimp insert	Fig.
11_TNC-50-2-112/133_NE	**23001710**	U2 (RG 316/U)	single	27215	1 A	1
11_TNC-50-2-113/133_NE	**23001711**	U4 (K 02252 D)	single	27215	1 A	1
11_TNC-50-3-115/133_NE	**23001712**	U9 (RG 223/U)	single	3015	2 B	2
11_TNC-50-3-115/133_NH	**23001713**	U9 (RG 223/U)	bulk 100 pcs.	3015	2 B	2
11_TNC-50-3-116/133_NE	**23001714**	U7 (RG 58 C/U)	single	3015	2 B	2
11_TNC-50-3-117/133_NE	**23010015**	U11 (RG 400/U)	single	3015	2 B	2

Cable groups see page 28 Assembly tools see page 385 Mounting holes see page 412

Right angle cable plugs (male)

> for flexible cables

> cable entry clamp

> centre contact soldered

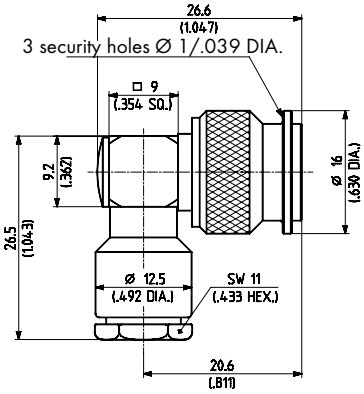

Fig. 1

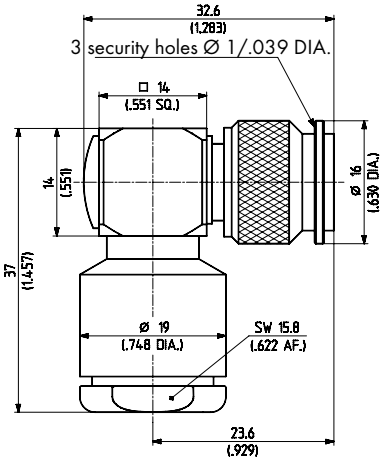

Fig. 2

HUBER+SUHNER type	Item no.	Cable group (example)	Packaging	Assembly instruction	Fig.	Notes
16_TNC-50-2-10/133_NE	**8403229**	U2 (RG 316/U)	single	3024	1	
16_TNC-50-3-28/133_NE	**84012481**	U7, 10 (RG 58C/U)	single	3024	1	
16_TNC-50-7-4/133_NE	**22651587**	U28 (RG 213/U) U33 (RG 214/U)	single	3003	2	

> for flexible cables

> cable entry crimp

> centre contact soldered

> taper sleeves see page 406

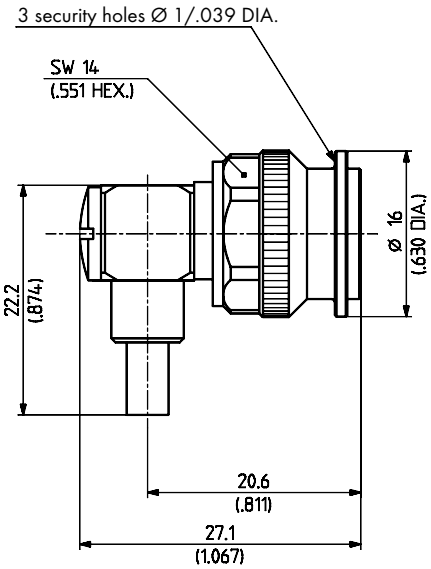

HUBER+SUHNER type	Item no.	Cable group (example)	Packaging	Assembly instruction	Crimp insert
16_TNC-50-2-119/133_NE	**23010087**	U2 (RG 316/U)	single	27216	A
16_TNC-50-2-7/133_NE	**23001716**	U4 (K 02252 D)	single	27216	A

Cable groups see page 28 Assembly tools see page 385 Mounting holes see page 412

> for flexible cables

> HUBER+SUHNER® full crimp

> taper sleeves see page 406

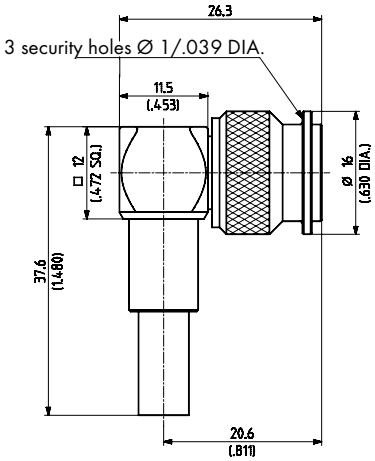

HUBER+SUHNER type	Item no.	Cable group (example)	Packaging	Assembly instruction	Crimp insert
16_TNC-50-3-13/133_NE	**22640492**	U7 (RG 58 C/U)	single	3015	2 B
16_TNC-50-3-18/133_NE	**22543606**	U9 (RG 223/U)	single	3015	2 B

> for flexible cables

> cable entry clamp

> centre contact soldered

> taper sleeves see page 406

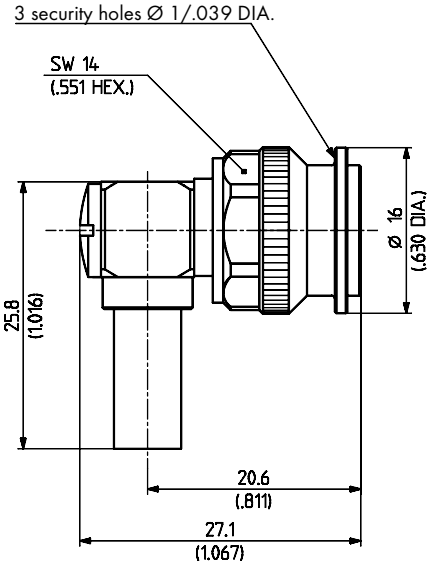

HUBER+SUHNER type	Item no.	Cable group (example)	Packaging	Assembly instruction	Crimp insert
16_TNC-50-3-111/133_NE	**23001717**	U9 (RG 223/U)	single	27218	B
16_TNC-50-3-112/133_NE	**23010115**	U7 (RG 58 C/U)	single	27218	B
16_TNC-50-4-115/133_NE	**23001718**	S16 (S 04262 D)	single	27219	C
16_TNC-50-4-115/133_NH	**22658175**	S16 (S 04262 D)	bulk 100 pcs.	27219	C

Cable groups see page 28 | Assembly tools see page 385 | Mounting holes see page 412

Straight cable jacks (female)

> for flexible cables

> cable entry clamp

> centre contact soldered

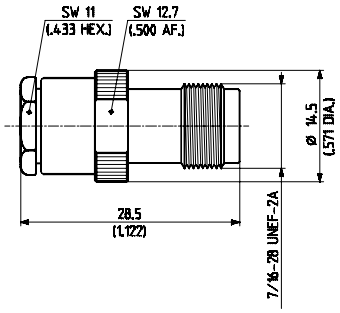

HUBER+SUHNER type	Item no.	Cable group (example)	Packaging	Assembly instruction	Notes
21_TNC-50-2-2/133_NE	**22640515**	U2 (RG 316/U)	single	3005	
21_TNC-50-3-4/133_NE	**22640523**	U7, 10 (RG 58C/U)	single	3005	

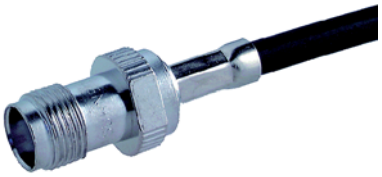

> for flexible cables

> HUBER+SUHNER® full crimp

> taper sleeves see page 406

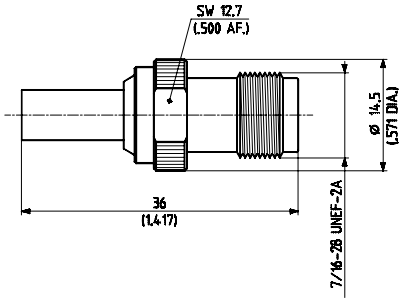

HUBER+SUHNER type	Item no.	Cable group (example)	Packaging	Assembly instruction	Crimp insert
21_TNC-50-3-31/133_NE	**84016544**	U7 (RG 58 C/U)	single	0000231215	2 B
21_TNC-50-3-32/133_NE	**84016601**	U9 (RG 223/U)	single	0000231453	2 B

Cable groups see page 28 | Assembly tools see page 385 | Mounting holes see page 412

Straight bulkhead cable jacks (female)

> for semi-rigid cables

> cable entry soldered

> with panel seal

> insulating washers see page 408

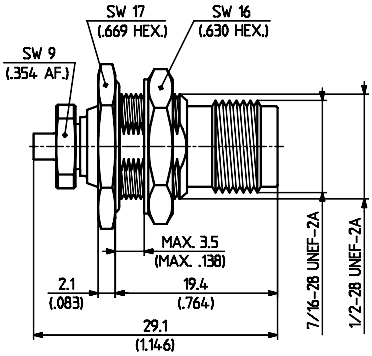

Fig. 1

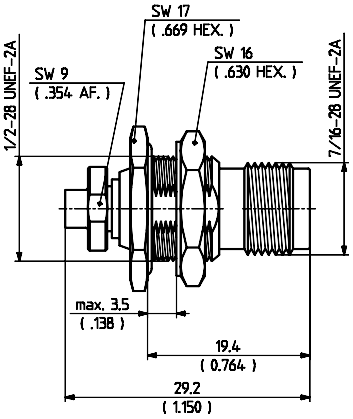

Fig. 2

HUBER+SUHNER type	Item no.	Cable group (example)	Packaging	Assembly instruction	Mounting hole	Fig.
24_TNC-50-2-31/133_NE ⊞	**23001721**	Y3, Y11 (EZ 86)	single	27269	ML 4	1
24_TNC-50-3-30/133_NH ⊞	**23001723**	Y5, Y12 (EZ 141)	bulk 100 pcs.	27220	ML 4	2

> for flexible cables

> cable entry clamp

> centre contact soldered

> with panel seal

> insulating washers see page 408

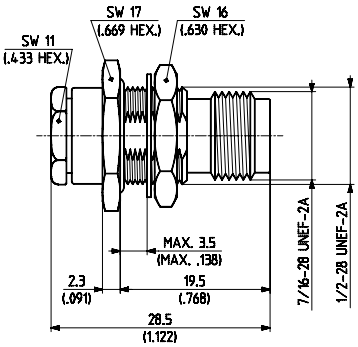

HUBER+SUHNER type	Item no.	Cable group (example)	Packaging	Assembly instruction/ Mounting hole
24_TNC-50-2-1/133_NE	**22543398**	U2 (RG 316/U)	single	3005 / ML 4

⊞ **centre contact NOT captivated**

Cable groups see page 28 | Assembly tools see page 385 | Mounting holes see page 412

> for flexible cables

> HUBER+SUHNER® full crimp

> with panel seal

> taper sleeves see page 406

> insulating washers see page 408

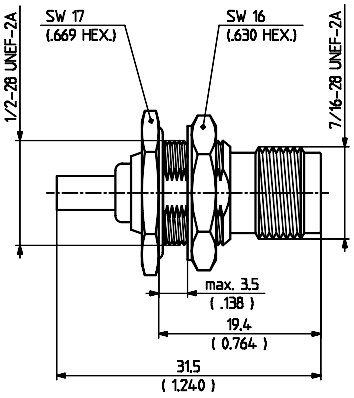

Fig. 1

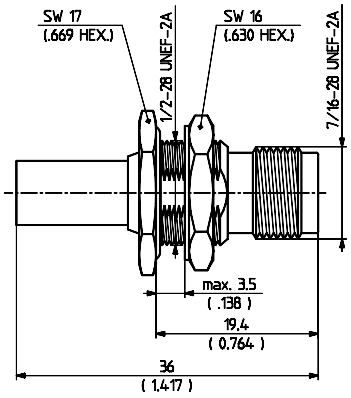

Fig. 2

HUBER+SUHNER type	Item no.	Cable group (example)	Packaging	Assembly instruction/ Mounting hole	Crimp insert	Fig.
24_TNC-50-2-27/133_NE	**23001719**	U2 (RG 316/U)	single	9068 / ML 4	1 A	1
24_TNC-50-2-29/133_NH	**23001720**	U4 (K 02252 D)	bulk 100 pcs.	9068 / ML 4	1 A	1
24_TNC-50-3-21/133_NE	**23001722**	U9 (RG 223/U)	single	27221 / ML 4	2 B	2
24_TNC-50-3-23/133_NE	**23010150**	U7 (RG 58 C/U)	single	27221 / ML 4	2 B	2

Straight panel cable jacks (female)

> for flexible cables

> cable entry clamp

> centre contact soldered

> fastening screws see page 407

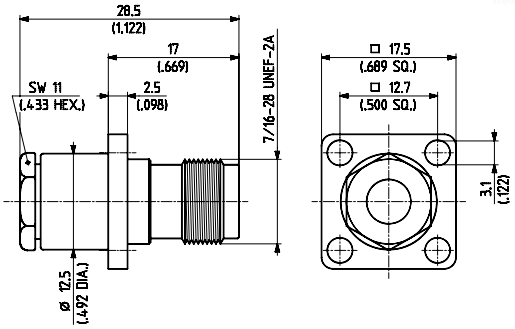

HUBER+SUHNER type	Item no.	Cable group (example)	Packaging	Assembly instruction/ Mounting hole
25_TNC-50-2-1/133_NE	**22640578**	U2 (RG 316/U)	single	3005 / ML 8
25_TNC-50-3-9/133_NE	**22643707**	U7, 10 (RG 58C/U)	single	3005 / ML 8

Cable groups see page 28 Assembly tools see page 385 Mounting holes see page 412

> for flexible cables

> HUBER+SUHNER® full crimp

> fastening screws see page 407

> taper sleeves see page 406

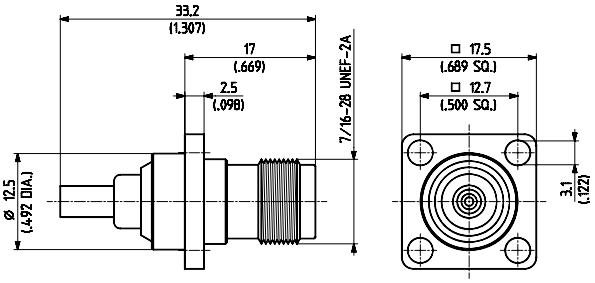

Fig. 1

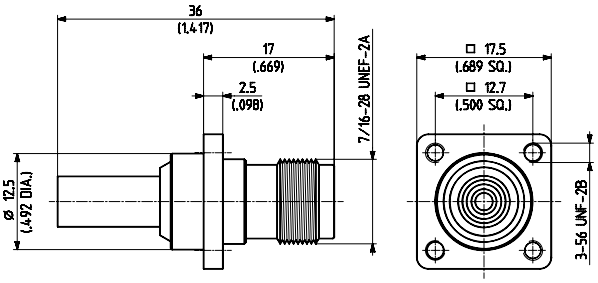

Fig. 2

HUBER+SUHNER type	Item no.	Cable group (example)	Packaging	Mounting hole	Crimp insert	Fig.
25_TNC-50-2-19/133_NE	**84016723**	U2 (RG 316/U)	single	ML 8	1 A	1
25_TNC-50-3-19/133_NE	**84016722**	U7 (RG 58 C/U)	single	ML 8	2 B	2 *

* mounting also possible with screws ISO M 2.5

RECEPTACLES WITH SOLDER END

Receptacles, plugs (male)

> bulkhead mounted

> with panel seal

> insulating washers see page 408

> solder tags see page 409

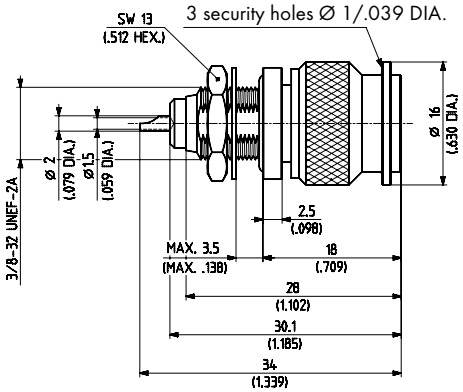

HUBER+SUHNER type	Item no.	Packaging	Mounting hole	Notes
12_TNC-50-0-1/133_NE	**22640467**	single	ML 2	

Cable groups see page 28 Assembly tools see page 385 Mounting holes see page 412

Receptacles, jacks (female)

> bulkhead mounted
> insulating washers see page 408
> solder tags see page 409

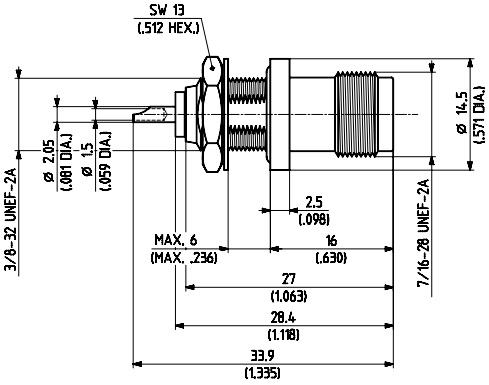

Fig. 1

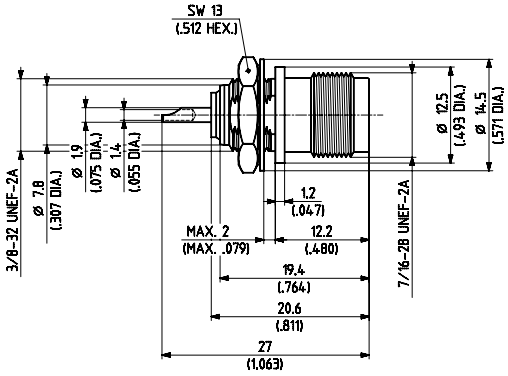

Fig. 2

HUBER+SUHNER type	Item no.	Packaging	Mounting hole	Fig.	Notes
22_TNC-50-0-1/133_NE	**22640537**	single	ML 1	1	with panel seal
22_TNC-50-0-2/133_NE	**22640539**	single	ML 2	2	

> panel mounted
> fastening screws see page 407

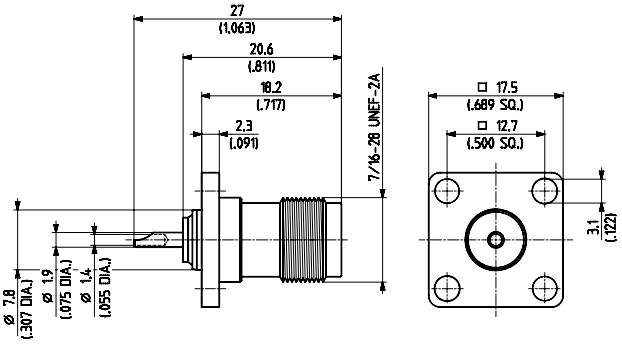

HUBER+SUHNER type	Item no.	Packaging	Mounting hole	Notes
23_TNC-50-0-2/133_NE	**22640549**	single	ML 6	
23_TNC-50-0-2/133_NH	**22644322**	bulk 100 pcs.	ML 6	

> panel mounted
> fastening screws see page 407

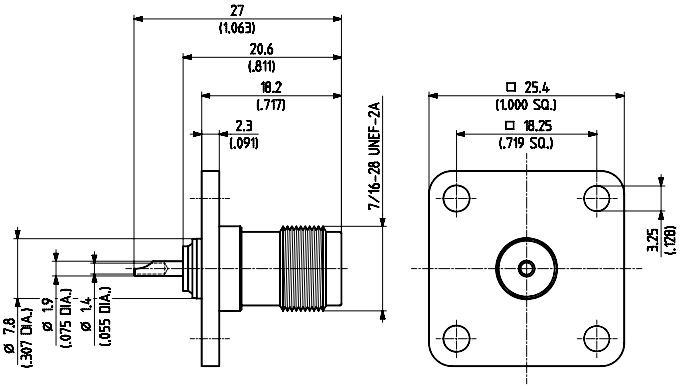

HUBER+SUHNER type	Item no.	Packaging	Mounting hole	Notes
23_TNC-50-0-6/133_NE	**22640551**	single	ML 5	suitable for SUCOBOX® applications, see page 410

Cable groups see page 28 | Assembly tools see page 385 | Mounting holes see page 412

Right angle receptacles, jack (female)

> bulkhead mounted
> with panel seal
> insulating washers see page 408
> solder tags see page 409

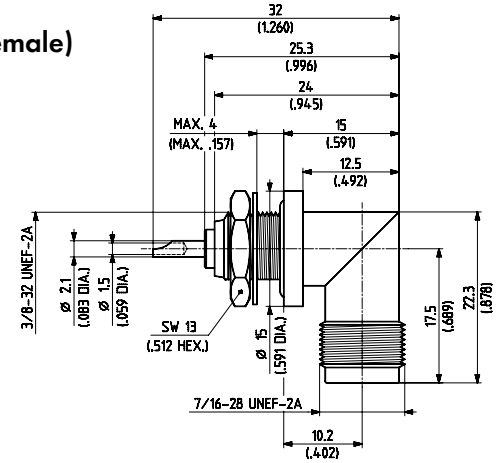

HUBER+SUHNER type	Item no.	Packaging	Mounting hole	Notes
27_TNC-50-0-1/133 NE	**22543405**	single	ML 2	

PROTECTIVE CAPS AND SHORTS

> protective cap for plugs

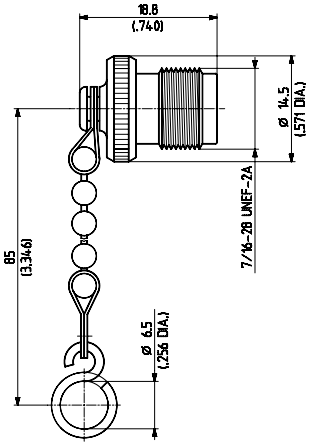

HUBER+SUHNER type	Item no.	Packaging	Notes
61_TNC-0-0-1/-33_-E	**22640661**	single	with chain

> protective cap for jacks

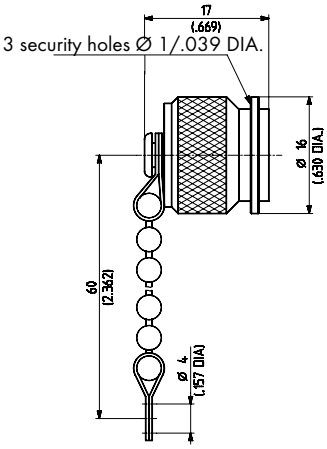

HUBER+SUHNER type	Item no.	Packaging	Notes
62_TNC-0-0-1/-33_-E	**22640665**	single	with chain

Cable groups see page 28 Assembly tools see page 385 Mounting holes see page 412

A FURTHER HUBER+SUHNER PRODUCT!

SUCOTEST™ 18 A test assemblies for harsh environments

Details on this product are to be found in the brochure, Item no. 84017528. Get your copy free of charge at **www.hubersuhner.com.**

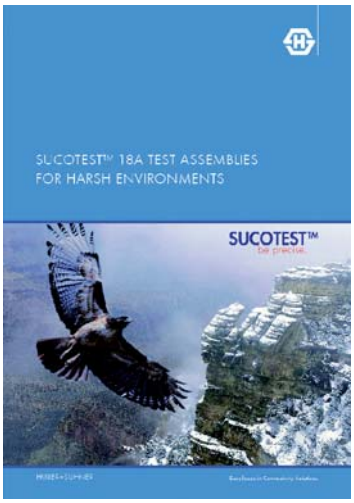

SERIES TNC 75 Ω, COAXIAL MINIATURE CONNECTORS

DESCRIPTION

Within the internationally standardized TNC mating face dimensions a perfect 75 Ω characteristic impedance cannot be realized. However, at frequencies up to 1 GHz the small impedance deviation is negligible for practical applications. A typical VSWR of 1.15 at 1 GHz is achieved. The threaded coupling mechanism allows them to be used under higher environmental load than BNC.

Compatibility

75 Ω TNC connectors and 50 Ω TNC connectors are intermateable without restrictions.

CONTENTS PAGE

INTERFACE DIMENSIONS

Plug (male)

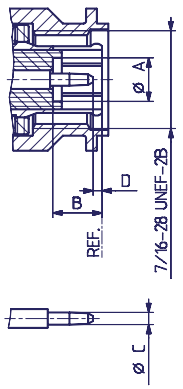

Jack (female)

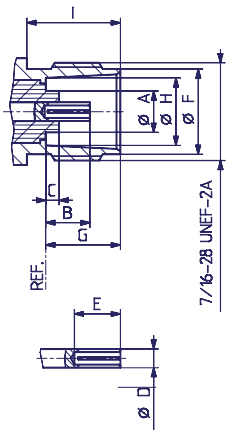

INTERFACE DIMENSIONS (MM / *INCHES*)

	Plug		Jack	
	min.	max.	min.	max.
A	4.83/.190	4.97/.196	–	4.72/.186
B	5.28/.208	5.79/.228	4.72/.186	5.23/.206
C	1.32/.052	1.37/.054	1.50 / .059 nom.	
D	0.08/.003	1.02/.040	2.10 / .827 nom.	
E	–	–	4.95/.195	–
F	–	–	9.60/.378	9.70/.382
G	–	–	8.35/.328	8.48/.334
H	–	–	8.10/.319	8.15/.321
I	–	–	10.60/.417	–

Interface dimensions conformable to the Standards:

(based on
IEC 60169-17 and
IEC 60169-8, Annex A)

IP rating (interface, mated) IP68

TECHNICAL DATA

ELECTRICAL DATA	REQUIREMENTS
Impedance	75 Ω
Frequency range	DC ... 1 GHz
Dielectric withstanding voltage (at sea level)	1.5 kV rms, 50 Hz (depending on cable)
Working voltage (at sea level) - unmated	500 V rms, 50 Hz (depending on cable)
Insulation resistance	≥ $5 \cdot 10^3$ MΩ
Contact resistance - centre contact - outer contact	 ≤ 1.5 mΩ ≤ 1 mΩ
RF-leakage (measured at 1 GHz)	≥ 60 dB

MECHANICAL DATA	REQUIREMENTS
Coupling nut torque - recommended - proof torque	 46 Ncm ... 69 Ncm / *4.1 in. lbs ... 6.1 in. lbs* 170 Ncm / *15.0 in. lbs*
Coupling nut retention force	≥ 450 N / *101.2 lbs*
Contact captivation	≥ 27 N / *6.1 lbs*
Cable retention force[1)]	see pages 28 – 34
Durability (matings)	≥ 500

1) Value considers maximum load of the cables without irreversible variations of specifications.

ENVIRONMENTAL DATA	TEST CONDITIONS
Temperature range	– 65°C ... + 165°C / – 85 °F ... + 329 °F
Climatic category	IEC → 55/155/21
Thermal shock	MIL-STD-202, Method 107, Condition B
Moisture resistance	MIL-STD-202, Method 106
Corrosion	Saltspray test acc. to MIL-STD-202, Method 101, Condition B
Vibration	MIL-STD-202, Method 204, Condition B
Shock	MIL-STD-202, Method 213, Condition G

MATERIAL DATA		
CONNECTOR PART	**MATERIAL**	**PLATING**
Bodies	brass	SUCOPLATE®
Pin contacts	brass	gold / SUCOPRO
Socket contacts	copper-beryllium alloy copper alloy	gold / SUCOPRO
Crimp ferrules	copper brass	SUCOPLATE®
Insulators, standard version	PTFE or PFA	
Gaskets	silicone rubber	

Some connectors may have a specification that differs from the above mentioned data.

The products are designed and guaranteed to pass the above mentioned test procedures. Any additional or different requirement arising from specific applications or environmental conditions which is not covered by these test procedures is subject to request.

CABLE CONNECTORS

Straight cable plugs (male)

> for flexible cables
> cable entry clamp
> centre contact soldered

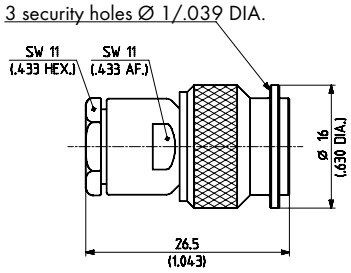

HUBER+SUHNER type	Item no.	Cable group (example)	Packaging	Assembly instruction	Notes
11_TNC-75-4-2/133_NE	**22543477**	U15 (RG 59 B/U)	single	3005	

> for flexible cables
> HUBER+SUHNER® full crimp
> taper sleeves see page 406

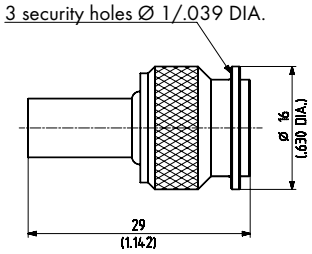

HUBER+SUHNER type	Item no.	Cable group (example)	Packaging	Assembly instruction	Crimp insert
11_TNC-75-4-4/133_NE	**22543478**	U16 (RG 59 B/U)	single	3015	2 C
11_TNC-75-4-9/133_NE	**22642678**	U18 (G 04233 D)	single	3015	2 C
11_TNC-75-4-30/133_NE	**22642503**	U17 (S 04233)	single	3015	2 C

Right angle cable plugs (male)

> for flexible cables
> cable entry clamp
> centre contact soldered

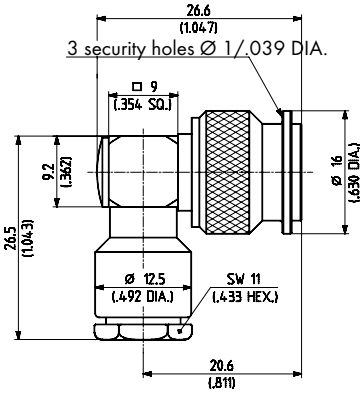

HUBER+SUHNER type	Item no.	Cable group (example)	Packaging	Assembly instruction	Notes
16_TNC-75-4-2/133_NE	**22641402**	U15 (RG 59 B/U)	single	3024	

Cable groups see page 28 | Assembly tools see page 385 | Mounting holes see page 412

Straight bulkhead cable jacks (female)

> for flexible cables

> HUBER+SUHNER® full crimp

> with panel seal

> taper sleeves see page 406

> insulating washers see page 408

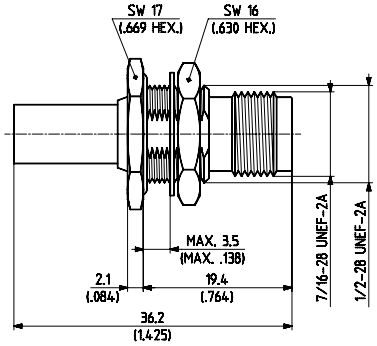

HUBER+SUHNER type	Item no.	Cable group (example)	Packaging	Assembly instruction/ Mounting hole	Crimp insert
24_TNC-75-4-8/133_NE	**22544140**	U16 (RG 59 B/U)	single	3015 / ML 4	2 C

PROTECTIVE CAPS

> protective cap for plugs

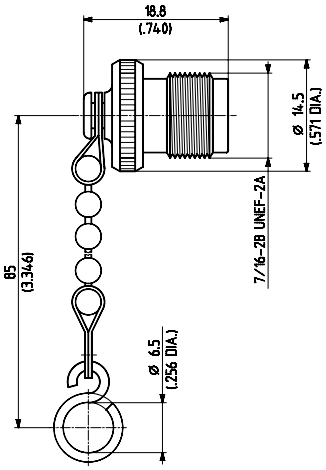

HUBER+SUHNER type	Item no.	Packaging	Notes
61_TNC-0-0-1/-33_-E	**22640661**	single	with chain

> protective cap for jacks

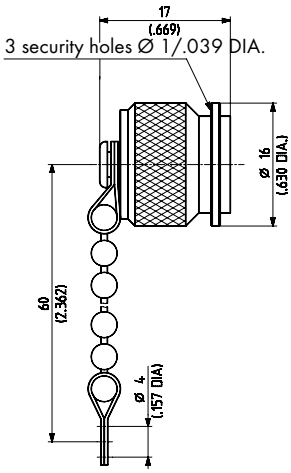

HUBER+SUHNER type	Item no.	Packaging	Notes
62_TNC-0-0-1/-33_-E	**22640665**	single	with chain

Cable groups see page 28 | Assembly tools see page 385 | Mounting holes see page 412

A FURTHER HUBER+SUHNER PRODUCT GROUP!

RF coaxial cables

Details on this product are to be found in the general catalogue,
Item no. 644817. Get your copy free of charge at **www.hubersuhner.com.**

SERIES BNO TWINAXIAL MINIATURE CONNECTORS

DESCRIPTION

HUBER+SUHNER BNO twin connectors are two pin bayonet coupled (same bayonet locking mechanism as BNC) connectors for use with balanced twin-conductor cables with 75 Ω to 130 Ω impedance. They have polarized contacts and are not inter-mateable with BNC.

The HUBER+SUHNER BNO twin connectors are suitable for applications up to 200 MHz (i.e. computer networks and process control).

CONTENTS PAGE

INTERFACE DIMENSIONS

Plug (male)

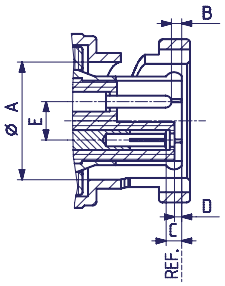

Jack (female)

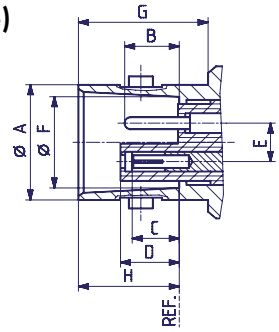

INTERFACE DIMENSIONS (MM / *INCHES*)

	Plug		Jack	
	min.	max.	min.	max.
A	9.78/.385	9.91/.390	9.60/.378	9.70/.382
B	0.89/.035	1.65/.065	4.34/.171	5.08/.200
C	0.81/.032	1.80/.071	3.96/.156	5.08/.200
D	0.71/.028	1.07/.042	4.78/.188	5.23/.206
E	3.14/.124	3.26/.128	3.14/.124	3.26/.128
F	–	–	8.10/.319	8.15/.321
G	–	–	10.52/.414	–
H	–	–	8.36/.329	8.46/.333

Interface dimensions conformable to the Standards:

International: **IEC 60169-22**

IP rating (interface, mated) IP64

TECHNICAL DATA

ELECTRICAL DATA	REQUIREMENTS
Impedance	not defined
Frequency range (for connector interface)	DC ... 200 MHz
Dielectric withstanding voltage (at sea level)	1.5 kV rms, 50 Hz between any two contacts
Insulation resistance	$\geq 10^4$ MΩ
Contact resistance - centre contact - outer contact	 ≤ 2 mΩ ≤ 2 mΩ

MECHANICAL DATA	REQUIREMENTS
Coupling nut torque	*7 Ncm ... 28 Ncm / 0.6 in. lbs ... 2.5 in. lbs*
Coupling nut retention force	≥ 450 N / *101.2 lbs*
Cable retention force[1)]	see pages 28 – 34
Durability (matings)	≥ 500

1) Value considers maximum load of the cables without irreversible variations of specifications.

ENVIRONMENTAL DATA	TEST CONDITIONS
Temperature range	*– 50°C ... + 125°C / – 58 °F ... + 257 °F*
Climatic category	IEC → 50/125/21
Thermal shock	MIL-STD-202, Method 107, Condition B
Moisture resistance	MIL-STD-202, Method 106
Corrosion	Saltspray test acc. to MIL-STD-202, Method 101, Condition B
Vibration	MIL-STD-202, Method 204, Condition B
Shock	MIL-STD-202, Method 213, Condition G

MATERIAL DATA		
CONNECTOR PARTS	**MATERIAL**	**PLATING**
Bodies	brass	SUCOPLATE®
Pin contacts	brass	gold
Socket contacts	copper-beryllium alloy	gold
Crimp ferrules	copper	SUCOPLATE®
Insulators	ETFE (Tefzel)	
Gaskets	silicone rubber	

Some connectors may have a specification that differs from the above mentioned data.

The products are designed and guaranteed to pass the above mentioned test procedures. Any additional or different requirement arising from specific applications or environmental conditions which is not covered by these test procedures is subject to request.

CABLE CONNECTORS

Straight cable plugs (male)

> cable entry crimp
> centre contact crimp or soldered

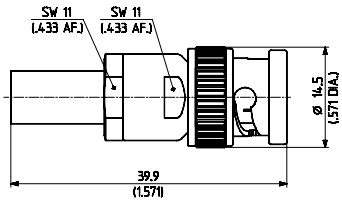

HUBER+SUHNER type	Item no.	Cable group (example)	Packaging	Assembly instruction	Crimp insert
11_BNO-0-4-1/133_NE	**22541080**	V1 (RG 108A/U)	single	3083	76_Z-0-4-8
11_BNO-0-4-1/133_NH	**22649903**	V1 (RG 108A/U)	bulk 100 pcs.	3083	76_Z-0-4-8

Right angle cable plugs (male)

> cable entry crimp
> centre contact soldered

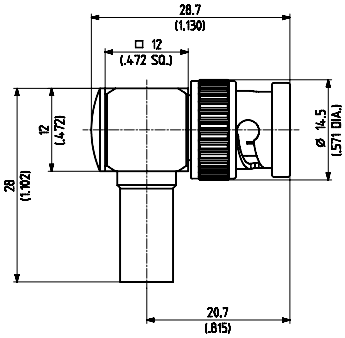

HUBER+SUHNER type	Item no.	Cable group (example)	Packaging	Assembly instruction	Crimp insert
16_BNO-0-4-1/133_NE	**22643456**	V1 (RG 108A/U)	single	9042	C

Straight cable jacks (female)

> cable entry crimp
> centre contact crimp or soldered

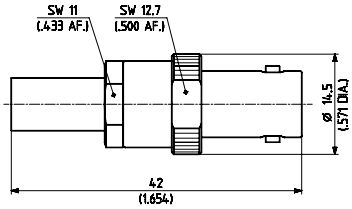

HUBER+SUHNER type	Item no.	Cable group (example)	Packaging	Assembly instruction	Crimp insert
21_BNO-0-4-1/133_NE	**22541081**	V1 (RG 108A/U)	single	3083	76_Z-0-4-8

Cable groups see page 28 Assembly tools see page 385 Mounting holes see page 412

Straight bulkhead cable jacks (female)

> cable entry crimp

> centre contact crimp or soldered

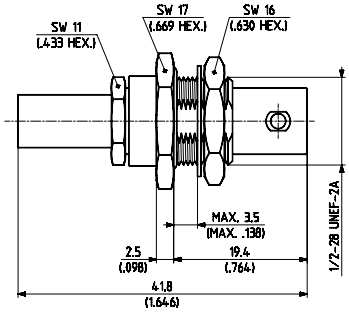

HUBER+SUHNER type	Item no.	Cable group (example)	Packaging	Assembly instruction/ Mounting hole	Crimp insert
24_BNO-0-4-1/133_NE	**22541086**	V1 (RG 108A/U)	single	9043 / ML 4	76_Z-0-4-8

RECEPTACLES WITH SOLDER END

Receptacles, jacks (female)

> bulkhead mounted

> without panel seal

> front mounting

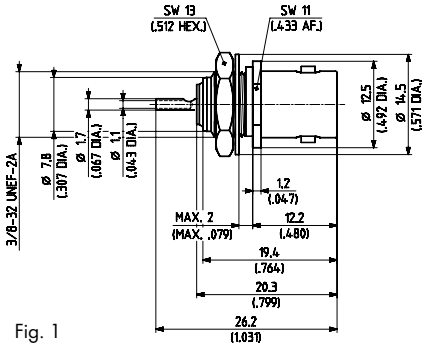

Fig. 1

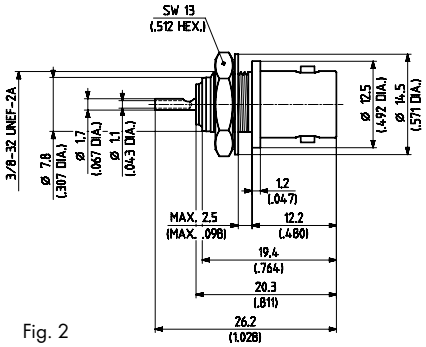

Fig. 2

HUBER+SUHNER type	Item no.	Packaging	Mounting hole	Fig.	Notes
22_BNO-0-0-1/133_NE	**22541082**	single	ML 3	1	max. panel thickness 2 mm / .079 *in.*
22_BNO-0-0-2/133_NE	**22541083**	single	ML 2	2	max. panel thickness 2.5 mm / .098 *in.*

Cable groups see page 28 Assembly tools see page 385 Mounting holes see page 412

> panel mounted

> fastening screws see page 407

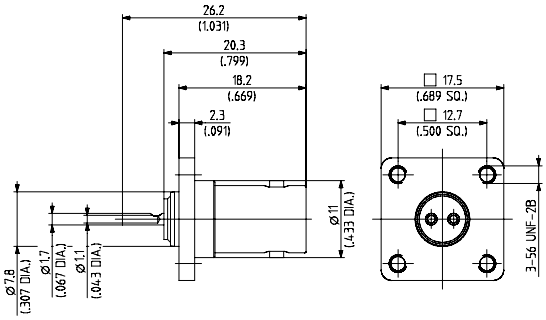

Fig. 1

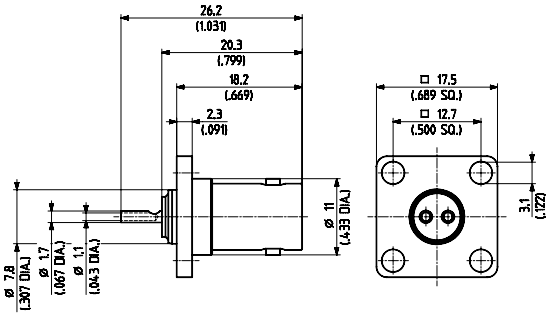

Fig. 2

HUBER+SUHNER type	Item no.	Packaging	Mounting hole	Fig.	Notes
23_BNO-0-0-1/133_NE	**22543389**	single	ML 6	1	flange with 4 threads*
23_BNO-0-0-2/133_NE	**22541085**	single	ML 6	2	flange with 4 holes

* mounting also possible with screws ISO M 2.5

Cable groups see page 28 | Assembly tools see page 385 | Mounting holes see page 412

SERIES BNT TRIAXIAL MINIATURE CONNECTORS

DESCRIPTION

HUBER+SUHNER BNT triaxial connectors are RF connectors with a bayonet coupling mechanism and three concentric contacts (inner conductor, inner screen and outer screen) for triaxial cables.
HUBER+SUHNER BNT connectors are intermateable with BNC connectors, but the inner conductor and outer screen are connected only.
BNT connectors are suitable for applications up to 3 GHz (inner coaxial line).

CONTENTS PAGE

INTERFACE DIMENSIONS

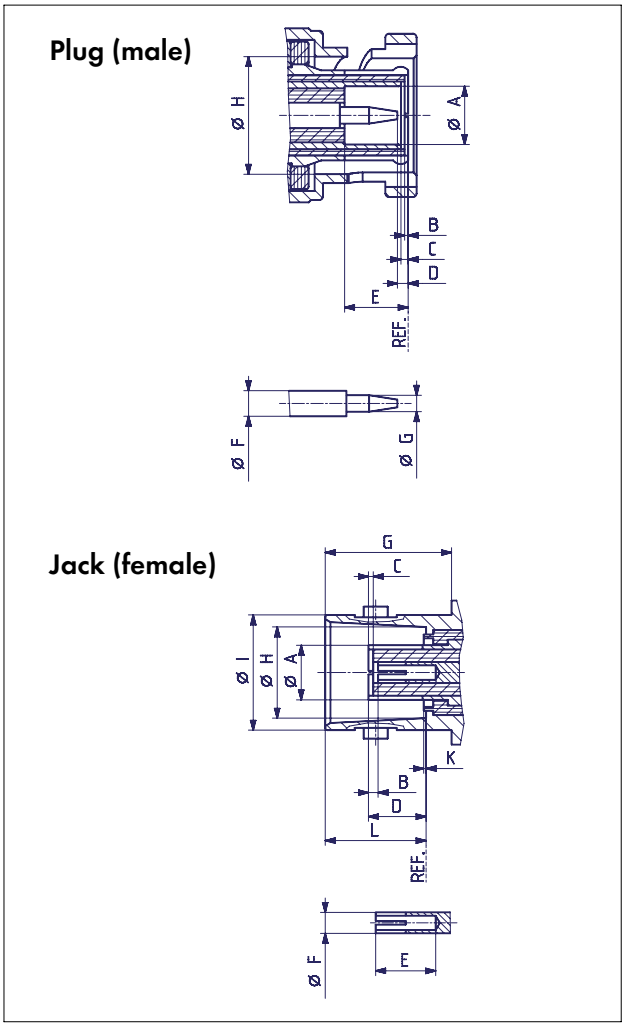

INTERFACE DIMENSIONS (MM / *INCHES*)

	Plug		Jack	
	min.	max.	min.	max.
A	*4.85/.191*	*4.90/.193*	*4.95/.195**	*5.05/.199**
B	0.00/.000	0.40/.016	0.10/.004	–
C	0.50/.020 nom.		0.20/.008 nom	
D	0.60/.024 nom.		4.90/.193 nom.	
E	5.30/.209	–	5.00/.197	–
F	1.43/.056	1.47/.058	1.70/.067	1.75/.069
G	1.32/.052	1.37/.054	10.52/.414	–
H	9.78/.385	9.91/.390	8.10/.319	8.15/.321
I	–	–	9.60/.378	9.70/.382
K	–	–	0.20/.008 nom.	
L	–	–	8.31/.327	8.51/.335

* prior to slotting

IP rating (interface, mated) IP64

BNT

TECHNICAL DATA

ELECTRICAL DATA	REQUIREMENTS
Impedance	50 Ω (between centre contact and first outer contact)
Frequency range	DC ... 3 GHz (inner coaxial line)
Dielectric withstanding voltage (at sea level) - centre contact/inner screen - between screens	 1 kV rms, 50 Hz 400 V rms, 50 Hz
Insulation resistance - centre contact/inner screen - between screens	 $\geq 5 \cdot 10^3$ MΩ $\geq 5 \cdot 10^2$ MΩ
Contact resistance - centre contact - inner screen - outer screen	 ≤ 1.5 mΩ ≤ 1 mΩ ≤ 1.5 mΩ

MECHANICAL DATA	REQUIREMENTS
Coupling nut torque	7 Ncm ... 28 Ncm / *0.6 in. lbs ... 2.5 in. lbs*
Coupling nut retention force	≥ 450 N / *101.2 lbs*
Contact captivation	≥ 27 N / *6.1 lbs*
Cable retention force[1)]	see pages 28 – 34
Durability (matings)	≥ 500

1) Value considers maximum load of the cables without irreversible variations of specifications.

ENVIRONMENTAL DATA	TEST CONDITIONS
Temperature range	– 50°C ... + 125°C / *– 58 °F ... + 257 °F*
Climatic category	IEC → 50/125/21
Thermal shock	MIL-STD-202, Method 107, Condition B
Moisture resistance	MIL-STD-202, Method 106
Corrosion	Saltspray test acc. to MIL-STD-202, Method 101, Condition B
Vibration	MIL-STD-202, Method 204, Condition B
Shock	MIL-STD-202, Method 213, Condition G

MATERIAL DATA		
CONNECTOR PARTS	**MATERIAL**	**PLATING**
Bodies	brass	SUCOPLATE®
Pin contacts	brass	gold
Socket contacts	copper-beryllium alloy	gold
1st outer contact	brass	silver / SUCOPLATE®
Crimp ferrules	copper	SUCOPLATE®
Insulators	PTFE or PFA	
Gaskets	silicone rubber	

Some connectors may have a specification that differs from the above mentioned data.

The products are designed and guaranteed to pass the above mentioned test procedures. Any additional or different requirement arising from specific applications or environmental conditions which is not covered by these test procedures is subject to request.

CABLE CONNECTORS

Straight cable plugs (male)

> cable entry clamp

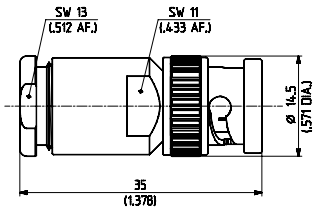

HUBER+SUHNER type	Item no.	Cable group (example)	Packaging	Assembly instruction
11_BNT-50-2-1/103_NE ⊞	**22541057**	W1 (G 02332)	single	3082
11_BNT-50-3-1/103_NE	**22541058**	W2 (G 03332)	single	3082
11_BNT-50-4-1/103_NE	**22541061**	(UR 114)	single	3082

Straight bulkhead cable jacks (female)

> cable entry clamp
> with panel seal

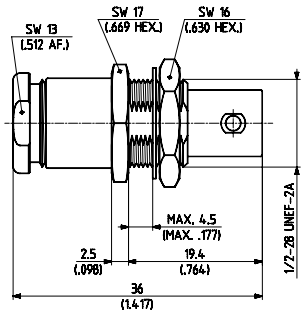

HUBER+SUHNER type	Item no.	Cable group (example)	Packaging	Assembly instruction	Mounting hole
24_BNT-50-2-1/103_NE ⊞	**22541075**	W1 (G 02332)	single	3082	ML 4
24_BNT-50-3-1/103_NE	**22541077**	W2 (G 03332)	single	3082	ML 4

⊞ **centre contact NOT captivated**

Cable groups see page 28 Assembly tools see page 385 Mounting holes see page 412

RECEPTACLES WITH SOLDER END

Receptacles, jacks (female)

> bulkhead mounted
> without panel seal
> front mounting

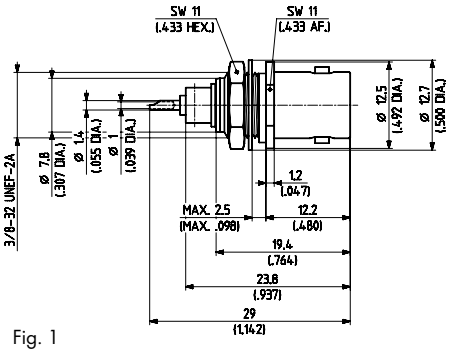

Fig. 1

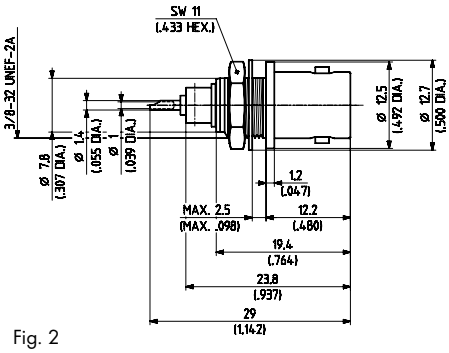

Fig. 2

HUBER+SUHNER type	Item no.	Packaging	Mounting hole	Fig.	Notes
22_BNT-50-0-1/103_NE	**22541069**	single	ML 3	1	
22_BNT-50-0-2/103_NE	**22541070**	single	ML 2	2	

Flange mount, jacks (female)

> panel mounted
> fastening screws see page 407

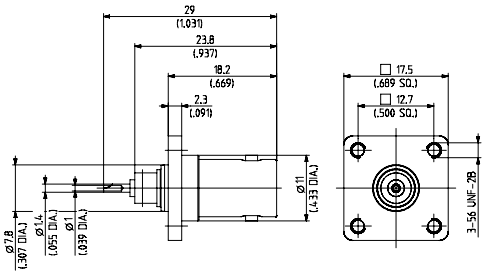

Fig. 1

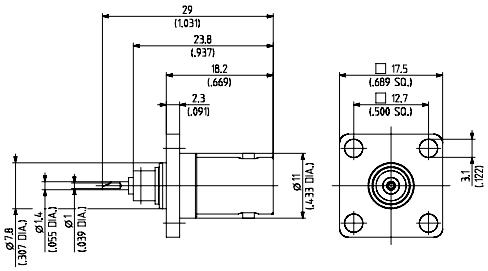

Fig. 2

HUBER+SUHNER type	Item no.	Packaging	Mounting hole	Fig.	Notes
23_BNT-50-0-1/103_NE	**22544850**	single	ML 6	1	flange with 4 threads*
23_BNT-50-0-2/103_NE	**22541073**	single	ML 6	2	flange with 4 holes

* mounting also possible with screws ISO M 2.5

Cable groups see page 28 | Assembly tools see page 385 | Mounting holes see page 412

A FURTHER HUBER+SUHNER PRODUCT GROUP!

SENCITY® broadband antennas for indoor applications

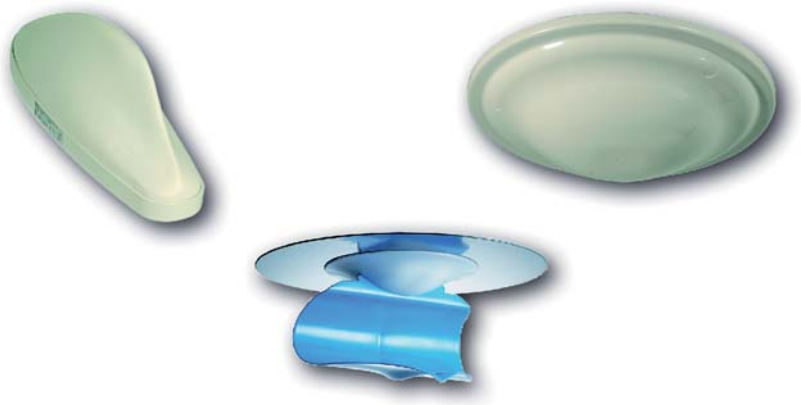

Details on this product are to be found in the brochure, Item no. 84001364. Get your copy free of charge at **www.hubersuhner.com.**

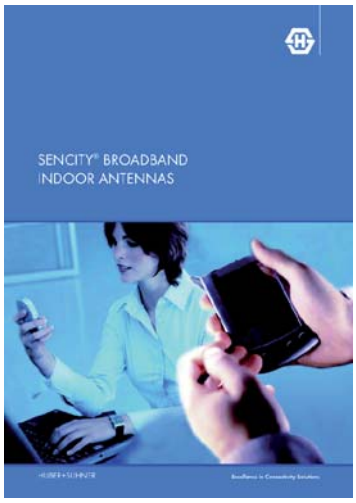

SERIES SHV, HIGH VOLTAGE CONNECTORS

DESCRIPTION

HUBER+SUHNER SHV (Safe High Voltage) connectors provide more secure handling: center contacts are well recessed to prevent shock hazards in unmated condition. All inner contacts are fully captivated and will withstand axial forces of 100 N minimum. When mating a connector pair the outer conductor contact is made prior to the inner conductor contacts.
SHV connectors are suitable for all high voltage applications up to 5 kV DC or 3.5 kV rms. These connectors are typically used in nuclear instruments or test and measurement equipment. Voltages are valid for both, the mated and the unmated condition.

CONTENTS PAGE

INTERFACE DIMENSIONS

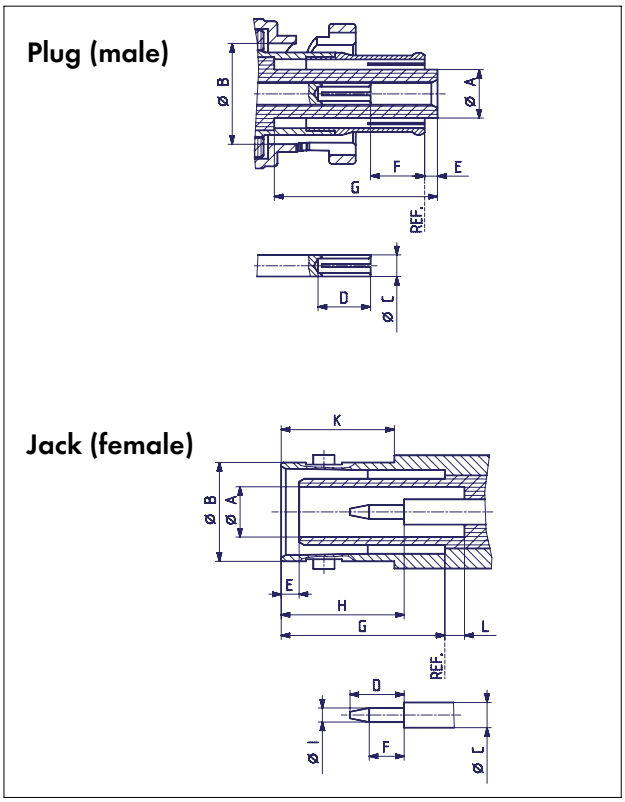

INTERFACE DIMENSIONS (MM / *INCHES*)

	Plug		Jack	
	min.	max.	min.	max.
A	4.57/.180	4.72/.186	4.83/.190	4.98/.196
B	9.78/.385	9.91/.390	9.60/.378	9.70/.382
C	2.06/.081	–	2.06/.081	–
D	5.44/.214	–	5.26/.207	5.44/.214
E	1.17/.046	1.63/.064	1.55/.061	1.98/.078
F	4.42/.174	–	3.30/.130	–
G	15.90/.626	16.10/.634	15.90/.626	16.00/.630
H	–	–	11.59/.456	12.70/.500
I	–	–	1.32/.052	1.37/.054
K	–	–	10.85/.427	–
L	–	–	1.63/.064	2.18/.086

Interface dimensions conformable to the Standards:

International: **IEC 60498, NIM ND-545**
USA: **MIL-STD-348A/314**
ANSI N 24.4

IP rating (interface, mated) IP64

TECHNICAL DATA

ELECTRICAL DATA	REQUIREMENTS
Impedance	50 Ω
Frequency range	DC ... 300 MHz
Dielectric withstanding voltage (at sea level)	5.0 kV rms, 50 Hz (depending on cable)
Working voltage (at sea level)	3.5 V rms, 50 Hz (depending on cable)
Insulation resistance	≥ 10^6 MΩ
Contact resistance - centre contact - outer contact	 ≤ 2 mΩ ≤ 1.5 mΩ
Corona extinction voltage (at 21000 m)	≥ 350 V rms, 50 Hz (depending on cable)
Current rating, continuous	≤ 10 A

MECHANICAL DATA	REQUIREMENTS
Coupling nut torque	7 Ncm ... 28 Ncm / *0.6 in. lbs ... 2.5 in. lbs*
Coupling nut retention force	≥ 450 N / *101.2 lbs*
Contact captivation	≥ 27 N / *6.1 lbs*
Cable retention force[1)]	see pages 28 – 34
Durability (matings)	≥ 500

1) Value considers maximum load of the cables without irreversible variations of specifications.

ENVIRONMENTAL DATA	TEST CONDITIONS (PTFE)	TEST CONDITIONS (POLYSTYROL)
Temperature range	– 65°C ... + 165°C / – 85 °F ... + 329 °F	– 55°C ... + 100°C / – 67 °F ... + 212 °F
Climatic category	IEC → 55/155/21	
Thermal shock	MIL-STD-202, Method 107, Condition B	
Moisture resistance	MIL-STD-202, Method 103, Condition B	
Corrosion	Saltspray test acc. to MIL-STD-202, Method 101, Condition B	
Vibration	MIL-STD-202, Method 204, Condition A	
Shock	MIL-STD-202, Method 213, Condition I	
Radiation resistance (with polystyrene dielectric)	≥ 10^9 rad	

MATERIAL DATA		
CONNECTOR PARTS	**MATERIAL**	**PLATING**
Bodies	brass	SUCOPLATE®
Pin contacts	brass	gold
Socket contacts	copper-beryllium alloy	gold
Crimp ferrules	copper	SUCOPLATE®
Insulators	PTFE or PFA	
Insulators (radiation resistant types)	polystyrol, crosslinked	

Some connectors may have a specification that differs from the above mentioned data.

The products are designed and guaranteed to pass the above mentioned test procedures. Any additional or different requirement arising from specific applications or environmental conditions which is not covered by these test procedures is subject to request.

CABLE CONNECTORS

Straight cable plugs (male)

> HUBER+SUHNER® full crimp

> taper sleeves see page 406

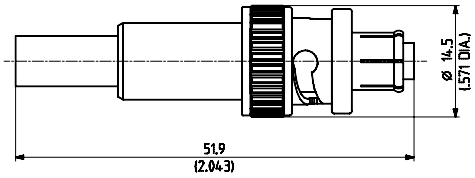

HUBER+SUHNER type	Item no.	Cable group (example)	Packaging	Assembly instruction	Crimp insert
11_SHV-50-3-1/133_NE	**22541987**	U7 (RG 58 C/U)	single	3092	2 B
11_SHV-50-4-1/133_NE	**22541992**	U16 (RG 59 B/U)	single	3092	2 C

> cable entry clamp

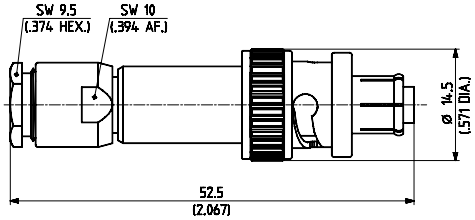

HUBER+SUHNER type	Item no.	Cable group (example)	Packaging	Assembly instruction	Notes
11_SHV-50-3-10/133_NE	**22541990**	U7 (RG 58 C/U)	single	3094	
11_SHV-50-4-10/133_NE	**22541996**	U15 (RG 59 B/U)	single	3094	

Straight cable jacks (female)

> HUBER+SUHNER® full crimp

> taper sleeves see page 406

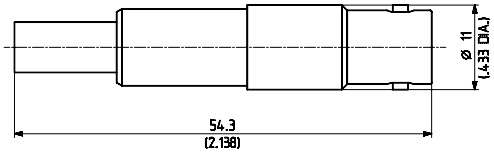

HUBER+SUHNER type	Item no.	Cable group (example)	Packaging	Assembly instruction	Crimp insert
21_SHV-50-3-1/133_NE	**22541998**	U7 (RG 58 C/U)	single	3092	2 B
21_SHV-50-4-1/133_NE	**22542001**	U16 (RG 59 B/U)	single	3092	2 C

Cable groups see page 28 | Assembly tools see page 385 | Mounting holes see page 412

Straight bulkhead cable jacks (female)

> HUBER+SUHNER® full crimp

> with panel seal

> taper sleeves see page 406

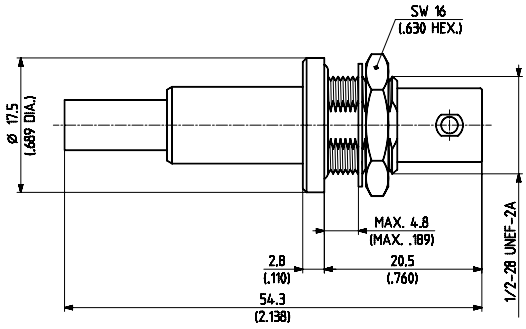

HUBER+SUHNER type	Item no.	Cable group (example)	Packaging	Assembly instruction/ Mounting hole	Crimp insert
24_SHV-50-3-1/133_NE	**22641281**	U7 (RG 58 C/U)	single	3092 / ML 4	2 B
24_SHV-50-4-1/133_NE	**22544592**	U16 (RG 59 B/U)	single	3092 / ML 4	2 C

RECEPTACLES WITH SOLDER END

Receptacles, jacks (female)

> bulkhead mounted

> without panel seal

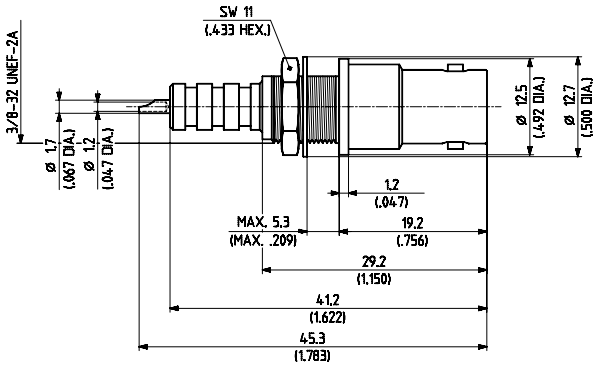

HUBER+SUHNER type	Item no.	Packaging	Mounting hole	Insulator	Notes
22_SHV-50-0-2/133_NE	**22544054**	single	ML 2	PTFE	
22_SHV-50-0-6/133_NE	**22542007**	single	ML 2	polystyrol	radiation resistant

Cable groups see page 28 Assembly tools see page 385 Mounting holes see page 412

> bulkhead mounted

> hermetically sealed

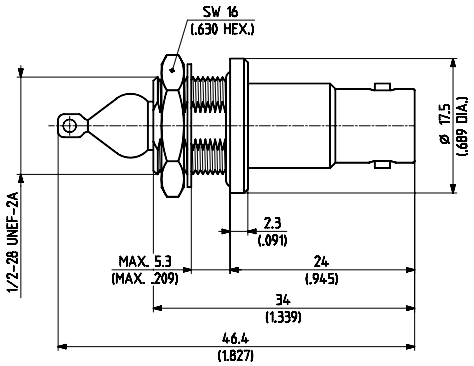

HUBER+SUHNER type	Item no.	Packaging	Mounting hole	Plating body	Notes
22_SHV-50-0-3/100_NE *	**22543968**	single	ML 4	silver	leak rate 10^{-6} Torr l/sec.*(atm cc/s)*

> panel mounted

> fastening screws see page 407

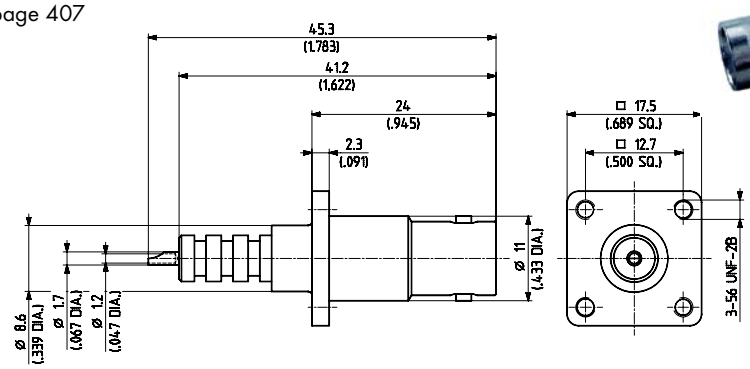

HUBER+SUHNER type	Item no.	Packaging	Mounting hole	Notes
23_SHV-50-0-1/133_NE	**22542008**	single	ML 106	mounting also possible with screws ISO M 2.5

> panel mounted

> fastening screws see page 407

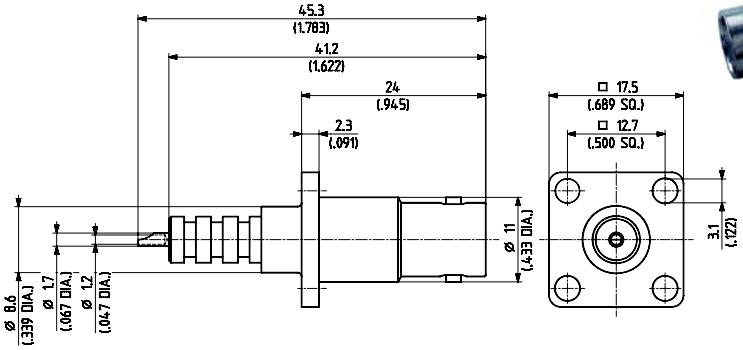

HUBER+SUHNER type	Item no.	Packaging	Mounting hole	Notes
23_SHV-50-0-2/133_NE	**22542010**	single	ML 106	

* RoHS compliant alternative on request

Cable groups see page 28 | Assembly tools see page 385 | Mounting holes see page 412

SERIES MHV (H4) HIGH VOLTAGE CONNECTORS

DESCRIPTION

HUBER+SUHNER MHV connectors are coaxial miniature high voltage (MHV = Miniature High Voltage) connectors with 5 kV rms test voltage (mated pairs). The MHV connectors have a working voltage up to 1.6 kV rms in mated condition and are suitable for applications up to 300 MHz. MHV connectors are of similar design to BNC connectors but the insulators protrude over the outer contacts to give a degree of contact-voltage proof when unmated.
However, if a high degree of protection in the unmated condition is required, use of series SHV is recommended.

CONTENTS PAGE

INTERFACE DIMENSIONS

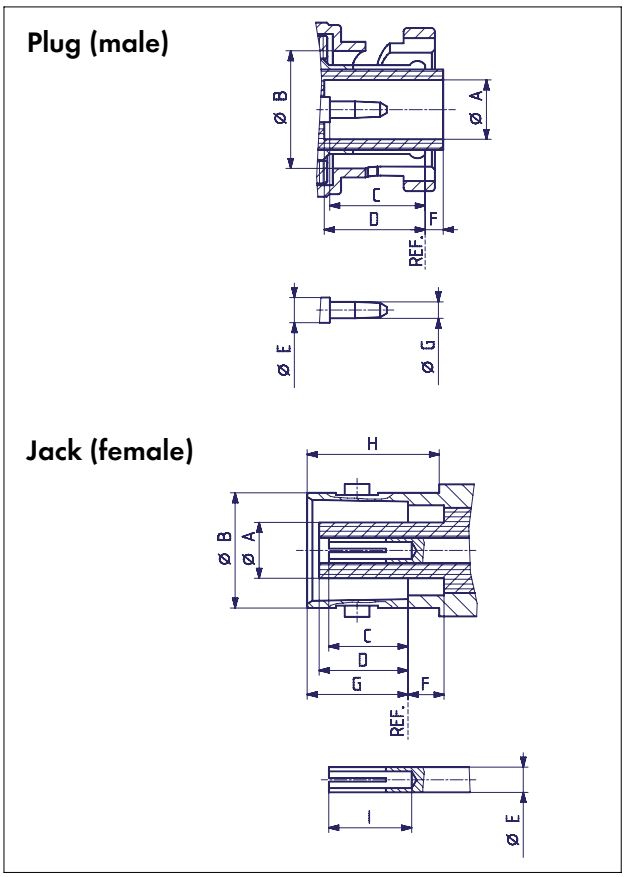

INTERFACE DIMENSIONS (*MM / INCHES*)

	Plug		Jack	
	min.	max.	min.	max.
A	4.83/.190	–	–	4.72/.186
B	9.78/.385	9.91/.390	9.60/.378	9.70/.382
C	7.18/.283	–	–	7.11/.280
D	8.10/.319	–	–	8.05/.317
E	–	2.31/.091	2.06/.081	2.31/.091
F	–	2.18/.086	2.18/.086	–
G	1.32/.052	1.37/.054	8.31/.327	8.51/.335
H	–	–	10.52/.414	–
I	–	–	6.86/.270	–

IP rating (interface, mated) IP64

TECHNICAL DATA

ELECTRICAL DATA	REQUIREMENTS
Impedance	50 Ω
Frequency range	DC ... 300 MHz
Dielectric withstanding voltage (at sea level)	5.0 kV rms, 50 Hz (depending on cable)
Working voltage (at sea level)	1.6 V rms, 50 Hz (depending on cable)
Insulation resistance	$\geq 5 \cdot 10^6$ MΩ
Contact resistance - centre contact - outer contact	 ≤ 2 mΩ ≤ 1 mΩ
Corona extinction voltage (at 21000 m)	≥ 300 V rms, 50 Hz (depending on cable)
Current rating, continuous	≤ 10 A

MECHANICAL DATA	REQUIREMENTS
Coupling nut torque	7 Ncm ... 28 Ncm / *0.6 in. lbs ... 2.5 in. lbs*
Coupling nut retention force	≥ 450 N / *101.2 lbs*
Contact captivation	≥ 15 N / *6.1 lbs*
Cable retention force[1)]	see pages 28 – 34
Durability (matings)	≥ 500

1) Value considers maximum load of the cables without irreversible variations of specifications.

ENVIRONMENTAL DATA	TEST CONDITIONS
Temperature range	– 65°C ... + 165°C / – 85 °F ... + 329 °F
Climatic category	IEC → 55/155/21
Thermal shock	MIL-STD-202, Method 107, Condition B
Moisture resistance	MIL-STD-202, Method 106
Corrosion	Saltspray test acc. to MIL-STD-202, Method 101, Condition B
Vibration	MIL-STD-202, Method 204, Condition B

MATERIAL DATA		
CONNECTOR PARTS	**MATERIAL**	**PLATING**
Bodies	brass	SUCOPLATE®
Pin contacts	brass	gold
Socket contacts	copper-beryllium alloy	gold
Crimp ferrules	copper	SUCOPLATE®
Insulators	PTFE or PFA	

Some connectors may have a specification that differs from the above mentioned data.

The products are designed and guaranteed to pass the above mentioned test procedures. Any additional or different requirement arising from specific applications or environmental conditions which is not covered by these test procedures is subject to request.

CABLE CONNECTORS

Straight cable plugs (male)

> cable entry clamp

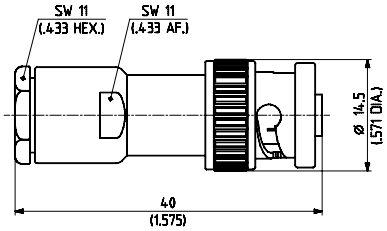

HUBER+SUHNER type	Item no.	Cable group (example)	Packaging	Assembly instruction	Notes
11_H4-50-3-1/133_NE ⊞	**22541732**	U7 (RG 58 C/U)	single	3012	
11_H4-50-4-1/133_NE ⊞	**22541742**	U15 (RG 59 B/U)	single	3012	

> cable entry crimp

> taper sleeves see page 406

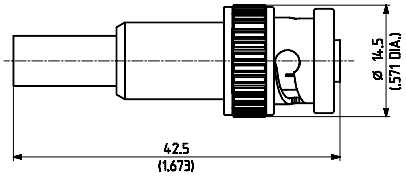

Fig. 1

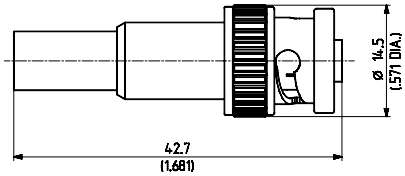

Fig. 2

HUBER+SUHNER type	Item no.	Cable group (example)	Packaging	Assembly instruction	Crimp insert	Fig.
11_H4-50-3-3/133_NE ⊞	**22541737**	U7 (RG 58 C/U)	single	3078	B	1
11_H4-50-4-4/133_NE ⊞	**22543809**	U16 (RG 59 B/U)	single	3078	C	2

Straight cable jacks (female)

> cable entry clamp

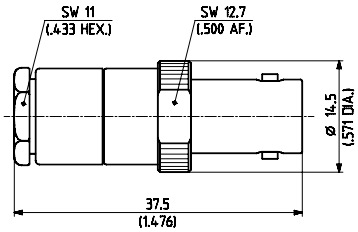

HUBER+SUHNER type	Item no.	Cable group (example)	Packaging	Assembly instruction	Notes
21_H4-50-3-1/133_NE ⊞	**22541756**	U7 (RG 58 C/U)	single	3012	

⊞ **centre contact NOT captivated**

Cable groups see page 28 | Assembly tools see page 385 | Mounting holes see page 412

Straight bulkhead cable jacks (female)

> cable entry clamp

> with panel seal

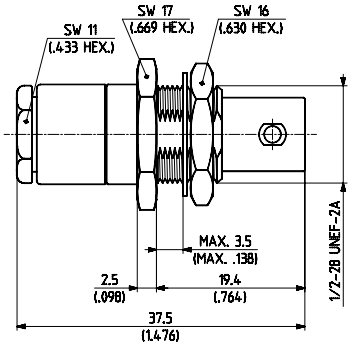

HUBER+SUHNER type	Item no.	Cable group (example)	Packaging	Assembly instruction/ Mounting hole
24_H4-50-3-1/133_NE ⊞	**22541784**	U7 (RG 58 C/U)	single	3012 / ML 4

RECEPTACLES WITH SOLDER END

Receptacles, jacks (female)

> bulkhead mounted

> with panel seal

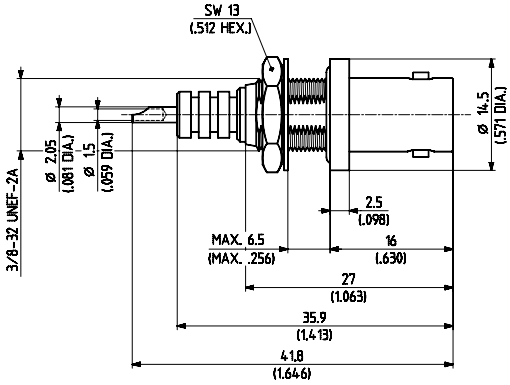

HUBER+SUHNER type	Item no.	Packaging	Mounting hole	Notes
22_H4-50-0-1/133_NE	**22652095**	single	ML 1	

> bulkhead mounted

> hermetically sealed

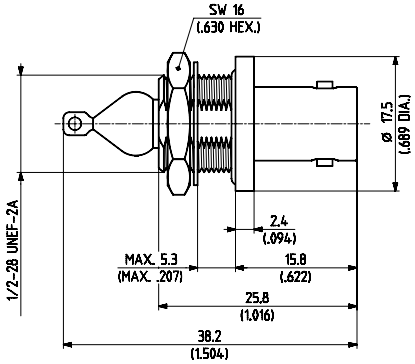

HUBER+SUHNER type	Item no.	Packaging	Mounting hole	Plating body	Notes
22_H4-50-0-6/100_NE *	**22541764**	single	ML 4	silver	leak rate 10^{-6} Torr l/sec.(*atm cc/s*) max.

⊞ **centre contact NOT captivated**

* RoHs compliant alternative on request

Cable groups see page 28 Assembly tools see page 385 Mounting holes see page 412

Receptacles, plugs (male)

> bulkhead mounted

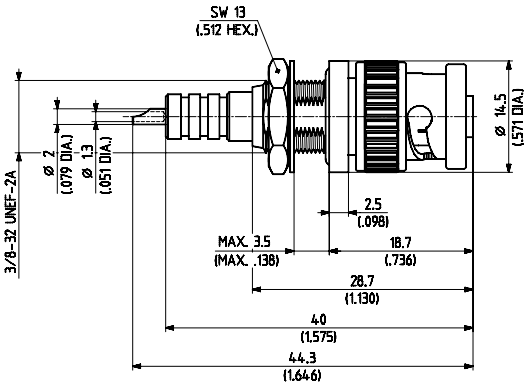

HUBER+SUHNER type	Item no.	Packaging	Mounting hole	Notes
12_H4-50-0-1/133_NE	**22543467**	single	ML 2	with panel seal

Flange mount, jacks (female)

> panel mounted

> fastening screws see page 407

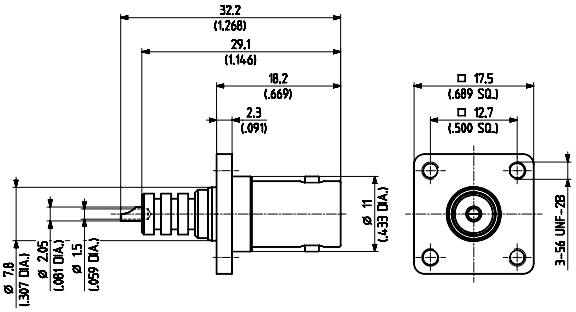

Fig. 1

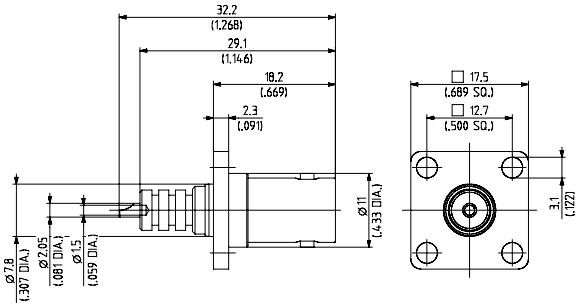

Fig. 2

HUBER+SUHNER type	Item no.	Packaging	Mounting hole	Notes	Fig.
23_H4-50-0-7/133_NE	**22541776**	single	ML 6	mounting also possible with screws ISO M 2.5	1
23_H4-50-0-8/133_NE	**22541779**	single	ML 6		2

Cable groups see page 28 | Assembly tools see page 385 | Mounting holes see page 412

SERIES N 50 Ω, COAXIAL CONNECTORS

DESCRIPTION

HUBER+SUHNER N connectors are available with 50 Ω and 75 Ω impedance. The frequency range extends to 18 GHz, depending on the connector and cable type. The screw-type coupling mechanism provides a sturdy and reliable connection.
HUBER+SUHNER N connectors are available for flexible cables, for semi-rigid cables and for corrugated copper tube cables.
Cable entries: clamp, crimp and solder types available, as well as HUBER+SUHNER QUICK-FIT for corrugated copper tube cables.

Compatibility

Inner conductors of N 75 Ω connectors have a smaller diameter than those of the 50 Ω version. Therefore 50 Ω and 75 Ω connectors must not be mated with each other.

CONTENTS PAGE

INTERFACE DIMENSIONS

Plug (male)

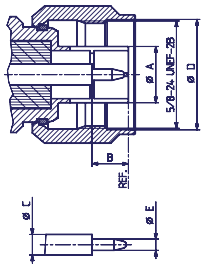

Jack (female)

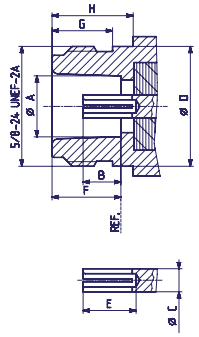

INTERFACE DIMENSIONS (MM / *INCHES*)

	Plug		Jack	
	min.	max.	min.	max.
A	–	8.38/.330	8.03/.316	8.13/.320
B	5.33/.210	5.84/.230	4.75/.187	5.26/.207
C	–	3.15/.124	–	3.15/.124
D	16.00/.630	–	–	15.93/.627
E	1.60/.063	1.68/.066	5.33/.210	–
F	–	–	9.04/.356	9.19/.362
G	–	–	6.76/.266	–
H	–	–	10.72/.422	–

Interface dimensions conformable to the Standards:

International: **IEC 61169-16**
Europe: **CECC 22 210**
USA: **MIL-STD-348A/304**

IP rating (interface, mated) IP68

TECHNICAL DATA

ELECTRICAL DATA	REQUIREMENTS
Impedance	50 Ω
Frequency range - flexible cables - semi-rigid cables	 DC ... 11 GHz DC ... 18 GHz
Dielectric withstanding voltage (at sea level)	2.5 kV rms, 50 Hz
Working voltage (at sea level)	≤ 1.0 kV rms, 50 Hz
Insulation resistance	≥ $5 \cdot 10^3$ MΩ
Contact resistance - centre contact - outer contact	 ≤ 1.0 mΩ ≤ 1.0 mΩ
RF-leakage (between 2 ÷ 3 GHz)	≥ 90 dB
VSWR	see table below

TYPICAL VSWR*	FREQUENCY RANGE					
CONNECTOR TYPE	1 GHz	2.5 GHz	5 GHz	12.4 GHz	18 GHz	CABLE GROUP
straight connectors	1.04	1.05	1.08			M6
	1.03	1.04	1.06	1.12		Y5, Y12
	1.03	1.04	1.05	1.07	1.09	Y5, Y12
	1.03	1.04	1.05	1.08	1.12	Y7
	1.05	1.09	1.17			U7, U9
	1.04	1.06	1.12			U28, U29, U32, U33
	1.03	1.05	1.14			S24
	1.03	1.05	1.10			S39
right angle connectors	1.04	1.05	1.08			M6
	1.04	1.05	1.06	1.12		Y5, Y12
	1.05	1.10	1.20			U7, U9
	1.08	1.10	1.12			U28, U29, U32, U33

* Values which can be achieved when connectors are perfectly fixed onto cable.

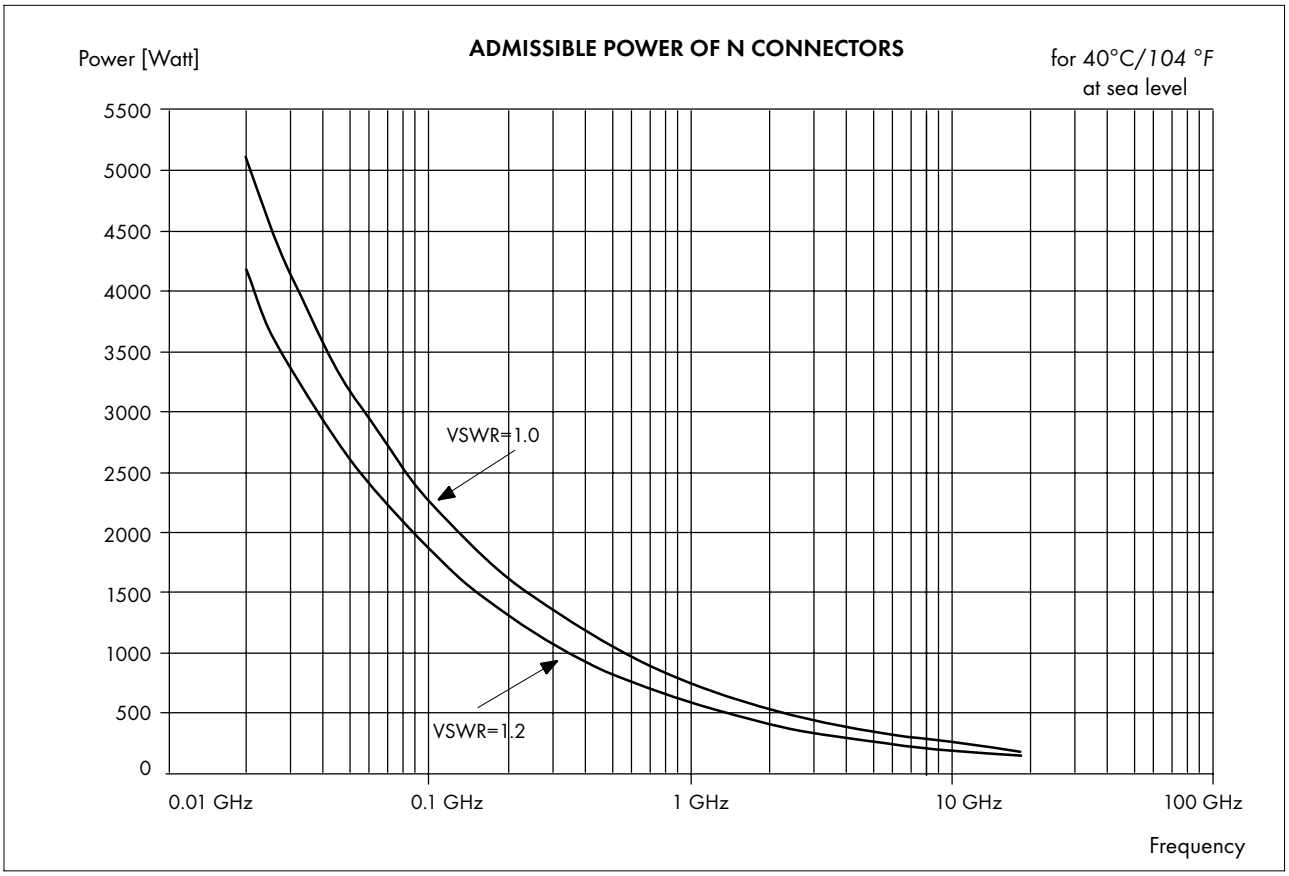

MECHANICAL DATA	REQUIREMENTS					
Coupling nut torque - recommended - proof torque	 0.68 Nm ... 1.13 Nm / *6.0 ... 10.0 in. lbs* 1.70 Nm / *15.0 in. lbs*					
Coupling nut retention force	≥ 450 N / *101.2 lbs*					
Contact captivation	≥ 28 N / *6.3 lbs*					
Cable retention force[1)]	see pages 28 – 34					
Durability (matings)	≥ 500					
- recommended torque for connectors with profile HEX19 (HEX18) coupling nut	Matings	500	250	100	60	30
	Torque	1 Nm	2 Nm	3 Nm	4 Nm	5 Nm

1) value considers maximum load of the cables without irreversible variations of specifications.

ENVIRONMENTAL DATA	TEST CONDITIONS
Temperature range	– 65°C ... + 165°C / – 85 °F ... + 329 °F
Climatic category	IEC → 55/155/21
Thermal shock	MIL-STD-202, Method 107, Condition B
Moisture resistance	MIL-STD-202, Method 106
Corrosion	Saltspray test acc. to MIL-STD-202, Method 101, Condition B
Vibration	MIL-STD-202, Method 204, Condition B
Shock	MIL-STD-202, Method 213, Condition I

MATERIAL DATA		
CONNECTOR PART	MATERIAL	PLATING
Bodies	brass	SUCOPLATE®
Pin contacts	brass	gold / SUCOPRO
Outer contact, slotted	spring bronze	SUCOPLATE®
Female contacts	copper-beryllium alloy; spring bronze	gold / SUCOPRO
Crimp ferrules	copper	SUCOPLATE®
Insulators, standard version	PTFE or PFA	
Gaskets	silicone rubber	

Some connectors may have a specification that differs from the above mentioned data.

The products are designed and guaranteed to pass the above mentioned test procedures. Any additional or different requirement arising from specific applications or environmental conditions which is not covered by these test procedures is subject to request.

CABLE CONNECTORS

Straight cable plugs (male)

> for semi-rigid cables

> cable entry soldered

> centre contact soldered

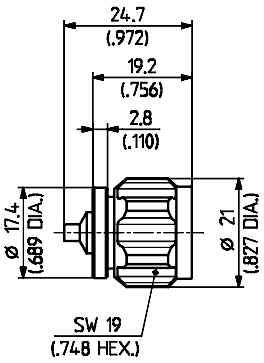

Fig. 1

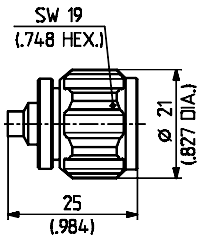

Fig. 2

HUBER+SUHNER type	Item no.	Cable group (example)	Packaging	Assembly instruction	Weight	Fig.
11_N-50-2-15/113_UE	**22660315**	Y3, Y11 (EZ 86)	single	3095	25.6 g/0.90 oz.	1
11_N-50-3-13/113_NE	**22542083**	Y5, Y12 (EZ 141)	single	3095	29.0 g/1.02 oz.	2

> for SUCOFORM cables

> cable entry soldered

> centre contact soldered

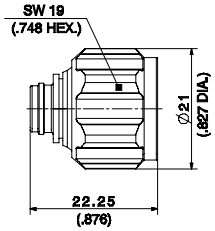

HUBER+SUHNER type	Item no.	Cable group (example)	Packaging	Assembly instruction	Weight	Fig.
11_N-50-5-18/103_NH	**84008445**	Y13 (Sucoform 250-01)	bulk 100 pcs.	0000215552	21.9 g/0.77 oz.	1

Cable groups see page 28 | Assembly tools see page 385 | Mounting holes see page 412

> for semi-rigid cables

> cable entry soldered (Fig. 1)

> cable entry clamp (Fig. 2)

> centre contact plugged-in

> frequency range: DC - 18 GHz

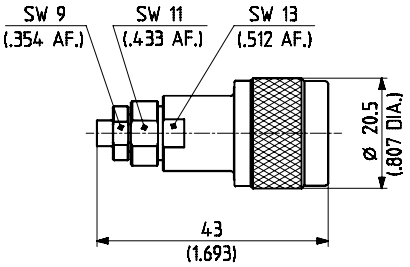

Fig. 1

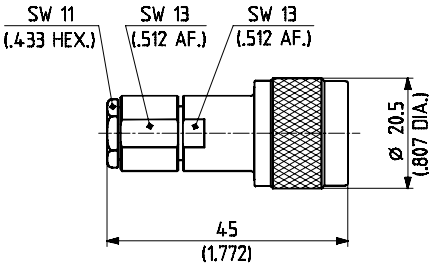

Fig. 2

HUBER+SUHNER type	Item no.	Cable group (example)	Packaging	Assembly instruction	Weight	Fig.
11_N-50-3-51/133_NE	**22543919**	Y5, Y12 (EZ 141)	single	9006	43.0 g/*1.51* oz.	1 *
11_N-50-5-39/133_NE	**22642481**	Y7 (EZ 250)	single	9089	51.0 g/*1.79* oz.	2

* stainless steel

> for flexible cables

> cable entry clamp

> centre contact soldered

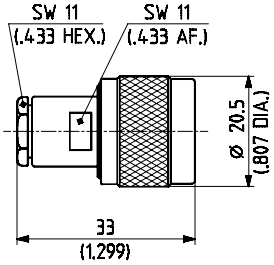

HUBER+SUHNER type	Item no.	Cable group (example)	Packaging	Assembly instruction	Weight
11_N-50-2-1/133_NE	**22544030**	U2 (RG 316/U)	single	3017	38.0 g/*1.33* oz.
11_N-50-2-2/133_NE	**22643807**	U4 (K 02252 D)	single	3017	38.0 g/*1.33* oz.
11_N-50-3-5/133_NE	**22542073**	U7, 10 (RG 58C/U)	single	3017	36.0 g/*1.26* oz.

Precision Connector - low VSWR

> for flexible cables

> cable entry clamp

> centre contact soldered

> VSWR: DC-4 GHz ≤ 1.10 | 4-10 GHz ≤ 1.20 | 10-12.4 GHz ≤ 1.25

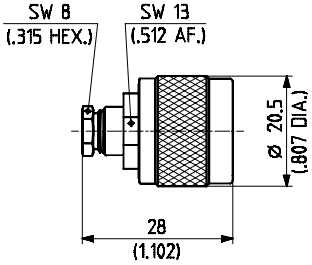

HUBER+SUHNER type	Item no.	Cable group (example)	Packaging	Assembly instruction	Weight
11_N-50-3-54/133_NE	**22642009**	RG 223/U only	single	9099	32.0 g/*1.12* oz.

Cable groups see page 28 | Assembly tools see page 385 | Mounting holes see page 412

> for flexible cables

> cable entry clamp

> centre contact soldered

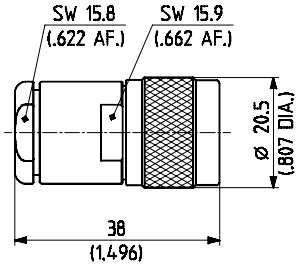

HUBER+SUHNER type	Item no.	Cable group (example)	Packaging	Assembly instruction	Weight
11_N-50-7-5/133_NE ⊞	**22542117**	U33, 28 (RG 214/U)	single	3007	51.0 g/1.79 oz.
11_N-50-7-6/133_NE	**22542120**	U33, 28 (RG 214/U)	single	3008	51.0 g/1.79 oz.

⊞ **centre contact NOT captivated**

› for flexible cables

› HUBER+SUHNER® full crimp

› taper sleeves see page 406

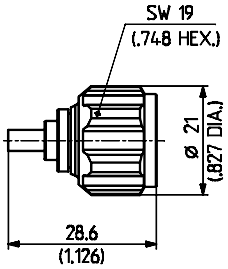

HUBER+SUHNER type	Item no.	Cable group (example)	Packaging	Assembly instruction	Crimp insert	Weight
11_N-50-2-11/133_NH	**22658813**	U2 (RG 316/U)	bulk 100 pcs.	9068	1 A	26.5 g/0.93 oz.
11_N-50-2-16/133_NE	**23014128**	U4 (K 02252 D)	single	9068	1 A	25.4 g/0.89 oz.

> for flexible cables

> HUBER+SUHNER® full crimp

> taper sleeves see page 406

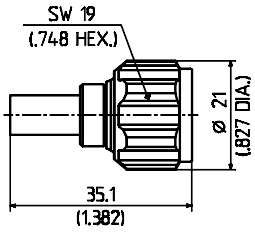

Fig. 1

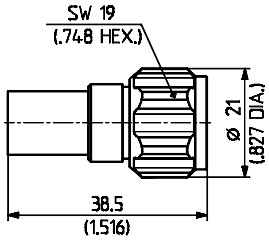

Fig. 2

HUBER+SUHNER type	Item no.	Cable group (example)	Packaging	Assembly instruction	Crimp insert	Weight	Fig.
11_N-50-3-28/133_NE	**22642842**	U7 (RG 58 C/U)	single	3015	2 B	23.0 g/0.81 oz.	1
11_N-50-3-29/133_NE	**22642843**	U9 (RG 223/U)	single	3015	2 B	23.0 g/0.81 oz.	1
11_N-50-3-31/133_NE	**22648829**	U11 (RG 400/U)	single	3015	2 B	28.0 g/0.98 oz.	1
11_N-50-3-31/133_NH	**22650658**	U11 (RG 400/U)	bulk 100 pcs.	3015	2 B	28.0 g/0.98 oz.	1
11_N-50-4-63/133_NE	**22652069**	S16 (S 04262 D)	single	3015	2 C	27.3 g/0.96 oz.	1
11_N-50-6-1/133_NE	**22642488**	U25 (S 06132D)	single	27035	3 D	34.0 g/1.19 oz.	2

Cable groups see page 28 | Assembly tools see page 385 | Mounting holes see page 412

> for flexible cables

> HUBER+SUHNER® full crimp

> taper sleeves see page 406

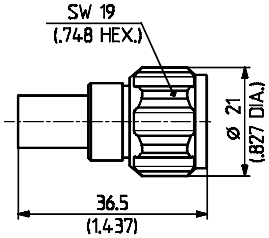

HUBER+SUHNER type	Item no.	Cable group (example)	Packaging	Assembly instruction	Crimp insert	Weight
11_N-50-6-5/133_NE	**22648674**	S26 (S 06132 D-10)	single	27082	3/8.65	31.0 g/1.09 oz.

> for flexible cables

> cable entry crimp

> centre contact plugged-in

> taper sleeves see page 406

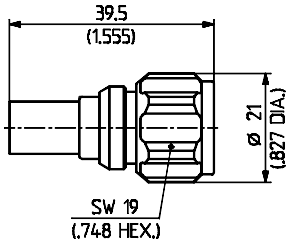

HUBER+SUHNER type	Item no.	Cable group (example)	Packaging	Assembly instruction	Crimp insert	Weight
11_N-50-6-10/133_NH	**22660330**	S24 (S 06162 D-02)	bulk 100 pcs.	27091	8.65	29.5 g/1.03 oz.

> for flexible cables

> HUBER+SUHNER® full crimp

> taper sleeves see page 406

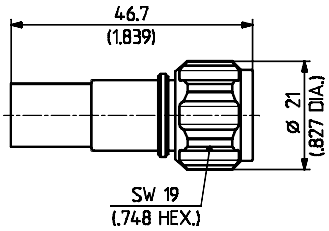

Fig. 1

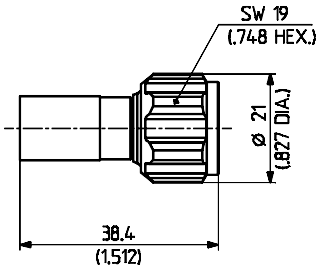

Fig. 2

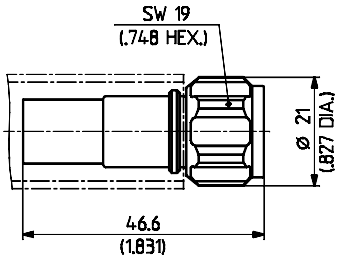

Fig. 3

HUBER+SUHNER type	Item no.	Cable group (example)	Packaging	Assembly instruction	Crimp insert	Weight	Fig.
11_N-50-7-33/133_NE	**22641614**	U30 (S 07232)	single	9067	4 D	39.0 g/1.37 oz.	1
11_N-50-7-43/133_NE	**22642844**	U29 (RG 213/U)	single	3061	3 D	28.0 g/0.98 oz.	2
11_N-50-7-44/133_NE	**22642845**	U32 (RG 214/U)	single	3061	3 D	28.0 g/0.98 oz.	2
11_N-50-7-49/133_NE	**22652111**	S32 (S 07262 BD)	single	9067	4 D	40.0 g/1.40 oz.	3
11_N-50-7-61/133_NE	**22651793**	U33 (RG 393/U)	single	27070	2.5 D	28.5 g/1.00 oz.	2

Cable groups see page 28 | Assembly tools see page 385 | Mounting holes see page 412

> for flexible cables

> cable entry crimp

> centre contact plugged-in

> degree of protection IP 67

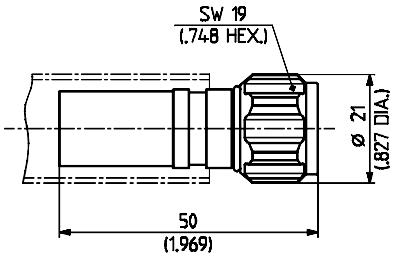

HUBER+SUHNER type	Item no.	Cable group (example)	Packaging	Assembly instruction	Crimp insert	Weight
11_N-50-10-5/103_UV	**23002543**	S39 (S 10162 B-11)	bulk 20 pcs.	27356	12.4	37.8 g/1.32 oz.

Right angle cable plugs (male)

> for semi-rigid cables

> cable entry soldered

> centre contact soldered

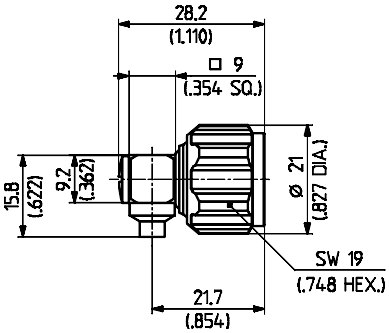

HUBER+SUHNER type	Item no.	Cable group (example)	Packaging	Assembly instruction	Weight
16_N-50-3-15/133_NE	**22648832**	Y5 (EZ 141)	single	9200	29.1 g/1.02 oz.

Cable groups see page 28 | Assembly tools see page 385 | Mounting holes see page 412

> for flexible cables

> cable entry clamp

> centre contact soldered

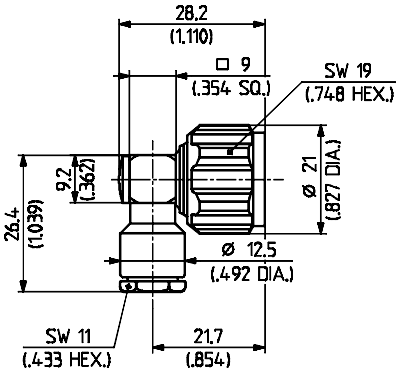

Fig. 1

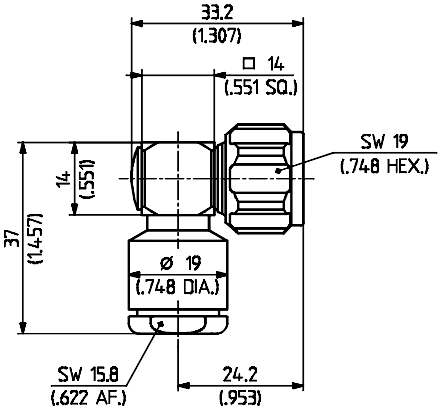

Fig. 2

HUBER+SUHNER type	Item no.	Cable group (example)	Packaging	Assembly instruction	Weight	Fig.
16_N-50-3-103/133_NE	**22651610**	U10, U7 (RG 223/U)	single	27060	37.0 g/1.30 oz.	1
16_N-50-7-26/133_NE	**22650825**	U28,U33 (RG 213/U)	single	27121	65.0 g/2.28 oz.	2

> for flexible cables

> cable entry crimp

> centre contact soldered

> taper sleeves see page 406

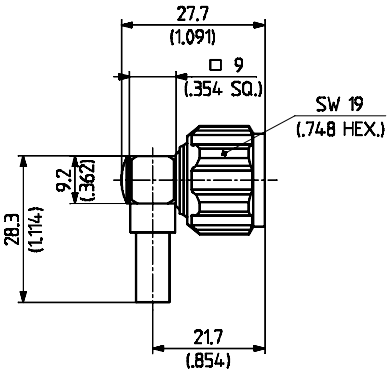

Fig. 1

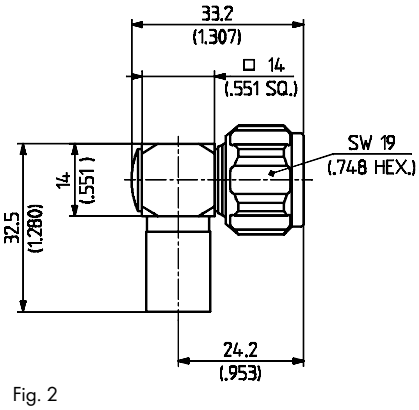

Fig. 2

HUBER+SUHNER type	Item no.	Cable group (example)	Packaging	Assembly instruction	Crimp insert	Weight	Fig.
16_N-50-3-26/133_NE	**22642846**	U7 (RG 58 C/U)	single	3058	B	27.0 g/0.95 oz.	1
16_N-50-3-27/133_NE	**22642847**	U9 (RG 223/U)	single	3058	B	27.0 g/0.95 oz.	1
16_N-50-3-27/133_NH	**22650168**	U9 (RG 223/U)	bulk 100 pcs.	3058	B	27.0 g/0.95 oz.	1
16_N-50-7-30/133_NE	**22642848**	U29 (RG 213/U)	single	3076	D	42.0 g/1.47 oz.	2
16_N-50-7-31/133_NE	**22642849**	U32 (RG 214/U)	single	3076	D	42.0 g/1.47 oz.	2

Cable groups see page 28 Assembly tools see page 385 Mounting holes see page 412

> for flexible cables

> cable entry crimp

> centre contact soldered

> taper sleeves see page 406

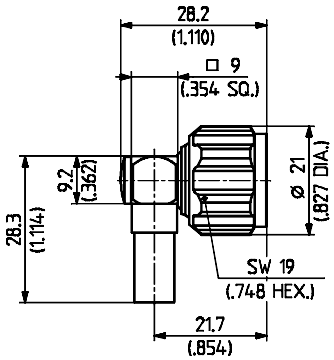

HUBER+SUHNER type	Item no.	Cable group (example)	Packaging	Assembly instruction	Crimp insert	Weight
16_N-50-4-14/133_NE	**23015067**	S16 (S 04262 D)	single	3058	C	31.7 g/1.11 oz.

> for flexible cables

> cable entry crimp

> centre contact soldered

> taper sleeves see page 406

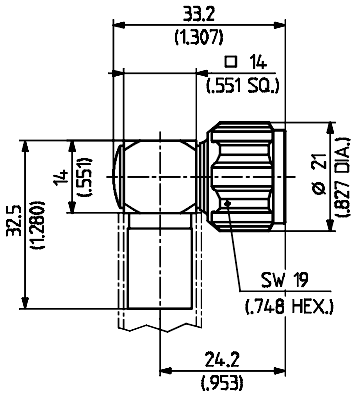

HUBER+SUHNER type	Item no.	Cable group (example)	Packaging	Assembly instruction	Crimp insert	Weight
16_N-50-7-22/133_NE	**22651794**	S32 (S 07262 BD)	single	9094	D	50.0 g/1.75 oz.

> for flexible cables

> cable entry crimp

> centre contact soldered

> degree of protection IP 67

> taper sleeves see page 406

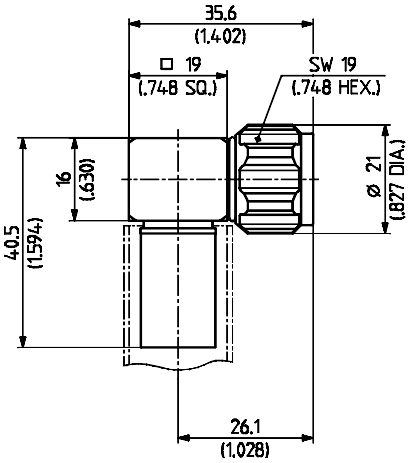

HUBER+SUHNER type	Item no.	Cable group (example)	Packaging	Assembly instruction	Crimp insert	Weight
16_N-50-10-1/103_UV	**23002552**	S39 (S 10162 B-11)	bulk 20 pcs.	27357	12.4	50.0 g/1.75 oz. *

* centre contact not nickel underplated

Cable groups see page 28 | Assembly tools see page 385 | Mounting holes see page 412

> for flexible cables

> HUBER+SUHNER® full crimp

> taper sleeves see page 406

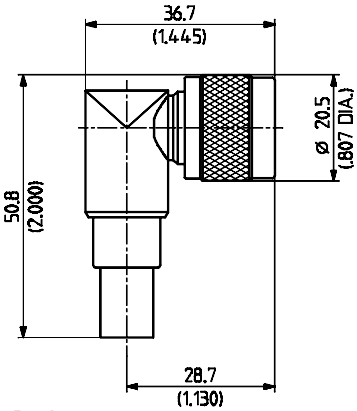

Fig. 1

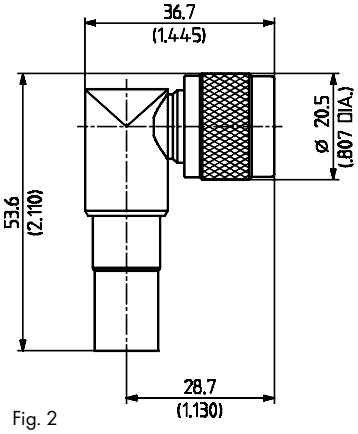

Fig. 2

HUBER+SUHNER type	Item no.	Cable group (example)	Packaging	Assembly instruction	Crimp insert	Weight	Fig.
16_N-50-6-8/133_NE	**22651496**	S26 (S 06132 D-10)	single	27082	3/8.65	63.0 g/2.21 oz.	1
16_N-50-7-28/133_NE	**22652040**	U33 (RG 393/U)	single	27064	4 D	63.6 g/2.23 oz.	2
16_N-50-7-29/133_NE	**22651494**	U29 (RG 213/U)	single	9009	3 D	65.0 g/2.28 oz.	2
16_N-50-7-36/133_NE	**22651495**	U32 (RG 214/U)	single	9009	3 D	66.0 g/2.31 oz.	2

Straight cable jacks (female)

> for semi-rigid cables

> cable entry soldered

> centre contact soldered

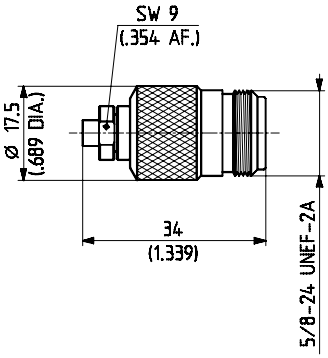

HUBER+SUHNER type	Item no.	Cable group (example)	Packaging	Assembly instruction	Frequency range	Weight
21_N-50-2-14/133_NE ⊞	**22642666**	Y3, Y11 (EZ 86)	single	9073	DC-18 GHz	38.0 g/1.33 oz.
21_N-50-3-11/133_NE ⊞	**22543921**	Y5, Y12 (EZ 141)	single	9005	DC-12.4 GHz	38.0 g/1.33 oz.

⊞ **centre contact NOT captivated**

Cable groups see page 28 | Assembly tools see page 385 | Mounting holes see page 412

> for flexible cables

> cable entry clamp

> centre contact soldered

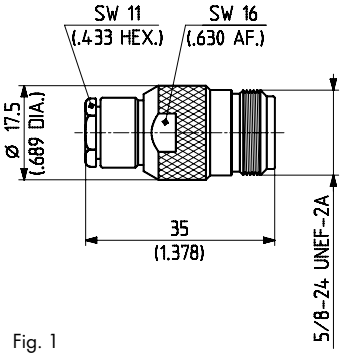

Fig. 1

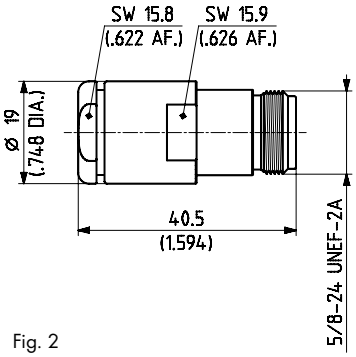

Fig. 2

HUBER+SUHNER type	Item no.	Cable group (example)	Packaging	Assembly instruction	Weight	Fig.
21_N-50-3-5/133_NE	**22543504**	U10, U7 (RG 223/U)	single	3017	38.0 g/1.33 oz.	1
21_N-50-7-8/133_NE	**22542254**	U28,U33 (RG 213/U)	single	3008	50.0 g/1.75 oz.	2

> for flexible cables

> HUBER+SUHNER® full crimp

> taper sleeves see page 406

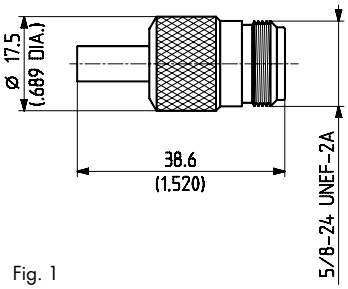

Fig. 1

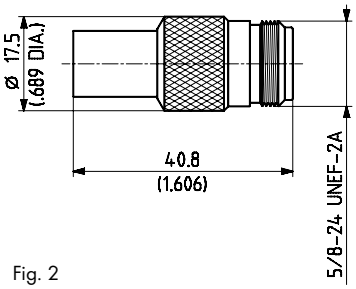

Fig. 2

HUBER+SUHNER type	Item no.	Cable group (example)	Packaging	Assembly instruction	Crimp insert	Weight	Fig.
21_N-50-3-7/133_NE	**22542229**	U7 (RG 58 C/U)	single	3063	2 B	36.0 g/1.26 oz.	1
21_N-50-3-8/133_NE	**22542231**	U9 (RG 223/U)	single	3063	2 B	36.0 g/1.26 oz.	1
21_N-50-3-12/133_NE	**22651795**	U11 (RG 400/U)	single	3063	2 B	35.0 g/1.12 oz.	1
21_N-50-7-13/133_NE	**22542257**	U29 (RG 213/U)	single	3061	3 D	38.0 g/1.33 oz.	2
21_N-50-7-14/133_NE	**22542258**	U32 (RG 214/U)	single	3061	3 D	37.0 g/1.30 oz.	2

Cable groups see page 28 Assembly tools see page 385 Mounting holes see page 412

> for flexible cables

> HUBER+SUHNER® full crimp

> taper sleeves see page 406

> degree of protection IP 66

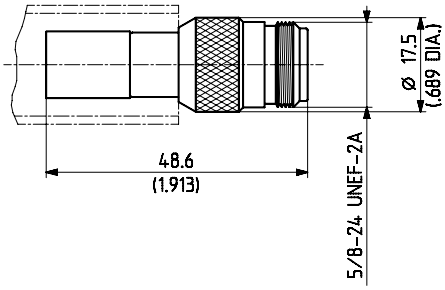

HUBER+SUHNER type	Item no.	Cable group (example)	Packaging	Assembly instruction	Crimp insert	Weight
21_N-50-7-20/133_NE	**22651796**	S32 (S 07262 BD)	single	9067	4 D	37.0 g/1.30 oz.

> for flexible cables

> cable entry crimp

> centre contact plugged-in

> degree of protection IP 67

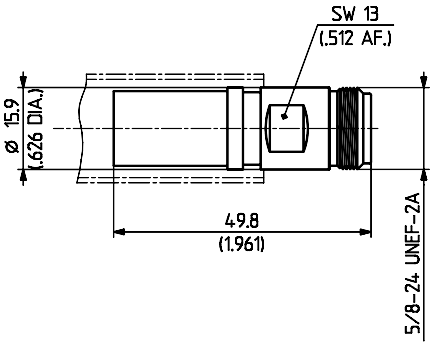

HUBER+SUHNER type	Item no.	Cable group (example)	Packaging	Assembly instruction	Crimp insert	Weight
21_N-50-10-1/133_UF	**23003072**	S39 . . (S 10162 B-11)	bulk 50 pcs.	27356	12.4	38.1 g/1.33 oz. *

* centre contact not nickel underplated

Straight bulkhead cable jacks (female)

> for semi-rigid cables

> cable entry soldered

> centre contact soldered

> with panel seal

> insulating washers see page 408

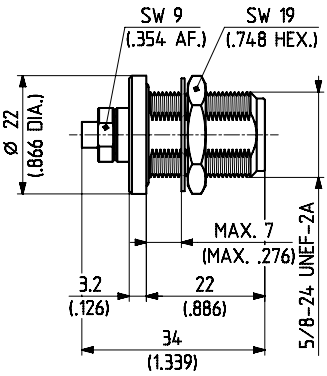

HUBER+SUHNER type	Item no.	Cable group (example)	Packaging	Assembly instruction	Frequency range	Weight
24_N-50-2-14/133_NE	**22544637**	Y3, Y11 (EZ 86)	single	9073	DC-12.4 GHz	39.0 g/1.37 oz.
24_N-50-3-14/133_NE	**22542300**	Y5, Y12 (EZ 141)	single	9005	DC-12.4 GHz	39.0 g/1.37 oz.

mounting hole ML 12

Cable groups see page 28 | Assembly tools see page 385 | Mounting holes see page 412

> for semi-rigid cables

> cable entry soldered

> centre contact plugged-in

> body material: stainless steel

> with panel seal

> insulating washers see page 408

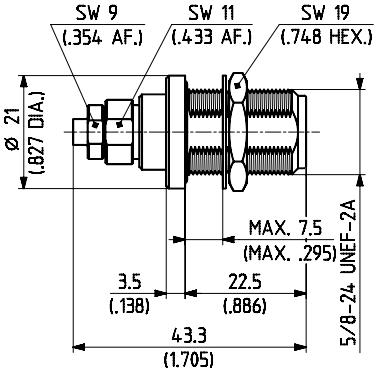

HUBER+SUHNER type	Item no.	Cable group (example)	Packaging	Assembly instruction	Frequency range	Weight
24_N-50-3-51/19-_NE	**22642344**	Y5, Y12 (EZ 141)	single	9006	DC-18 GHz	45.0 g/1.58 oz.

mounting hole ML 12

> for flexible cables

> cable entry clamp

> centre contact soldered

> with panel seal

> insulating washers see page 408

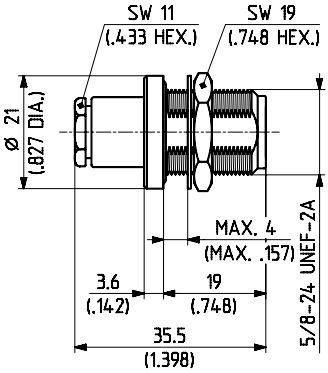

HUBER+SUHNER type	Item no.	Cable group (example)	Packaging	Assembly instruction/ Mounting hole	Weight
24_N-50-2-1/133_NE	**22641239**	U2 (RG 316/U)	single	9150 / ML 12	42.0 g/1.47 oz.

> for flexible cables

> cable entry clamp

> centre contact soldered

> with panel seal

> insulating washers see page 408

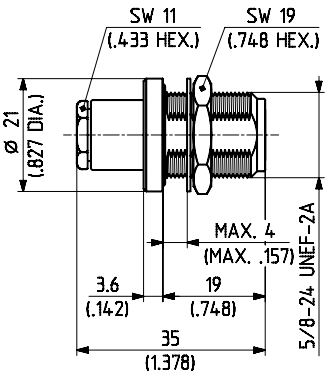

Fig. 1

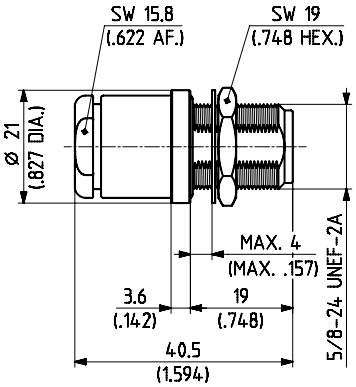

Fig. 2

HUBER+SUHNER type	Item no.	Cable group (example)	Packaging	Assembly instruction/ Mounting hole	Weight	Fig.
24_N-50-3-10/133_NE	**22542295**	U7, 10 (RG 58C/U)	single	9150 / ML 12	41.0 g/1.44 oz.	1
24_N-50-7-8/133_NE	**22542323**	U33, 28 (RG 214/U)	single	3008 / ML 12	53.0 g/1.86 oz.	2

Cable groups see page 28 | Assembly tools see page 385 | Mounting holes see page 412

> for flexible cables

> HUBER+SUHNER® full crimp

> taper sleeves see page 406

> insulating washers see page 408

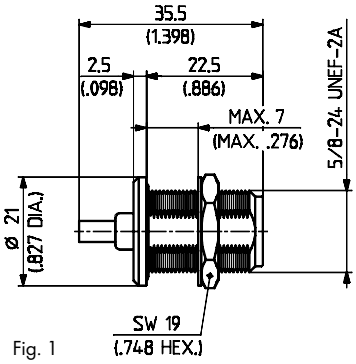

Fig. 1

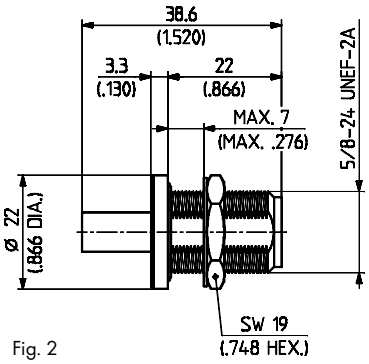

Fig. 2

HUBER+SUHNER type	Item no.	Cable group (example)		Packaging	Assembly instruction	Crimp insert	Weight	Fig.
24_N-50-2-4/133_NE	**22650170**	U2	(RG 316/U)	single	9068	1 A	35.2 g/1.23 oz.	1
24_N-50-2-117/133_NE	**22660124**	U4	(K 02252 D)	single	9068	1 A	36.1 g/1.26 oz.	1
24_N-50-4-17/133_UE	**22651789**	S16	(S 04262 D)	single	3063	2 C	37.3 g/1.31 oz.	2 *

* has to be crimped with large crimp tool or table press!
centre contact not nickel underplated

mounting hole ML 12

> for flexible cables

> HUBER+SUHNER® full crimp

> taper sleeves see page 406

> insulating washers see page 408

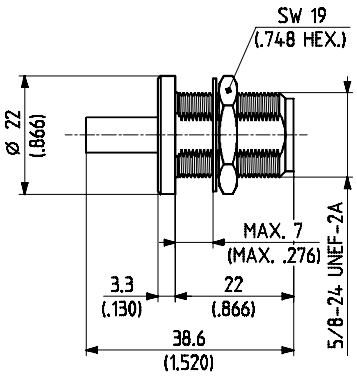

HUBER+SUHNER type	Item no.	Cable group (example)		Packaging	Assembly instruction	Crimp insert	Weight
24_N-50-3-11/133_NE	**22542296**	U7	(RG 58 C/U)	single	3063	2 B	38.0 g/1.33 oz. *
24_N-50-3-12/133_NE	**22542297**	U9	(RG 223/U)	single	3063	2 B	38.0 g/1.33 oz. *

* has to be crimped with large crimp tool or table press!

mounting hole ML 12

Cable groups see page 28 | Assembly tools see page 385 | Mounting holes see page 412

> for flexible cables

> HUBER+SUHNER® full crimp

> taper sleeves see page 406

> insulating washers see page 408

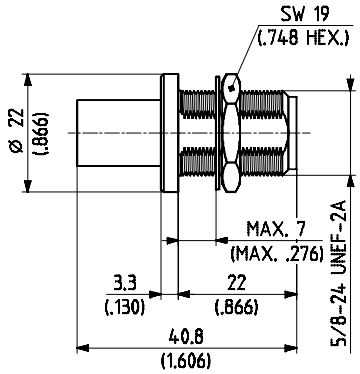

HUBER+SUHNER type	Item no.	Cable group (example)	Packaging	Assembly instruction	Crimp insert	Weight
24_N-50-7-14/133_NE	**22542326**	U29 (RG 213/U)	single	3061	3 D	40.0 g/1.40 oz.
24_N-50-7-15/133_NE	**22542327**	U32 (RG 214/U)	single	3061	3 D	40.0 g/1.40 oz.

mounting hole ML 12

> for flexible cables

> HUBER+SUHNER® full crimp

> taper sleeves see page 406

> insulating washers see page 408

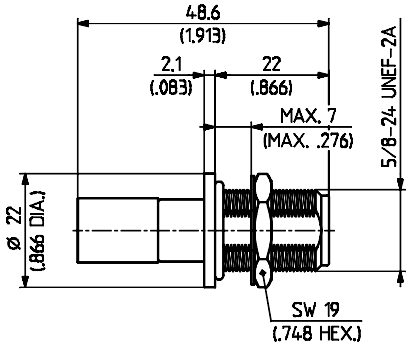

HUBER+SUHNER type	Item no.	Cable group (example)	Packaging	Assembly instruction	Crimp insert	Weight
24_N-50-7-24/133_NE	**22649912**	U33 (RG 393/U)	single	27064	3 D	39.3 g/1.38 oz.

mounting hole ML 12

Cable groups see page 28 | Assembly tools see page 385 | Mounting holes see page 412

Straight panel cable jacks (female)

> for semi-rigid cables

> cable entry soldered

> centre contact soldered

> fastening screws see page 407

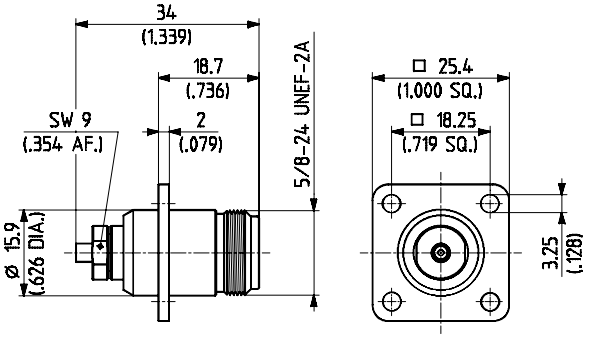

Fig. 1

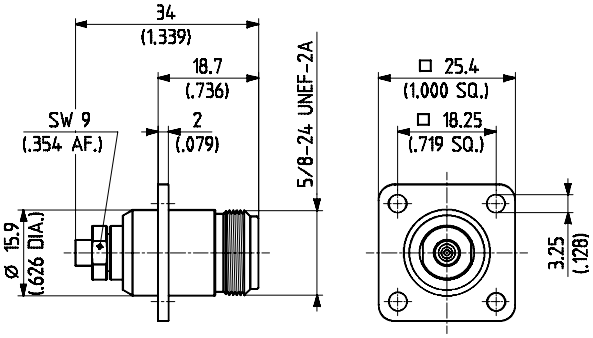

Fig. 2

HUBER+SUHNER type	Item no.	Cable group (example)	Packaging	Assembly instruction	Frequency range	Weight	Fig.
25_N-50-2-14/133_NE ⊞	**22641303**	Y3, Y11 (EZ 86)	single	9073	DC-12.4 GHz	42 g/1.47 oz.	1
25_N-50-3-9/133_NE ⊞	**22543952**	Y5, Y12 (EZ 141)	single	9005	DC-12.4 GHz	42 g/1.47 oz.	2

mounting hole ML 14

> for flexible cables

> cable entry clamp

> centre contact soldered

> fastening screws see page 407

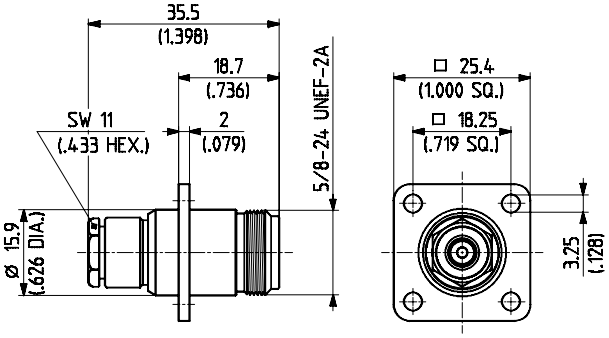

HUBER+SUHNER type	Item no.	Cable group (example)	Packaging	Assembly instruction/ Mounting hole	Weight
25_N-50-2-2/133_NE	**22542332**	U2 (RG 316/U)	single	3017 / ML 14	45.0 g/1.58 oz.
25_N-50-3-4/133_NE	**22542342**	U7, 10 (RG 58C/U)	single	3017 / ML 14	44.0 g/1.54 oz.

⊞ **centre contact NOT captivated**

Cable groups see page 28 | Assembly tools see page 385 | Mounting holes see page 412

> for flexible cables

> cable entry clamp

> centre contact soldered

> fastening screws see page 407

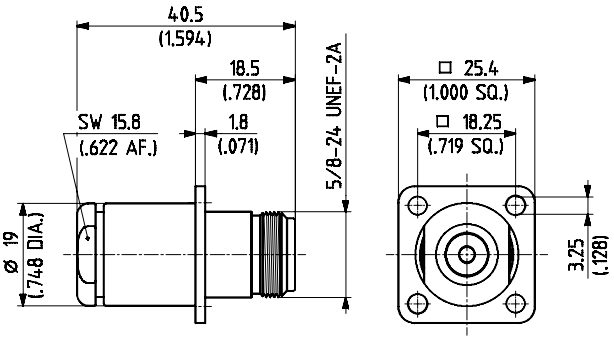

HUBER+SUHNER type	Item no.	Cable group (example)	Packaging	Assembly instruction/ Mounting hole	Weight
25_N-50-7-8/133_NE	**22542366**	U33, 28 (RG 214/U)	single	3008 / ML 18	55.0 g/1.93 oz.

> for flexible cables

> HUBER+SUHNER® full crimp

> fastening screws see page 407

> taper sleeves see page 406

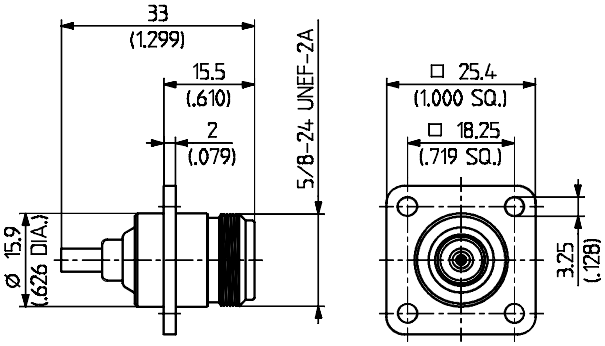

Fig. 1

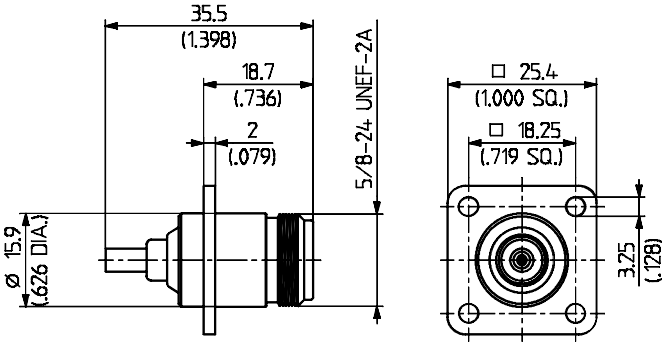

Fig. 2

HUBER+SUHNER type	Item no.	Cable group (example)	Packaging	Assembly instruction	Crimp insert	Weight	Fig.
25_N-50-2-9/133_NE	**22651072**	U2 (RG 316/U)	single	3068	1 A	34.5 g/1.21 oz.	1
25_N-50-2-10/133_NE	**22651054**	U4 (K 02252 D)	single	3068	1 A	38.6 g/1.35 oz.	2

mounting hole ML 14

Cable groups see page 28 | Assembly tools see page 385 | Mounting holes see page 412

> for flexible cables

> HUBER+SUHNER® full crimp

> fastening screws see page 407

> taper sleeves see page 406

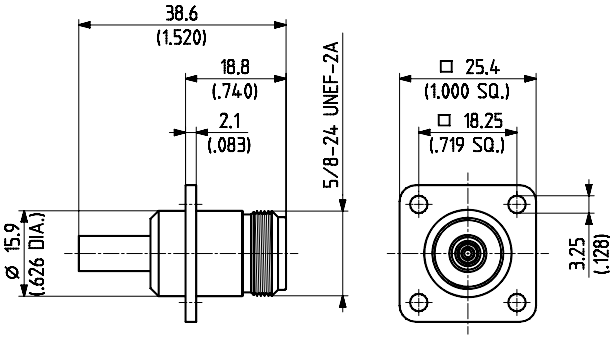

Fig. 1

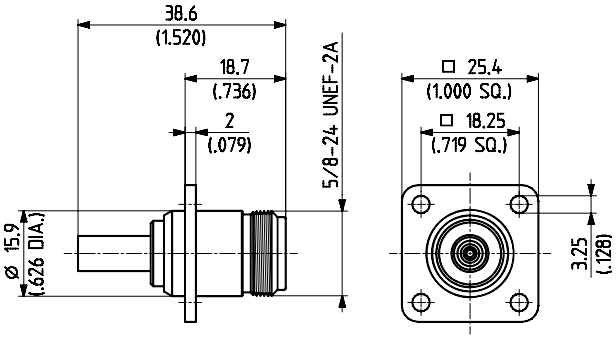

Fig. 2

HUBER+SUHNER type	Item no.	Cable group (example)	Packaging	Assembly instruction	Crimp insert	Weight	Fig.
25_N-50-3-6/133_NE	**22542346**	U7 (RG 58 C/U)	single	3063	2 B	39.0 g/*1.37* oz.	1
25_N-50-3-7/133_NE	**22542348**	U9 (RG 223/U)	single	3063	2 B	39.0 g/*1.37* oz.	1
25_N-50-3-20/133_NE	**22649913**	U11 (RG 400/U)	single	3063	2 B	37.0 g/*1.30* oz.	2

mounting hole ML 14

> for flexible cables

> HUBER+SUHNER® full crimp

> fastening screws see page 407

> taper sleeves see page 406

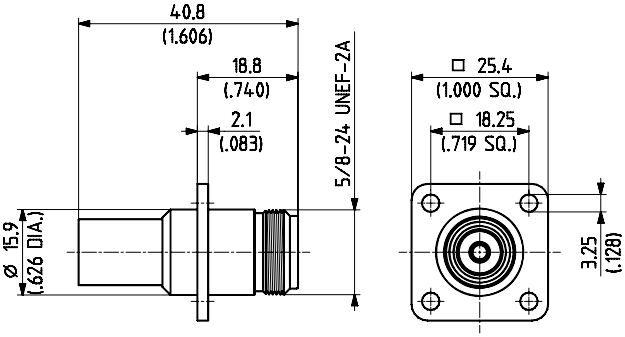

HUBER+SUHNER type	Item no.	Cable group (example)	Packaging	Assembly instruction	Crimp insert	Weight
25_N-50-7-13/133_NE	**22542369**	U29 (RG 213/U)	single	3061	3 D	42.0 g/*1.47* oz.
25_N-50-7-14/133_NE	**22542370**	U32 (RG 214/U)	single	3061	3 D	42.0 g/*1.47* oz.

mounting hole ML 14

Cable groups see page 28 | Assembly tools see page 385 | Mounting holes see page 412

RECEPTACLES WITH SOLDER END

Receptacles, plugs (male)

> panel mounted

> fastening screws see page 407

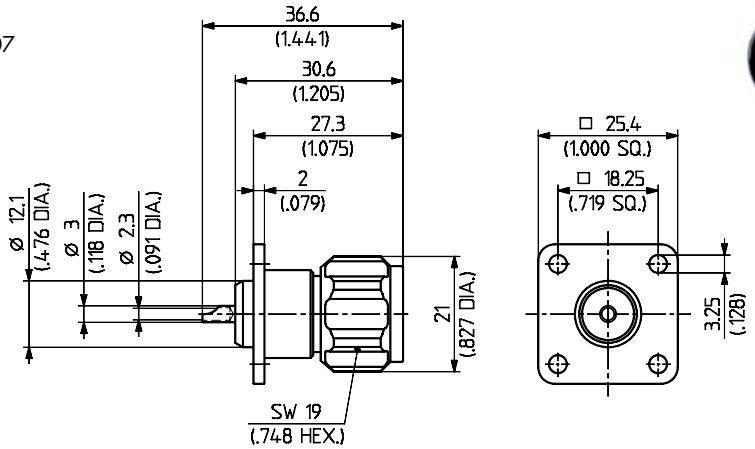

HUBER+SUHNER type	Item no.	Packaging	Mounting hole	Weight
13_N-50-0-1/133_NE	**22542173**	single	ML 16	46.0 g/1.61 oz.

Receptacles, jacks (female)

> panel mounted

> fastening screws see page 407

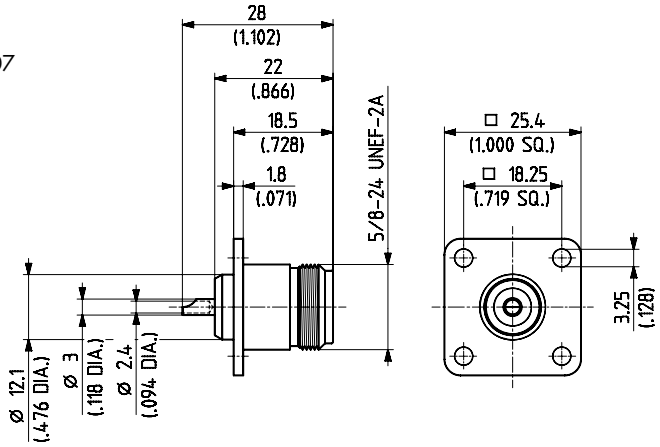

HUBER+SUHNER type	Item no.	Packaging	Mounting hole	Weight
23_N-50-0-1/133_NE	**22542272**	single	ML 17	31.0 g/1.09 oz.

Cable groups see page 28 | Assembly tools see page 385 | Mounting holes see page 412

> bulkhead mounted

> solder tags see page 409

> with panel seal

> insulating washers see page 408

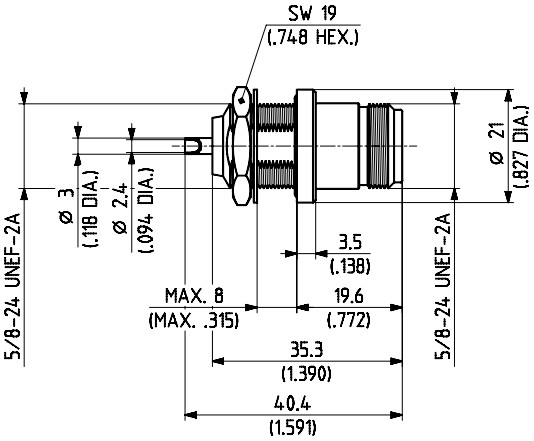

Fig. 1

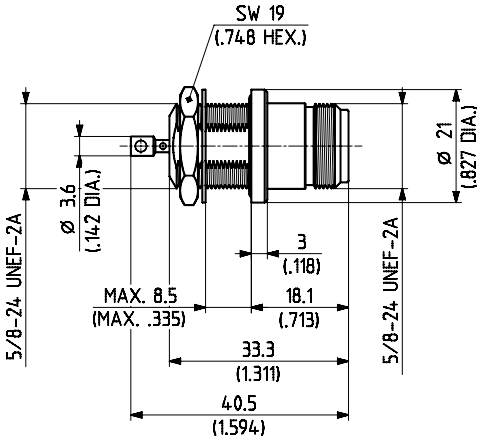

Fig. 2

HUBER+SUHNER type	Item no.	Packaging	Mounting hole	Weight	Notes	Fig.
22_N-50-0-2/133_NE	**22542265**	single	ML 12	47.0 g/1.65 oz.		1
22_N-50-0-3/133_NE	**22644425**	single	ML 12	47.0 g/1.65 oz.	hermetically sealed *	2

* leak rate 10^{-6} Torr l/sec.(*atm cc/s*) max.
* RoHs compliant alternative on request

> bulkhead mounted

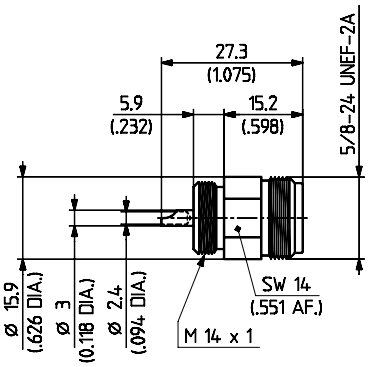

HUBER+SUHNER type	Item no.	Packaging	Weight	Notes
22_N-50-0-23/133_NF	**22651448**	bulk 50 pcs.	20.8 g/0.73 oz.	without nut and washer (direct screw into panel, thread M14x1)

Cable groups see page 28 | Assembly tools see page 385 | Mounting holes see page 412

Receptacles, plugs (male)

> panel mounted
> extended dielectric
> fastening screws included

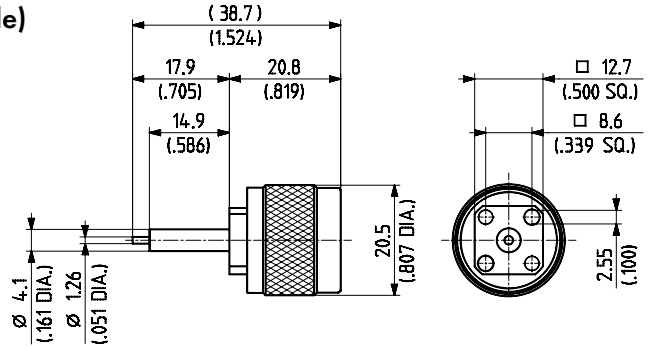

HUBER+SUHNER type	Item no.	Packaging	Weight	Notes
13_N-50-0-30/133_NE	**22642831**	single	30.0 g/1.05 oz.	SMA flange size

Receptacles, jacks (female)

> panel mounted
> extended dielectric
> fastening screws see page 407

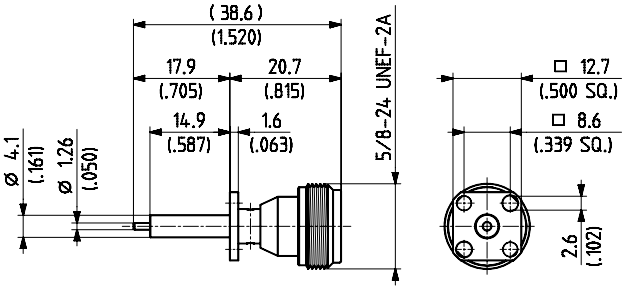

HUBER+SUHNER type	Item no.	Packaging	Weight	Notes
23_N-50-0-30/133_NE	**22642835**	single	14.0 g/0.49 oz.	SMA flange size

> panel mounted
> solder pot terminal
> flush dielectric
> fastening screws see page 407

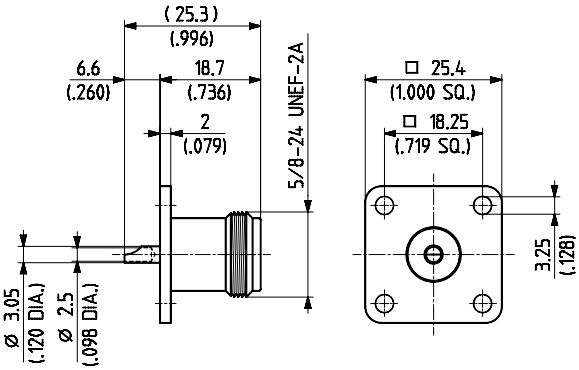

HUBER+SUHNER type	Item no.	Packaging	Weight	Notes
23_N-50-0-23/133_NE	**22544751**	single	24.0 g/0.84 oz.	

Cable groups see page 28 | Assembly tools see page 385 | Mounting holes see page 412

> end of center pin slotted
> panel mounted
> flush dielectric
> fastening screws see page 407

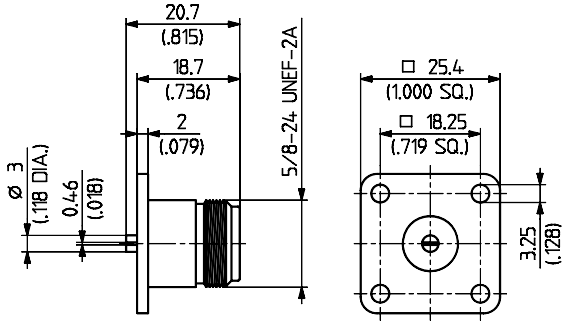

HUBER+SUHNER type	Item no.	Packaging	Weight	Notes
23_N-50-0-69/133_NX	**22648797**	bulk 150 pcs.	27.9 g/0.89 oz.	

> panel mounted
> solder pot terminal
> flush dielectric
> fastening screws see page 407

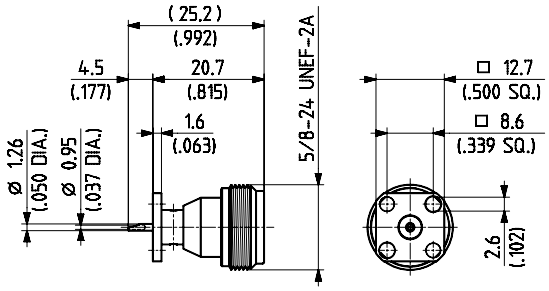

HUBER+SUHNER type	Item no.	Packaging	Weight	Notes
23_N-50-0-31/133_NE	**22642836**	single	13.6 g/0.48 oz.	SMA flange size

STRIPLINE LAUNCHERS

Receptacles, plugs (male)

> panel mounted
> tab contact
> flush dielectric
> fastening screws see page 407

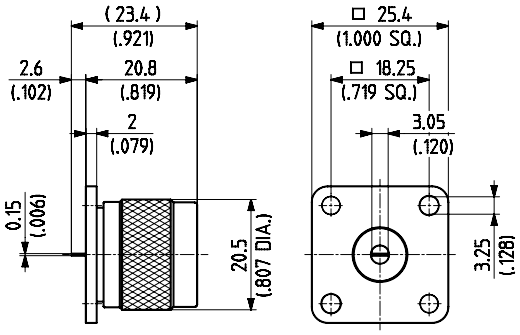

HUBER+SUHNER type	Item no.	Packaging	Weight	Notes
13_N-50-0-33/133_NE	**22642834**	single	36.0 g/1.26 oz.	

Cable groups see page 28 | Assembly tools see page 385 | Mounting holes see page 412

Receptacles, jacks (female)

> panel mounted
> tab contact
> flush dielectric
> fastening screws see page 407

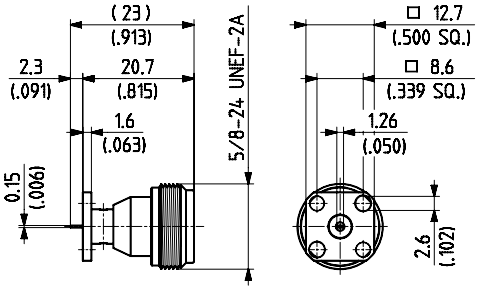

Fig. 1

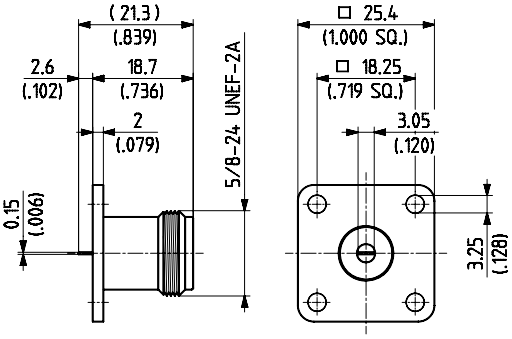

Fig. 2

HUBER+SUHNER type	Item no.	Packaging	Weight	Notes	Fig.
23_N-50-0-16/133_NE	**22641166**	single	13.5 g/0.47 oz.	SMA flange size	1
23_N-50-0-33/133_NE	**22642837**	single	24.5 g/0.86 oz.		2

PROTECTIVE CAPS

> suitable for N50 Ω and N75 Ω
> with chain

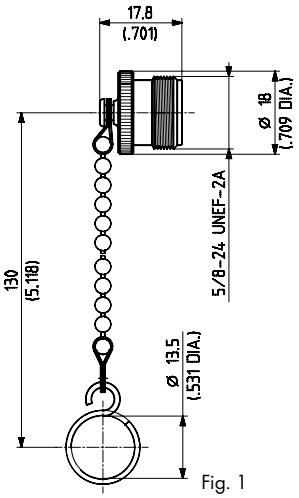

Fig. 1

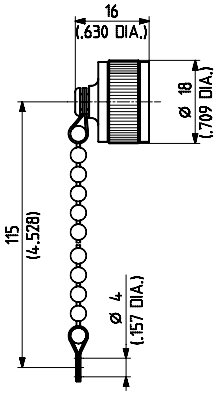

Fig. 2

HUBER+SUHNER type	Item no.	Packaging	Weight	Notes	Fig.
61_N-0-0-1/–3_-E	**22542452**	single	16.0 g/0.56 oz.	for plugs	1
62_N-0-0-1/–3_-E	**22543433**	single	15.0 g/0.53 oz.	for jacks	2

Cable groups see page 28 | Assembly tools see page 385 | Mounting holes see page 412

A FURTHER HUBER+SUHNER PRODUCT GROUP!

Low smoke, free of halogen coaxial cables

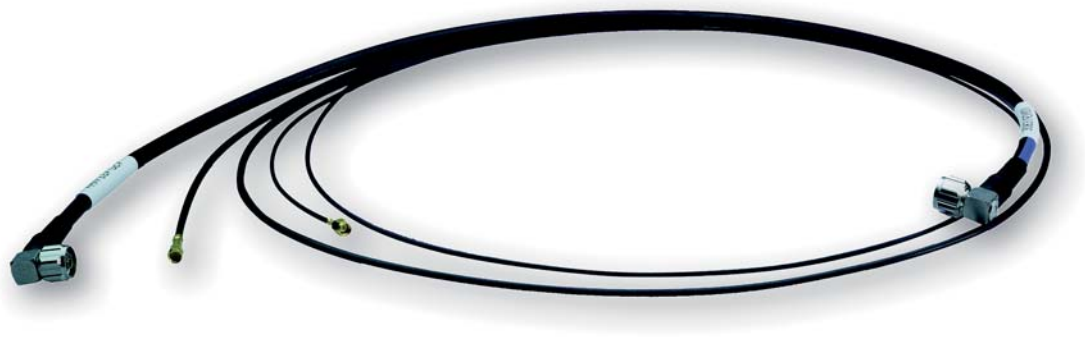

Details on this product are to be found in the brochure, Item no. 23032234 (in Enblish only). Get your copy free of charge at **www.hubersuhner.com.**

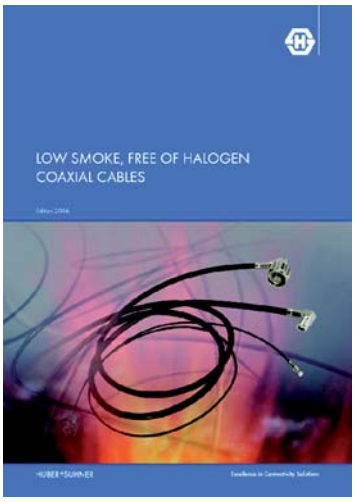

SERIES N 75 Ω, COAXIAL CONNECTORS

DESCRIPTION

HUBER+SUHNER N connectors are available with 50 Ω and 75 Ω impedance. The HUBER+SUHNER N-75 Ω connectors are suitable for applications up to 1.5 GHz. The screw-type coupling mechanism provides a sturdy and reliable connection.

Compatibility

Center conductors of N 75 Ω connectors have a smaller diameter than those of the 50 Ω version. Therefore 50 Ω and 75 Ω connectors must not be mated with each other.

CONTENTS PAGE

INTERFACE DIMENSIONS

Plug (male)

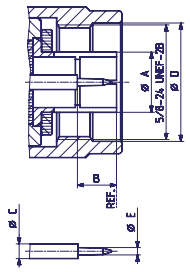

Jack (female)

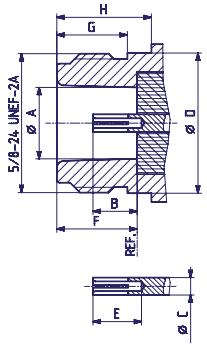

INTERFACE DIMENSIONS (*MM / INCHES*)

	Plug		Jack	
	min.	max.	min.	max.
A	–	8.38/.330	8.03/.316	8.13/.320
B	5.33/.210	5.84/.230	4.75/.187	5.26/.207
C	–	2.00/.079	–	2.00/.079
D	16.00/.630	–	–	15.93/.627
E	1.00/.039	1.05/.041	5.33/.210	–
F	–	–	9.04/.356	9.19/.362
G	–	–	6.76/.266	–
H	–	–	10.72/.422	–

IP rating (interface, mated) IP68

TECHNICAL DATA

ELECTRICAL DATA	REQUIREMENTS
Impedance	75 Ω
Frequency range	DC ... 1.5 GHz
Dielectric withstanding voltage (at sea level)	2.5 kV rms, 50 Hz
Working voltage (at sea level)	≤ 1.0 kV rms, 50 Hz
Insulation resistance	≥ $5 \cdot 10^3$ MΩ
Contact resistance - centre contact - outer contact	 ≤ 1.0 mΩ ≤ 1.0 mΩ
RF-leakage (measured at 1 GHz)	≥ 90 dB

MECHANICAL DATA	REQUIREMENTS
Coupling nut torque - recommended - proof torque	 0.68 Nm ... 1.13 Nm / *6.0 ... 10.0 in. lbs* 1.70 Nm / *15.0 in. lbs*
Coupling nut retention force	≥ 450 N / *101.2 lbs*
Contact captivation	≥ 28 N / *6.3 lbs*
Cable retention force[1)]	see pages 28 – 34
Durability (matings)	≥ 500

1) Angabe berücksichtig die maximale Belastbarkeit des Kabels ohne irreversible, die Funktion beeinträchtigende Veränderung

ENVIRONMENTAL DATA	TEST CONDITIONS
Temperature range	– 65°C ... + 165°C / – 85 °F ... + 329 °F
Climatic category	IEC → 55/155/21
Thermal shock	MIL-STD-202, Method 107, Condition B
Moisture resistance	MIL-STD-202, Method 106
Corrosion	Saltspray test acc. to MIL-STD-202, Method 101, Condition B
Vibration	MIL-STD-202, Method 204, Condition B
Shock	MIL-STD-202, Method 213, Condition I

MATERIAL DATA		
CONNECTOR PART	**MATERIAL**	**PLATING**
Bodies	brass	SUCOPLATE®
Pin contacts	brass	gold / SUCOPRO
Outer contact, slotted	spring bronze	SUCOPLATE®
Female contacts	copper-beryllium alloy; spring bronze	gold / SUCOPRO
Crimp ferrules	copper	SUCOPLATE®
Insulators, standard version	PTFE or PFA	
Gaskets	silicone rubber	

Some connectors may have a specification that differs from the above mentioned data.

The products are designed and guaranteed to pass the above mentioned test procedures. Any additional or different requirement arising from specific applications or environmental conditions which is not covered by these test procedures is subject to request.

CABLE CONNECTORS

Straight cable plugs (male)

> for flexible cables

> cable entry clamp

> centre contact soldered

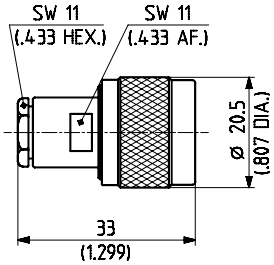

Fig. 1

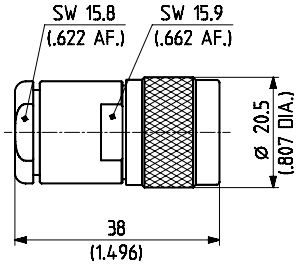

Fig. 2

HUBER+SUHNER type	Item no.	Cable group (example)	Packaging	Assembly instruction	Weight	Fig.
11_N-75-4-3/133_NE	**22542467**	U15 (RG 59 B/U)	single	27042	34.0 g/1.19 oz	1
11_N-75-4-6/133_NE	**22542475**	U18 (G 04233 D)	single	27042	34.0 g/1.19 oz	1
11_N-75-5-2/133_NE	**22542484**	U23 (RG 6 A/U)	single	3045	54.0 g/1.89 oz	2
11_N-75-7-4/133_NE	**22542497**	U37, 35 (RG 216/U)	single	3008	48.0 g/1.68 oz.	2

> for flexible cables

> HUBER+SUHNER® full crimp

> taper sleeves see page 406

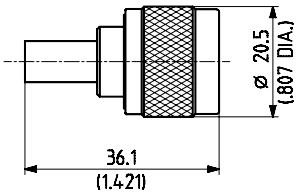

Fig. 1

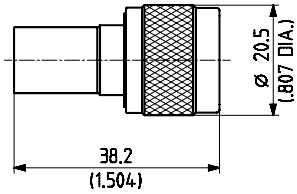

Fig. 2

HUBER+SUHNER type	Item no.	Cable group (example)	Packaging	Assembly instruction	Crimp insert	Weight	Fig.
11_N-75-4-8/133_NE	**22542477**	U16 (RG 59 B/U)	single	3063	2 C	30.0 g/1.05 oz.	1
11_N-75-4-9/133_NE	**22542478**	U18 (G 04233 D)	single	3063	2 C	30.0 g/1.05 oz.	1
11_N-75-7-16/133_NE	**22542511**	U34 (RG 11 A/U)	single	3061	2 D	32.0 g/1.12 oz.	2
11_N-75-7-18/133_NE	**22542512**	U36 (RG 216/U)	single	3061	2 D	32.0 g/1.12 oz.	2

Cable groups see page 28 Assembly tools see page 385 Mounting holes see page 412

Straight cable jacks (female)

> for flexible cables

> HUBER+SUHNER® full crimp

> taper sleeves see page 406

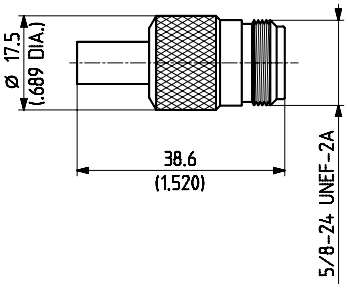

HUBER+SUHNER type	Item no.	Cable group (example)	Packaging	Assembly instruction	Crimp insert	Weight
21_N-75-4-8/133_NE	**22640810**	U16 (RG 59 B/U)	single	3063	2 C	34.0 g/*1.19 oz*

Straight bulkhead cable jacks (female)

> for flexible cables

> cable entry clamp

> centre contact soldered

> with panel seal

> insulating washers see page 408

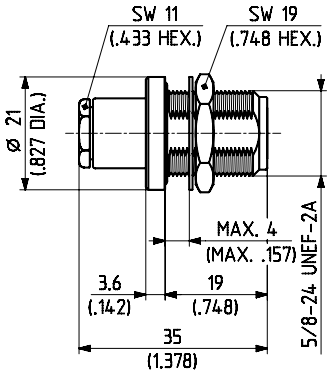

HUBER+SUHNER type	Item no.	Cable group (example)	Packaging	Assembly instruction/ Mounting hole	Weight
24_N-75-4-2/133_NE	**22543628**	U15 (RG 59 B/U)	single	27042 / ML 12	40.0 g/*1.40 oz.*

Cable groups see page 28 | Assembly tools see page 385 | Mounting holes see page 412

RECEPTACLES WITH SOLDER END

Flange mount, plugs (male)

> panel mounted

> fastening screws see page 407

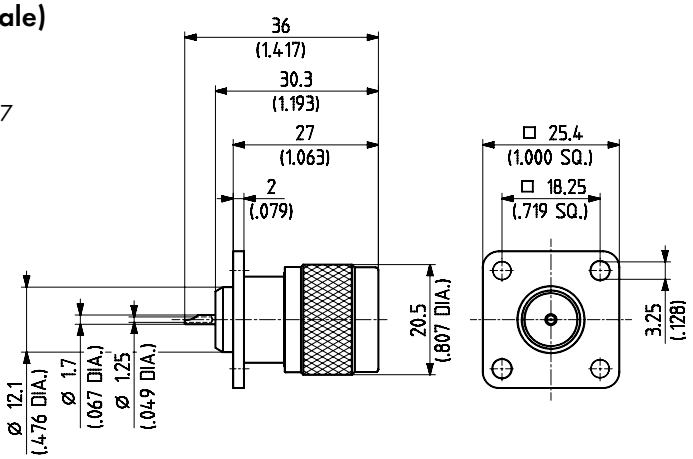

HUBER+SUHNER type	Item no.	Packaging	Mounting hole	Weight
13_N-75-0-1/133_NE	**22542522**	single	ML 16	45.0 g/*1.58* oz.

Flange mount, jacks (female)

> panel mounted

> fastening screws see page 407

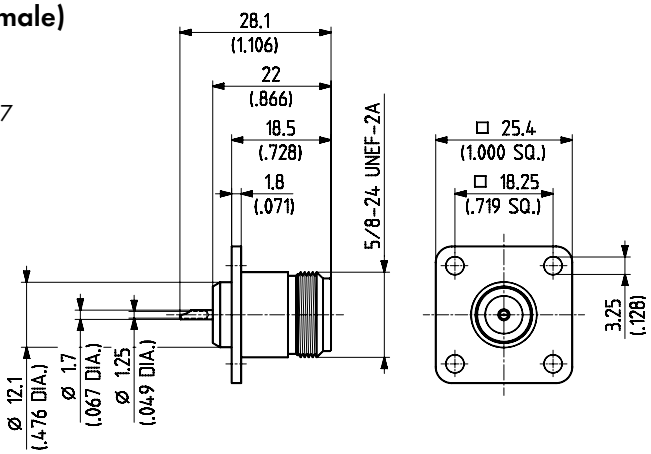

HUBER+SUHNER type	Item no.	Packaging	Mounting hole	Weight
23_N-75-0-1/133_NE	**22542575**	single	ML 17	30.0 g/*1.05* oz.

Cable groups see page 28 | Assembly tools see page 385 | Mounting holes see page 412

SERIES 7/16
COAXIAL CONNECTORS

DESCRIPTION

HUBER+SUHNER 7/16 connectors are mechanically very rugged coaxial connectors with screw lock. They have a characteristic impedance of
50 Ω and are applicable with excellent electrical properties up to 7.5 GHz.
Transmission of medium to high power in transmitting stations and low loss transmission of received signals such as in mobile phone base stations are typical applications.
For these purposes low intermodulation product and water-proof types are also available.

CONTENTS PAGE

INTERFACE DIMENSIONS

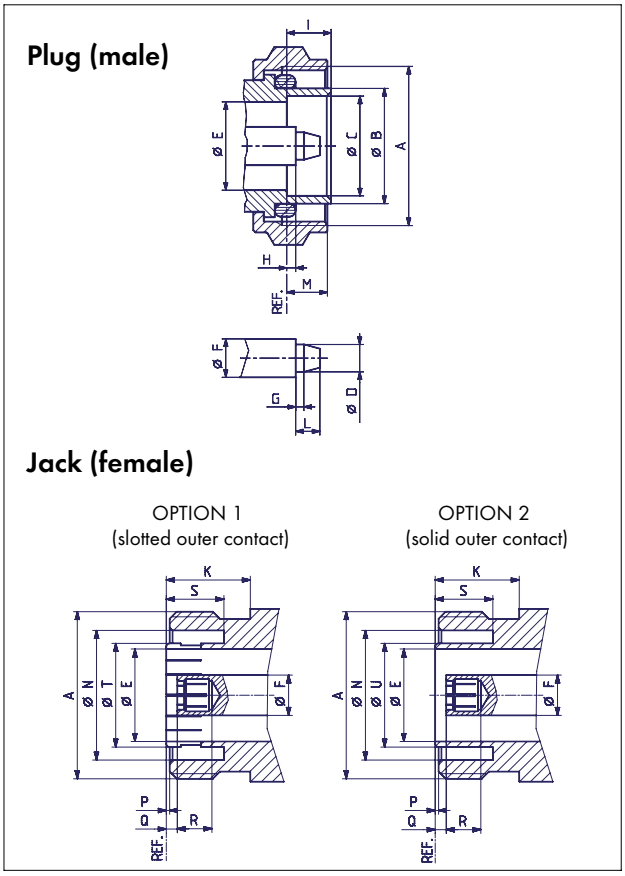

INTERFACE DIMENSIONS (MM / *INCHES*)

	Plug		Jack	
	min.	max.	min.	max.
A	M29 × 1.5		M29 × 1.5	
B	20.60/.811	21.40/.843	–	–
C	18.03/.710	18.21/.717	–	–
D	4.96/.195	5.04/.198	–	–
E	15.85/.624	16.25/.640	15.85/.624	16.25/.640
F	7.00/.276 nom.		7.00/.276 nom.	
G	1.40/.055	1.60/.063	–	–
H	1.47/.058	1.77/.070	–	–
I	7.00/.276	8.00/.315	–	–
K	–	–	10.00/.394	–
L	–	4.50/.177	–	–
M	7.00/.276	9.00/.354	–	–
N	–	–	22.10/.870	22.90/.902
P	–	–	0.50/.020	0.70/.028
Q	–	–	1.77/.070	2.07/.082
R	–	–	5.00/.197	–
S	–	–	8.10/.319	–
T	–	–	–	18.50/.728*
U	–	–	–	18.00/.709

* prior to slotting

IP rating (interface, mated) IP68

Interface dimensions conformable to the Standards:

International	**IEC 61169-4**
Europe:	**CECC 22 190**
Germany	**DIN 47223, VG 95250**

TECHNICAL DATA

ELECTRICAL DATA	REQUIREMENTS	
Impedance	50 Ω	
Frequency range	DC ... 7.5 GHz	combination types: DC - 1 GHz
Dielectric withstanding voltage (at sea level) - combination system	4.0 kV rms, 50 Hz 2.5 kV rms, 50 Hz	
Working voltage (at sea level) - combination system	≤ 2.5 kV rms, 50 Hz ≤ 1.0 kV rms, 50 Hz	
Insulation resistance	≥ 10^4 MΩ	
Contact resistance - centre contact - outer contact	≤ 0.4 mΩ ≤ 1.5 mΩ	
RF-leakage (at 1 GHz)	≥ 128 dB	
VSWR	see table below	

TYPICAL VSWR*	FREQUENCY RANGE			
CONNECTOR TYPE	1 GHz	2.5 GHz	5 GHz	CABLE GROUP
straight connectors	1.04	1.05	1.12	M5, M7
	1.05	1.07	1.10	U29, U32
	1.03	1.05	1.10	S39
right angle connectors	1.04	1.05	1.12	M5, M7

* Values which can be achieved when connectors are perfectly fixed onto the cable.

Other connectors and cables on request

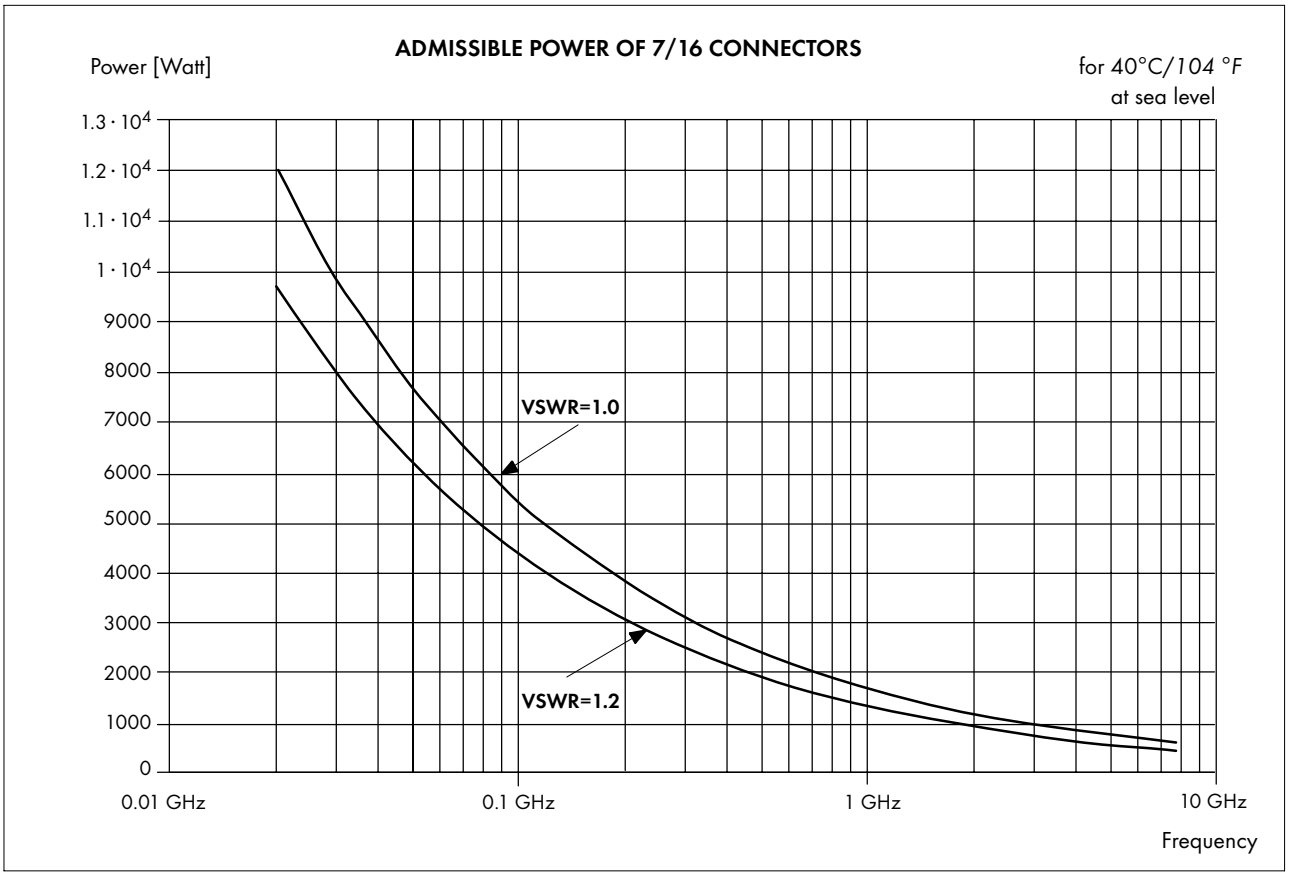

MECHANICAL DATA	REQUIREMENTS
Coupling nut torque - recommended - proof torque	 25 Nm ... 30 Nm / *221 in. lbs ... 260 in. lbs* 35 Nm / *310 in. lbs*
Coupling nut retention force	≥ 1000 N / *225.0 lbs*
Contact captivation	≥ 200 N / *45.0 lbs*
Cable retention force[1)]	see pages 28 – 34
Durability (matings)	≥ 500

1) Value considers maximum load of the cables without irreversible variations of specifications.

ENVIRONMENTAL DATA	CECC 22190 TEST CONDITIONS	EQUIVALENT MIL TEST CONDITIONS
Temperature range		– 65°C ... + 165°C / – 85 °F ... + 329 °F
Climatic category	4.6.5 → 55/155/56	
Corrosion (mated connectors)	4.6.10 → IEC-68-2-11 Ka	Saltspray test acc. to MIL-STD-202, Method 101, Condition B
Vibration	4.6.3 → IEC 68-2-6 Fc	

MATERIAL DATA		
CONNECTOR PART	**MATERIAL**	**PLATING**
Bodies	brass	SUCOPLATE®
Pin contacts	brass	silver
Outer contacts, jacks Socket contact	spring bronze	silver
Crimp ferrules	copper	SUCOPLATE®
Insulators, standard version	PTFE or PFA	
Gaskets	silicone rubber	

Some connectors may have a specification that differs from the above mentioned data.

The products are designed and guaranteed to pass the above mentioned test procedures. Any additional or different requirement arising from specific applications or environmental conditions which is not covered by these test procedures is subject to request.

CABLE CONNECTORS

Straight cable plugs (male)

> for corrugated cables

> cable entry clamp

> centre contact soldered

> degree of protection IP 68

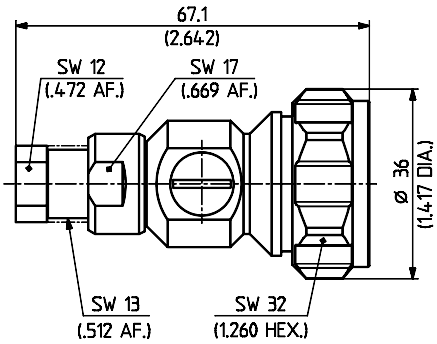

HUBER+SUHNER type	Item no.	Cable group (example)	Packaging	Assembly instruction	Weight
11_716-50-5-4/003_-Z	**23003412**	M5 (SUCOFEED ¼"HF)	bulk 10 pcs.	27297	149 g / 5.25 oz.

> for SUCOFORM cables

> cable entry soldered

> centre contact soldered

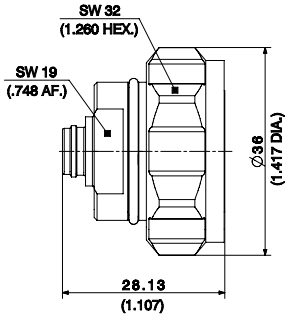

HUBER+SUHNER type	Item no.	Cable group (example)	Packaging	Assembly instruction	Weight
11_716-50-5-6/003_-Y	**84008435**	Y13 (Sucoform 250-01)	bulk 10 pcs.	0000215393	75 g / 2.65 oz.

> for flexible cables

> cable entry crimp

> centre contact plugged

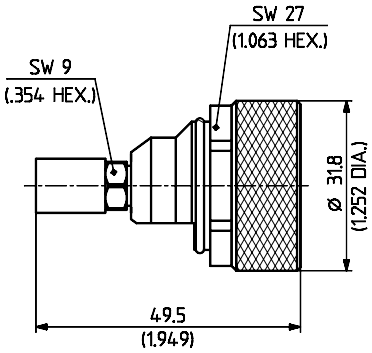

HUBER+SUHNER type	Item no.	Cable group (example)	Packaging	Assembly instruction	Crimp insert	Weight
11_716-50-6-3/003_-E	**22652341**	S24 (S 06162 D-02)	single	27330	8.65	86 g / 3.01 oz.

Cable groups see page 28 Assembly tools see page 385 Mounting holes see page 412

> for flexible cables

> cable entry HUBER+SUHNER® pressure-sleeve

> centre contact soldered

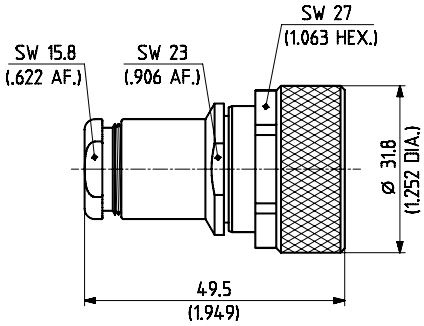

HUBER+SUHNER type	Item no.	Cable group (example)	Packaging	Assembly instruction	Weight
11_716-50-7-3/003_-E	**22544075**	U28 (RG 213/U)	single	9018	105 g/3.68 oz.
11_716-50-7-4/003_-E	**22544076**	U33 (RG 214/U)	single	9018	100 g/3.50 oz.

> for corrugated cables

> cable entry soldered

> centre contact soldered

> degree of protection IP 66

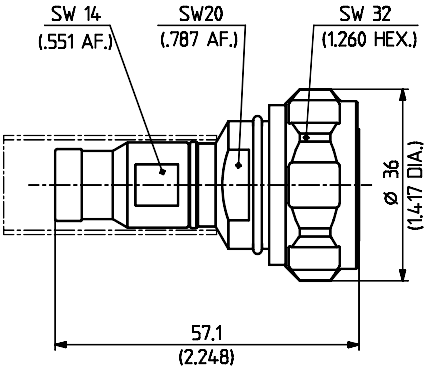

HUBER+SUHNER type	Item no.	Cable group (example)	Packaging	Assembly instruction	Weight
11_716-50-7-20/003_-Z	**22658154**	M7 (SUCOFEED $^{3}/_{8}$"HF)	bulk 10 pcs.	27186	115 g/4.05 oz.

> for flexible cables

> HUBER+SUHNER® full crimp

> taper sleeves see page 406

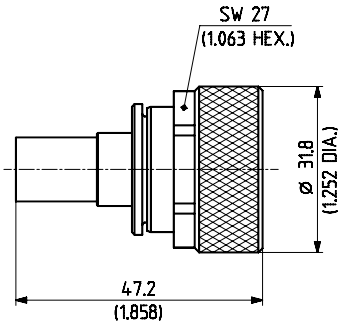

HUBER+SUHNER type	Item no.	Cable group (example)	Packaging	Assembly instruction	Crimp insert	Weight
11_716-50-7-1/003_-E	**22544073**	U29 (RG 213/U)	single	9017	3 D	85 g/2.98 oz.
11_716-50-7-2/003_-E	**22544074**	U32 (RG 214/U)	single	9017	3 D	85 g/2.98 oz.

Cable groups see page 28 Assembly tools see page 385 Mounting holes see page 412

> for flexible cables

> cable entry crimp

> centre contact soldered

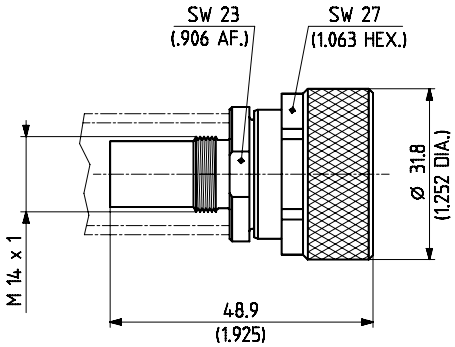

HUBER+SUHNER type	Item no.	Cable group (example)	Packaging	Assembly instruction	Crimp insert	Weight
11_716-50-7-14/003_-E	**22646908**	S32 (S 07262 BD)	single	27003	D	91 g/3.19 oz. *

* types available with additional sealing ferrule (IP67)

> for flexible cables

> cable entry crimp

> centre contact plugged-in

> degree of protection IP 67

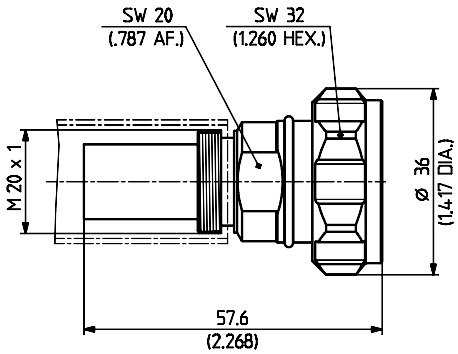

HUBER+SUHNER type	Item no.	Cable group (example)	Packaging	Assembly instruction	Crimp insert	Weight
11_716-50-10-3/003_-Z	**23002520**	S39 (S 10172 B-11)	bulk 10 pcs.	27354	12.4	100 g/3.52 oz.

Right angle cable plugs (male)

> for corrugated cables

> cable entry clamp

> centre contact soldered

> degree of protection IP 68

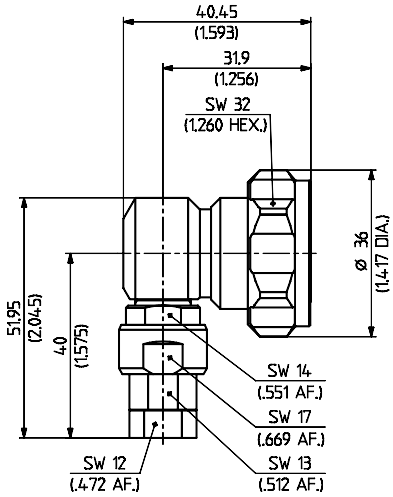

HUBER+SUHNER type	Item no.	Cable group (example)	Packaging	Assembly instruction	Weight
16_716-50-5-2/003_-Z	**23016774**	M5 (SUCOFEED ¼"HF)	bulk 10 pcs.	27369	150 g/5.25 oz.

Cable groups see page 28 | Assembly tools see page 385 | Mounting holes see page 412

> for flexible cables

> cable entry crimp

> centre contact soldered

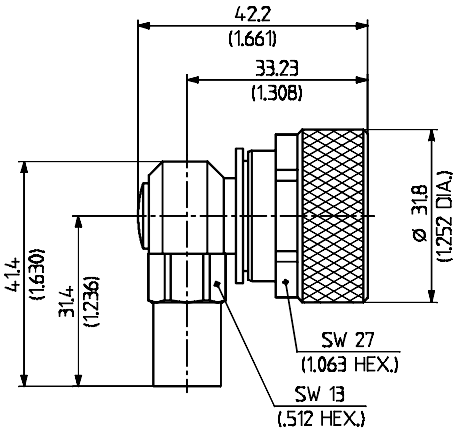

Fig. 1

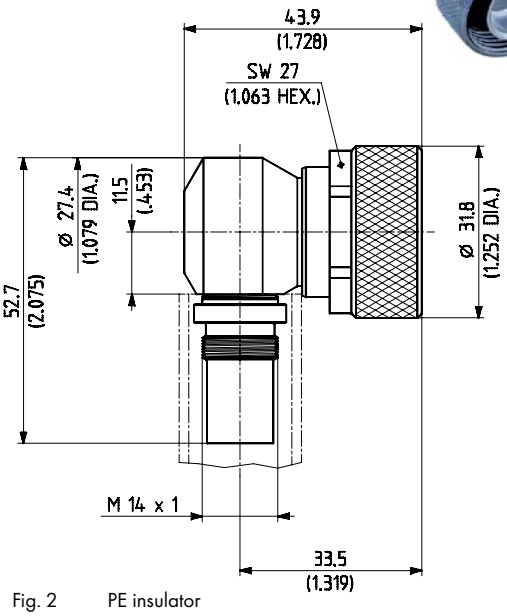

Fig. 2 PE insulator

HUBER+SUHNER type	Item no.	Cable group (example)	Packaging	Assembly instruction	Crimp insert	Weight	Fig.
16_716-50-7-10/003_-E	**22658839**	U33 (RG 393/U) U32 (RG 214/U)	single	9087	D	103 g/3.61 oz.	1
16_716-50-7-11/003_-E	**22649421**	S32 (S 07262 BD)	single	9094	D	154 g/5.39 oz.	2*

* types available with additional sealing ferrule (IP67)

> for corrugated cables

> cable entry soldered

> centre contact soldered

> degree of protection IP 66

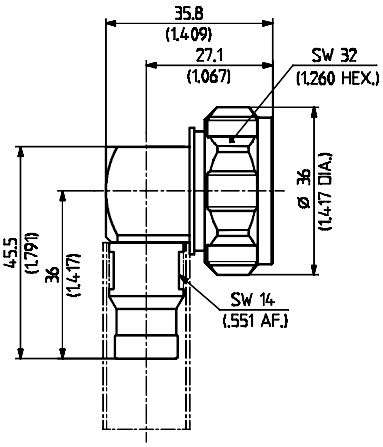

HUBER+SUHNER type	Item no.	Cable group (example)	Packaging	Assembly instruction	Weight
16_716-50-7-20/003_-Z	**22658147**	M7 (SUCOFEED $^{3}/_{8}$"HF)	bulk 10 pcs.	27187	114 g/4.02 oz.

Cable groups see page 28 Assembly tools see page 385 Mounting holes see page 412

Straight cable jacks (female)

> for corrugated cables

> cable entry clamp

> centre contact soldered

> degree of protection IP 68

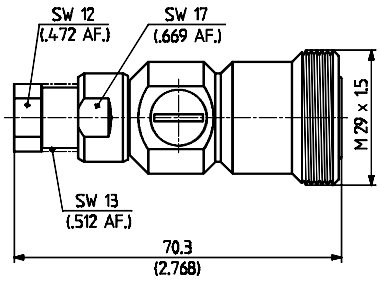

HUBER+SUHNER type	Item no.	Cable group (example)	Packaging	Assembly instruction	Weight
21_716-50-5-400/003_-Z	**23011950**	M5 (SUCOFEED ¼"HF)	bulk 10 pcs.	27297	140 g / 4.90 oz.

> for flexible cables

> HUBER+SUHNER® full crimp

> taper sleeves see page 406

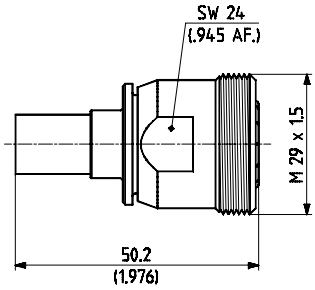

HUBER+SUHNER type	Item no.	Cable group (example)	Packaging	Assembly instruction	Crimp insert	Weight
21_716-50-7-1/003_-E	**22544092**	U29 (RG 213/U)	single	9017	3 D	90 g/3.15 oz.
21_716-50-7-2/003_-E	**22544093**	U32 (RG 214/U)	single	9017	3 D	90 g/3.15 oz.

> for flexible cables

> cable entry crimp

> centre contact soldered

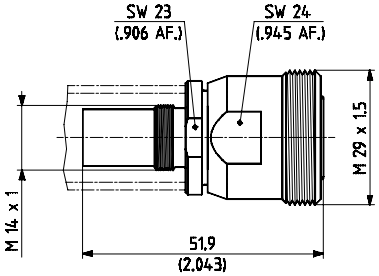

HUBER+SUHNER type	Item no.	Cable group (example)	Packaging	Assembly instruction	Crimp insert	Weight
21_716-50-7-11/003_-E	**22648494**	S32 (S 07262 BD)	single	27003	D	97 g/3.40 oz. *

* types available with additional sealing ferrule (IP67)

Cable groups see page 28 | Assembly tools see page 385 | Mounting holes see page 412

> for flexible cables

> cable entry crimp

> centre contact plugged-in

> degree of protection IP 67

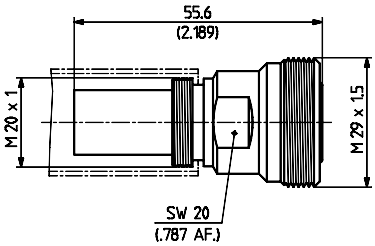

HUBER+SUHNER type	Item no.	Cable group (example)	Packaging	Assembly instruction	Crimp insert	Weight
21_716-50-10-1/003_-Z	**23002535**	S39 (S 10162 B-11)	bulk 10 pcs.	27354	12.4	85 g/2.99 oz.

Straight bulkhead cable jacks (female)

> for corrugated cables

> cable entry clamp

> centre contact soldered

> degree of protection IP 68

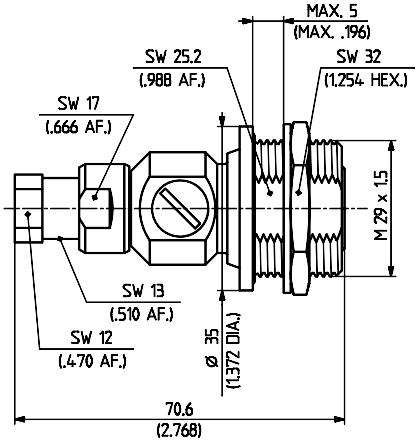

HUBER+SUHNER type	Item no.	Cable group (example)	Packaging	Assembly instruction/ Mounting hole	Weight
24_716-50-5-400/003_-Z	**22658272**	M5 (SUCOFEED ¼"HF)	bulk 10 pcs.	27297 / ML 110	171 g/6.03 oz.

Cable groups see page 28 Assembly tools see page 385 Mounting holes see page 412

Straight panel cable jacks (female)

> for SUCOFORM cables

> cable entry soldered

> centre contact plugged

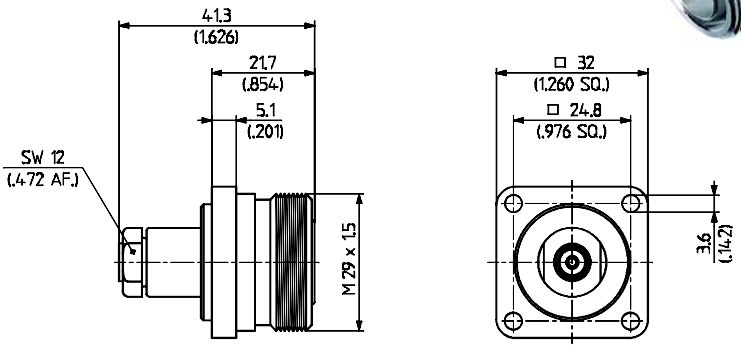

HUBER+SUHNER type	Item no.	Cable group (example)	Packaging	Assembly instruction	Mounting hole	Weight
25_716-50-5-7/00-_-E	**23011905**	Y13 (Sucoform 250)	single	27117	ML 27	110 g/3.85 oz.

mounting hole ML 27

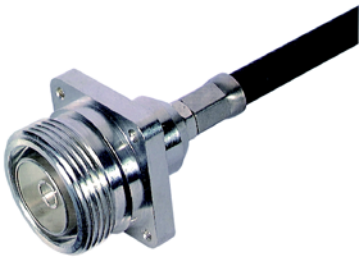

> for flexible cables

> cable entry crimp

> centre contact plugged

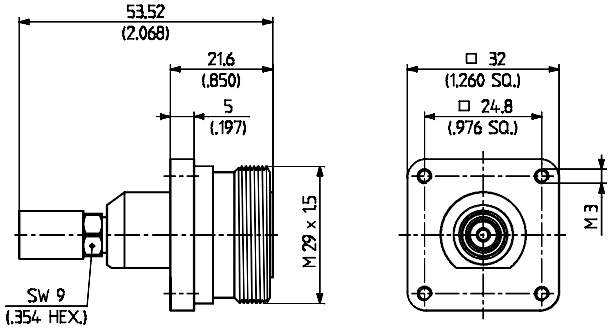

HUBER+SUHNER type	Item no.	Cable group (example)	Packaging	Assembly instruction	Crimp insert	Weight
25_716-50-6-2/003_-V	**22652322**	S24 (S 06162 D-02)	bulk 20 pcs.	27330	8.65	110 g/3.85 oz.

Cable groups see page 28 | Assembly tools see page 385 | Mounting holes see page 412

> for flexible cables

> cable entry crimp

> centre contact soldered

> degree of protection IP 66

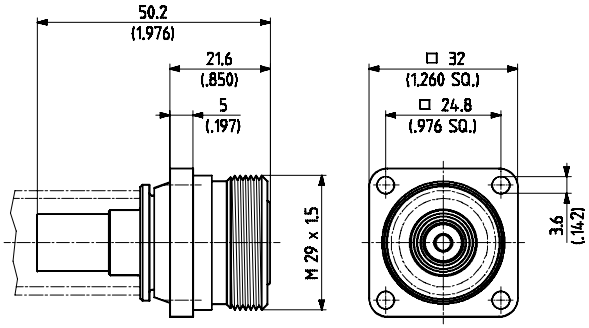

HUBER+SUHNER type	Item no.	Cable group (example)	Packaging	Assembly instruction	Crimp insert	Weight
25_716-50-7-11/003_-E	**22649423**	S32 (S 07262 BD)	single	27003	D	112 g/3.92 oz.

mounting hole ML 27

> for corrugated cables

> cable entry soldered

> centre contact soldered

> degree of protection IP 66

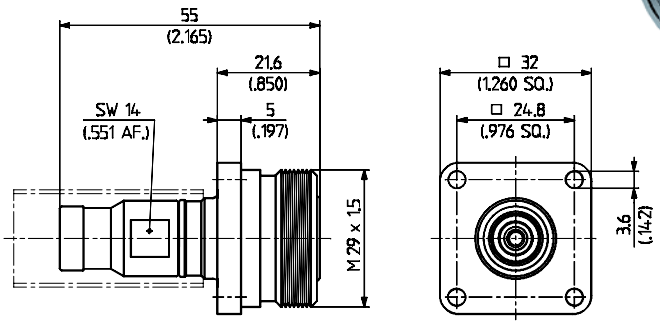

HUBER+SUHNER type	Item no.	Cable group (example)	Packaging	Assembly instruction/ Mounting hole	Weight
25_716-50-7-21/003_-Z	**23000282**	M7 (SUCOFEED $^{3}/_{8}$"HF)	bulk 10 pcs.	27188 / ML 27	106 g/3.73 oz.

Cable groups see page 28 Assembly tools see page 385 Mounting holes see page 412

Right angle bulkhead cable jacks (female)

> for corrugated cables

> cable entry clamp

> centre contact soldered

> degree of protection IP 68

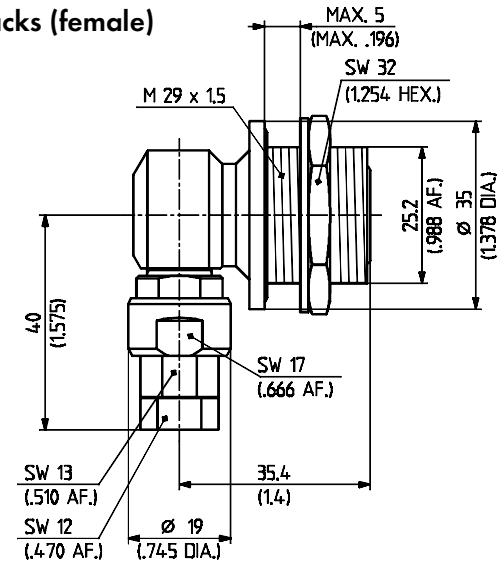

HUBER+SUHNER type	Item no.	Cable group (example)	Packaging	Assembly instruction/ Mounting hole	Weight
29_716-50-5-400/003_-Z	**22658301**	M5 (SUCOFEED ¼"HF)	bulk 10 pcs.	27315 / ML 110	171 g/6.03 oz.

7/16 COMBINATION SYSTEM

The HUBER+SUHNER 7/16 combination system enables efficient, low cost and flexible stocking of 7/16 cable connectors. The 11 basic parts can be combined to obtain 48 different cable connector types for almost all coaxial cables with 2.95 mm (.116 in.), 4.7 mm (.185 in.) or 7.25 mm (.285 in.) dielectric diameter. The cable entries are available with both crimp type or pressure-sleeve (no special tools) cable attachment.
Centre conductors are soldered. All cable entries can be used together with any of the combi-heads. Taper sleeves can be supplied for the crimp type cable entries.Straight or right angle configurations are possible with the same sub-assemblies. All types have 50 Ω impedance and are suitable for frequencies up to 1 GHz. The working voltage is limited to 1.0 kV rms.

Combi-heads

> plug (male)

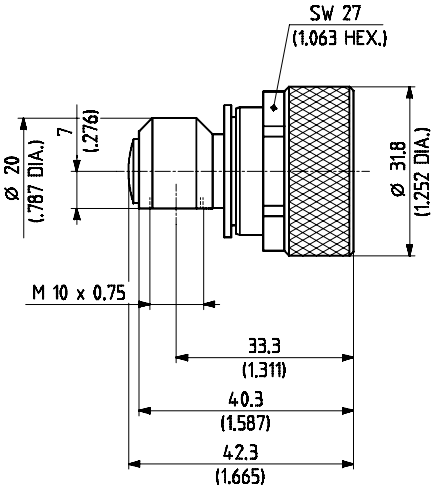

HUBER+SUHNER type	Item no.	Packaging	Weight	Notes
11_716-50-0-2/003_-E	**22641432**	single	100 g/3.50 oz.	cable entries see page 319/320

Cable groups see page 28 | Assembly tools see page 385 | Mounting holes see page 412

> jack (female)

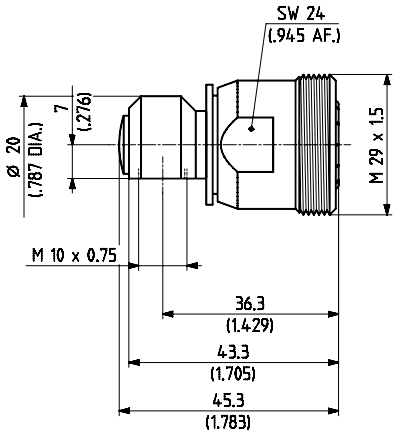

HUBER+SUHNER type	Item no.	Packaging	Weight	Notes
21_716-50-0-2/003_-E	**22641433**	single	103 g/3.61 oz.	cable entries see page 319/320

> bulkhead jack (female)

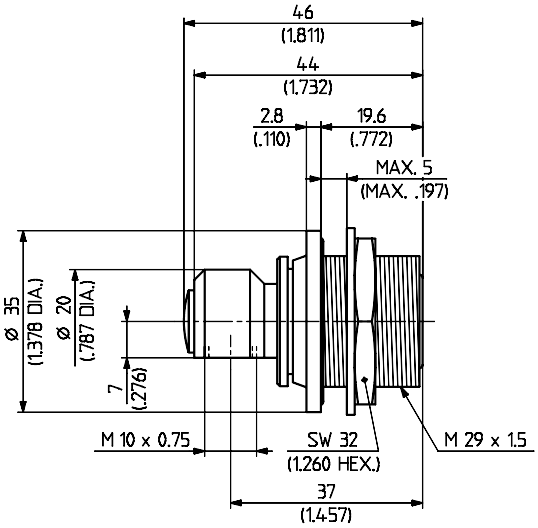

HUBER+SUHNER type	Item no.	Packaging	Mounting hole	Weight	Notes
24_716-50-0-1/003_-E	**22650517**	single	ML 110	126 g/4.44 oz.	cable entries see page 319/320

Cable groups see page 28 | Assembly tools see page 385 | Mounting holes see page 412

> panel jack (female)

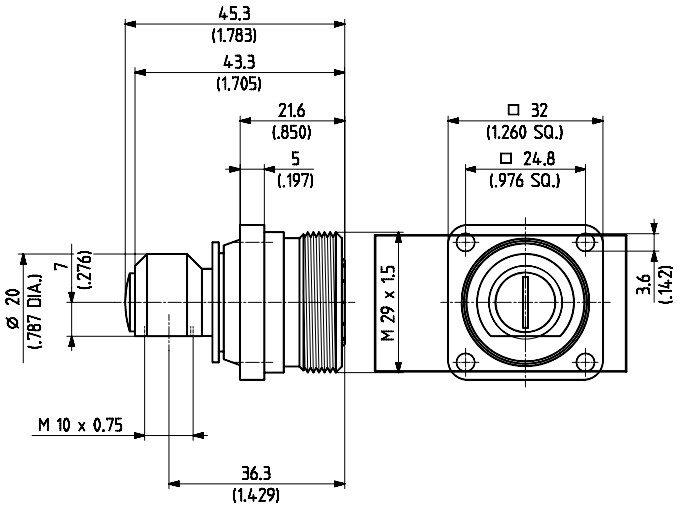

HUBER+SUHNER type	Item no.	Packaging	Mounting hole	Weight	Notes
25_716-50-0-2/003_-E	**22641434**	single	ML 27	124 g/4.34 oz.	cable entries see page 319/320

Cable entries (for use with all combi-heads)

> cable entry crimp

> taper sleeves see page 406

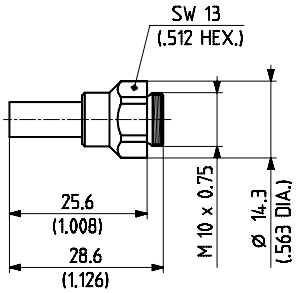

Fig. 1

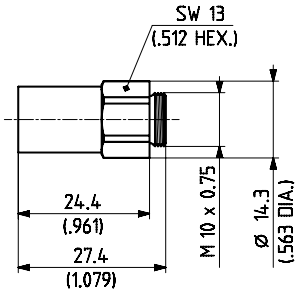

Fig. 2

HUBER+SUHNER type	Item no.	Cable group (example)	Packaging	Assembly instruction	Crimp insert	Fig.
71_Z-0-3-21/-33_-E	**22641435**	U7 (RG 58 C/U)	single	9084	B	1
71_Z-0-3-22/-33_-E	**22641436**	U9 (RG 223/U)	single	9084	B	1
71_Z-0-7-21/-33_-E	**22641440**	U29 (RG 213/U)	single	9087	D	2
71_Z-0-7-22/-33_-E	**22641441**	U32 (RG 214/U)	single	9087	D	2

Cable groups see page 28 Assembly tools see page 385 Mounting holes see page 412

> cable entry pressure sleeve

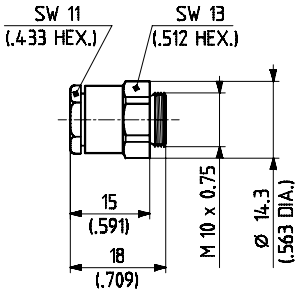

Fig. 1

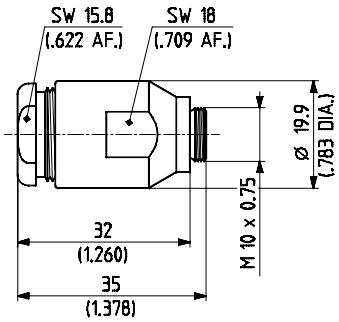

Fig. 2

HUBER+SUHNER type	Item no.	Cable group (example)	Packaging	Assembly instruction	fig.
71_Z-0-3-24/-33_-E	**22641438**	U7, 10 (RG 58C/U)	single	9085	1
71_Z-0-7-23/-33_-E	**22641442**	U28 (RG 213/U)	single	9088	2
71_Z-0-7-24/-33_-E	**22641443**	U33 (RG 214/U)	single	9088	2

RECEPTACLES WITH SOLDER END

Receptacles, plugs (male)

> panel mounted
> fastening screws see page 407
> flange with O-ring
> centre contact captivated for torque

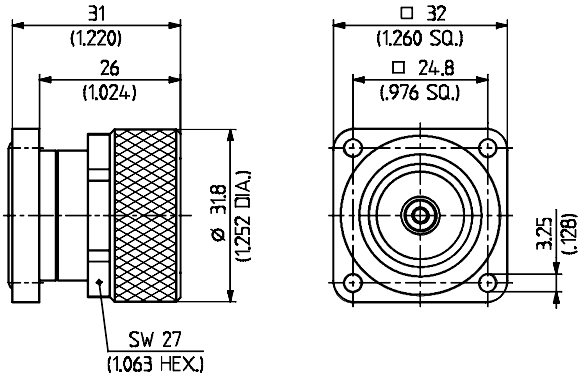

HUBER+SUHNER type	Item no.	Packaging	Weight	Notes
13_716-50-0-4/003_-V	**22658959**	bulk 20 pcs.	98 g/6.00 oz.	centre conductor with threaded stud M3

Cable groups see page 28 | Assembly tools see page 385 | Mounting holes see page 412

Receptacles, jacks (female)

> panel mounted

> fastening screws see page 407

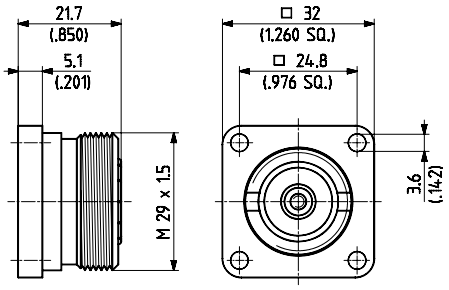

Fig. 1

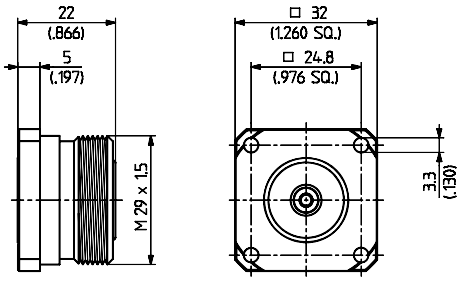

Fig. 2

HUBER+SUHNER type	Item no.	Packaging	Mounting hole	Weight	Notes	Fig.
23_716-50-0-1/003_-E	**22544102**	single	ML 27	75 g/2.65 oz.	centre conductor with threaded stud M3	1
23_716-50-0-57/003_-V	**23015661**	bulk 20 pcs.		80 g/2.80 oz.	centre conductor with threaded stud M3	2

PROTECTIVE CAPS

> protective cap for plug

> made of plastic

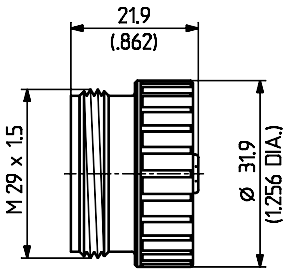

HUBER+SUHNER type	Item no.	Packaging	Notes
61_716-0-0-3/—_-H	**23005876**	bulk 100 pcs.	

> protective cap for jack

> made of plastic

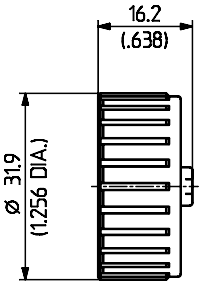

HUBER+SUHNER type	Item no.	Packaging	Notes
62_716-0-0-4/—_-H	**23005877**	bulk 100 pcs.	water protection according to IP 68

Cable groups see page 28 Assembly tools see page 385 Mounting holes see page 412

A FURTHER HUBER+SUHNER PRODUCT GROUP!

RF power splitters

Details on this product are to be found in the catalogue, Item no. 23041087 (in Enblish only). Get your copy free of charge at **www.hubersuhner.com.**

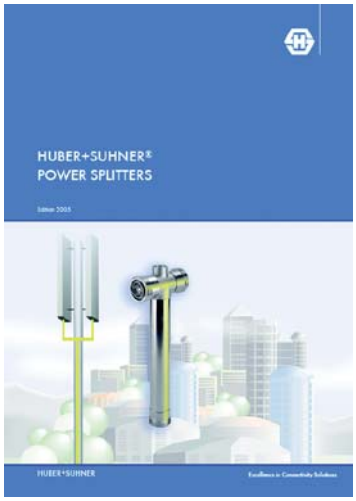

HUBER+SUHNER® QUICK-FIT COAXIAL CONNECTORS

DESCRIPTION

HUBER+SUHNER QUICK-FIT connectors are worldwide approved N and 7/16 connectors for foam dielectric corrugated copper tube cables. They offer a greatly simplified and economic approach to cable preparation and assembly. The product line meets the requirements of multi-carrier, high-channel-count transceivers such as base stations of today's mobile communication infrastructure networks.
The cable entries support standard foam dielectric corrugated copper tube cables $^{1}/_{2}$", $^{7}/_{8}$", $1^{1}/_{4}$" and $1^{5}/_{8}$" and $^{1}/_{2}$" highflex SUCOFEED as well as equivalent products from Andrew, RFS (Kabelmetal) and NK-Cables.

CONTENTS PAGE

FEATURES

- **low, stable and reproducible PIM (Passive Intermodulation Product)**
  - typically -165 dBc
  - excellent performance under mechanical stress and severe environmental conditions
- **safe assembly process performance**
  - in-field termination with reproducible electrical performance
- **quick and easy assembly**
  - 2 main connector parts, 4 steps in less than 4 minutes
- **high IP rating**
  - IP 68
- **cable multi-brand compatibility**

APPLICATIONS

- **antenna links and internal connections of mobile phone base stations**
- **jumper cables and feeder lines**
- **Radio in the Local Loop (RLL) and WiMAX base stations**
- **in general radio transceivers with high requirements for low attenuation, PIM and VSWR**

TECHNICAL DATA

ELECTRICAL DATA	REQUIREMENTS
Impedance	50 Ω
Frequency range (for connector interface)	N: DC ... 11 GHz 7/16: DC ... 7.5 GHz
VSWR	≤ 1.06 (RL ≥ 30 dB); f ≤ 2.5 GHz
VSWR for types marked with (R)	≤ 1.06 (RL ≥ 30 dB); f ≤ 2.0 GHz
PIM[1)]	better than -155 dBc

[1)] Carrier to 3rd order intermodulation product ratio with 2 x 20 W (43 dBm) carrier power, f ≤ 1.88 GHz

MECHANICAL DATA	REQUIREMENTS
Coupling nut torque	N: 0.68 ... 1.13 Nm / *0.49 ... 0.82 ft lb.* 7/16: 25 ... 30 Nm / *18.05 .. 21.66 ft lb.*
Recommended coupling nut torque	N: 3 Nm / *2.2 ft lb.* with 100 matings max
Coupling nut retention force	N: ≥ 450 N / *101.2 lbs.* 7/16: ≥ 1000 N / *225.0 lbs.*
Centre contact	captivated
Durability (matings)	≥ 500

ENVIRONMENTAL DATA	REQUIREMENTS
Temperature range	– 40°C ... + 85°C / – *40 °F ... + 185 °F*
IP rating	IP 68 (acc. to IEC 60529)

MATERIAL DATA		
CONNECTOR PART	**MATERIAL**	**PLATING**
Cable entry	brass	SUCOPLATE®
Connector head Outer contact Centre contact	brass brass spring bronze	silver
Insulators	PTFE or PFA	
Gaskets	rubber	

Some connectors may have a specification that differs from the above mentioned data.

The products are designed and guaranteed to pass the above mentioned test procedures. Any additional or different requirement arising from specific applications or environmental conditions which is not covered by these test procedures is subject to request.

SERIES 7/16

Straight cable plugs (male)

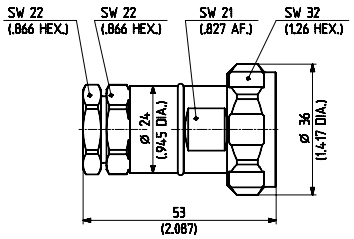

HUBER+SUHNER type	Item no.	Cable group (example)	Packaging	Assembly instruction	Weight
11_716-50-9-9/003_-E	**22660309**	M9 (SUCOFEED_½_HF)	single	0000179418	126 g/4.41 oz.

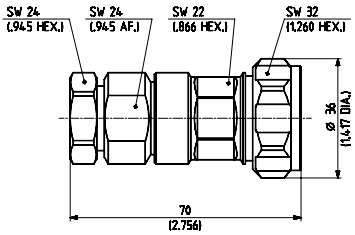

Fig. 1

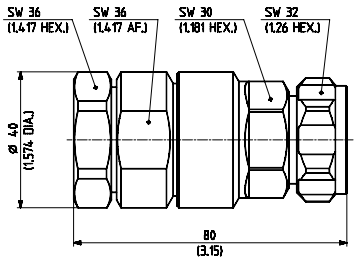

Fig. 2

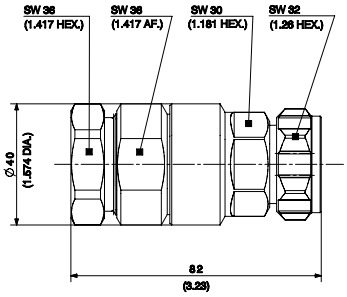

Fig. 3

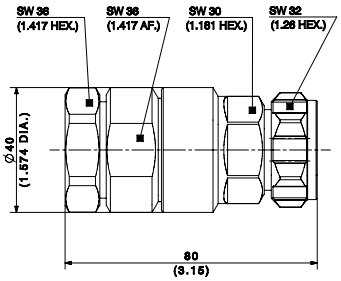

Fig. 4

HUBER+SUHNER type	Item no.	Cable group (example)	Packaging	Assembly instruction	Weight	Fig.
11_716-50-12-10/003_-E	**22658311**	M12 (SUCOFEED_½)	single	0000179113	169 g/5.92 oz.	1
11_716-50-23-10/003_-E	**23000309**	M23 (SUCOFEED_7/8)	single	0000180164	327 g/11.4 oz.	2
11_716-50-23-13/003_-E	**84017916**	M25(SUCOFEED_7/8_LA)	single	0000243692	333 g/11.7 oz.	3
11_716-50-23-14/003_-E	**84018237**	M24(SUCOFEED_7/8_HF)	single	0000233737	333 g/11.7 oz.	4

Cable groups see page 28 Assembly tools see page 385 Mounting holes see page 412

Straight cable plugs (male)

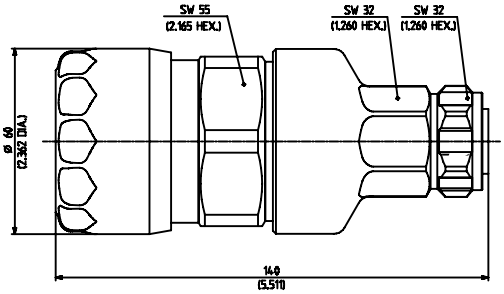

Fig. 1

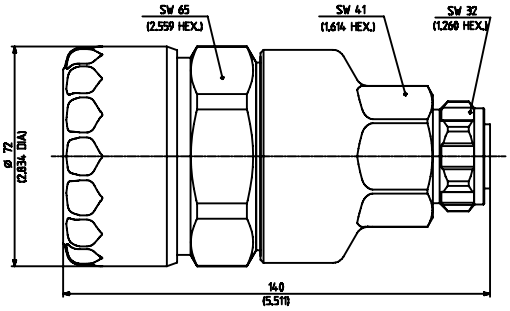

Fig. 2

HUBER+SUHNER type	Item no.	Cable group (example)	Packaging	Assembly instruction	Weight	Fig.
11_716-50-32-2/003_-Y	**22658187**	M32 (SUCOFEED_1_¼)	single	0000179128	1016 g/35.6 oz.	1 **(R)**
11_716-50-42-2/003_-Y	**22658185**	M42 (SUCOFEED_1_5/8)	single	0000179128	1298 g/45.4 oz.	2 **(R)**

(R) **see VSWR on page 324**

Right angle cable plugs (male)

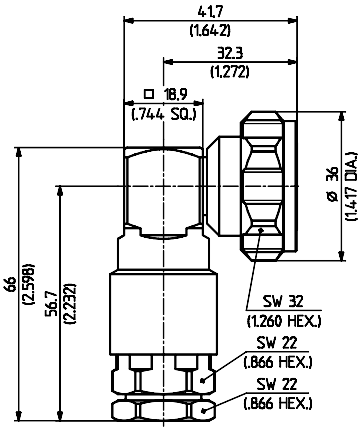

Fig. 1

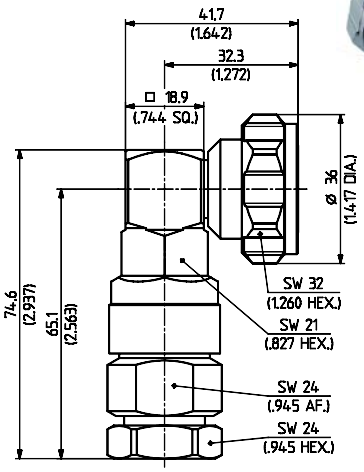

Fig. 2

HUBER+SUHNER type	Item no.	Cable group (example)	Packaging	Assembly instruction	Weight	Fig.
16_716-50-9-5/003_-E	**23007298**	M9 (SUCOFEED_½_HF)	single	0000179418	180 g/6.30 oz.	1
16_716-50-12-11/003_-E	**23011827**	M12 (SUCOFEED_½)	single	0000179113	223 g/7.8 oz.	2

Cable groups see page 28 Assembly tools see page 385 Mounting holes see page 412

Straight cable jacks (female)

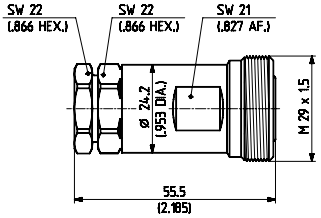

HUBER+SUHNER type	Item no.	Cable group (example)	Packaging	Assembly instruction	Weight
21_716-50-9-9/003_-E	**23660310**	M9 (SUCOFEED_½_HF)	single	0000179418	120 g/4.20 oz.

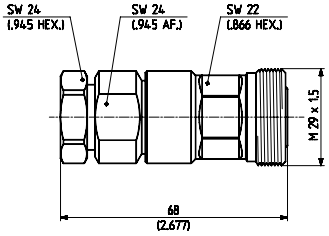

Fig. 1

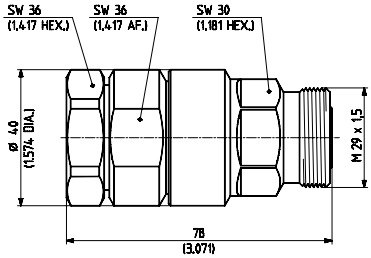

Fig. 2

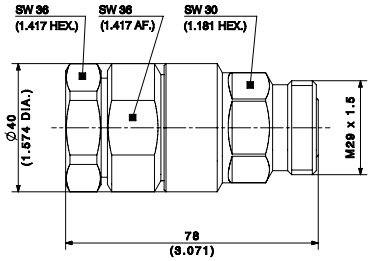

Fig. 3

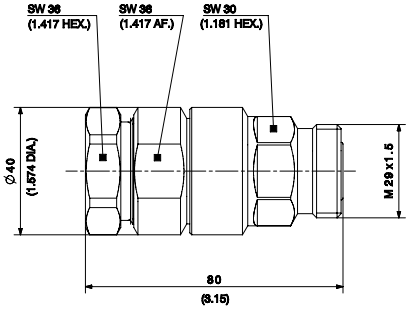

Fig. 4

HUBER+SUHNER type	Item no.	Cable group (example)	Packaging	Assembly instruction	Weight	Fig.
21_716-50-12-10/003_-E	**22658313**	M12 (SUCOFEED_½)	single	0000179113	153 g/5.36 oz.	1
21_716-50-23-10/003_-E	**23000310**	M23 (SUCOFEED_7/8)	single	0000180164	315 g/11.0 oz.	2
21_716-50-23-12/003_-E	**84018251**	M24(SUCOFEED_7/8_HF)	single	0000233737	318 g/11.2 oz.	3
21_716-50-23-13/003_-E	**84022255**	M25(SUCOFEED_7/8_LA)	single	0000243692	318 g/11.2 oz.	4

Cable groups see page 28 Assembly tools see page 385 Mounting holes see page 412

Straight cable jacks (female)

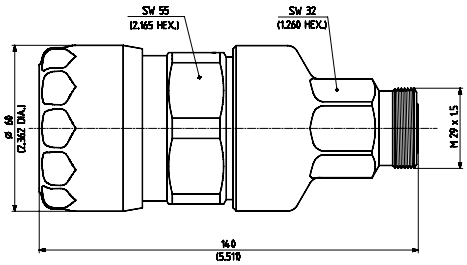

Fig. 1

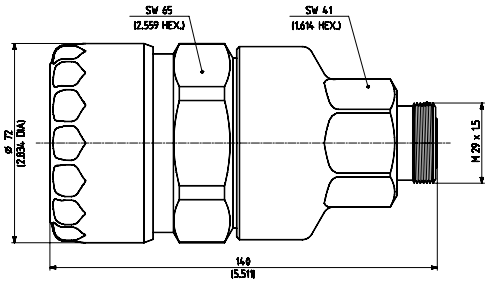

Fig. 2

HUBER+SUHNER type	Item no.	Cable group (example)	Packaging	Assembly instruction	Weight	Fig.
21_716-50-32-2/003_-Y	**22658188**	M32 (SUCOFEED_1_¼)	single	0000179128	1011 g/35.4 oz.	1 **(R)**
21_716-50-42-2/003_-Y	**22658186**	M42 (SUCOFEED_1_5/8)	single	0000179128	1291 g/45.2 oz.	2 **(R)**

(R) **see VSWR on page 324**

SERIES N

Straight cable plugs (male)

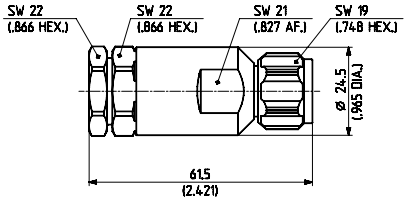

HUBER+SUHNER type	Item no.	Cable group (example)	Packaging	Assembly instruction	Weight
11_N-50-9-9/003_-E	**22660311**	M9 (SUCOFEED_½_HF)	single	0000179418	112 g/3.92 oz.

Cable groups see page 28 | Assembly tools see page 385 | Mounting holes see page 412

Straight cable plugs (male)

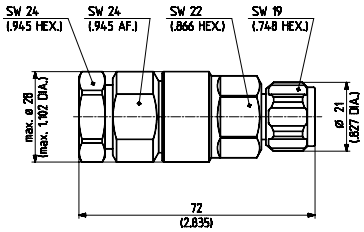

Fig. 1

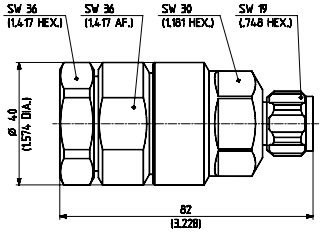

Fig. 2

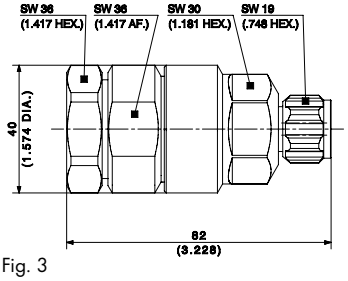

Fig. 3

HUBER+SUHNER type	Item no.	Cable group (example)	Packaging	Assembly instruction	Weight	Fig.
11_N-50-12-10/003_-E	**22658314**	M12 (SUCOFEED_½)	single	0000179113	143 g/5.00 oz.	1
11_N-50-23-10/003_-E	**23000308**	M23 (SUCOFEED_$^{7}/_{8}$)	single	0000180164	305 g/10.7 oz.	2
11_N-50-23-11/003_-E	**84018250**	M24(SUCOFEED_$^{7}/_{8}$_HF)	single	0000233737	312 g/11.0 oz.	3

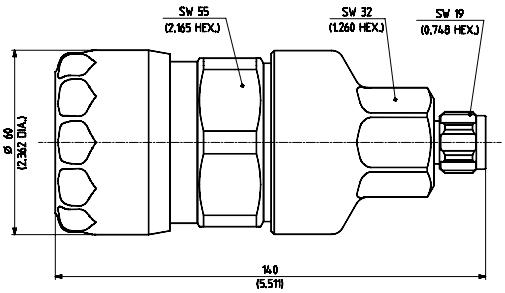

Fig. 1

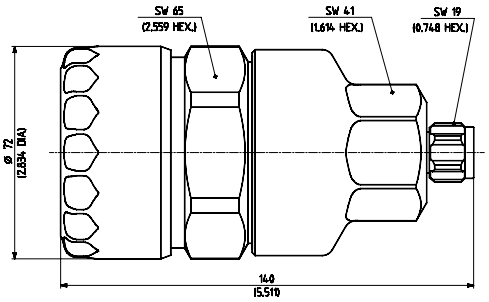

Fig. 2

HUBER+SUHNER type	Item no.	Cable group (example)	Packaging	Assembly instruction	Weight	Fig.
11_N-50-32-2/003_-Y	**22658189**	M32 (SUCOFEED_1_¼)	single	0000179128	990 g/34.7 oz.	1 **(R)**
11_N-50-42-2/003_-Y	**22658191**	M42 (SUCOFEED_1_$^{5}/_{8}$)	single	0000179128	1285 g/45.0 oz.	2 **(R)**

(R) **see VSWR on page 324**

Cable groups see page 28 | Assembly tools see page 385 | Mounting holes see page 412

Right angle cable plugs (male)

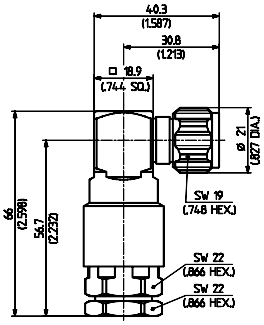

Fig. 1

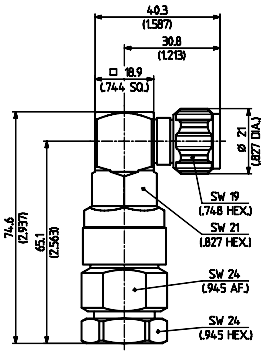

Fig. 2

HUBER+SUHNER type	Item no.	Cable group (example)	Packaging	Assembly instruction	Weight	Fig.
16_N-50-9-6/003_-E	**23007299**	M9 (SUCOFEED_½_HF)	single	0000179418	164 g/5.75 oz.	1
16_N-50-12-9/003_-E	**23011828**	M12 (SUCOFEED_½)	single	0000179113	208 g/7.30 oz.	2

Straight cable jacks (female)

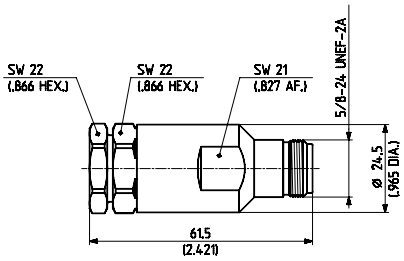

HUBER+SUHNER type	Item no.	Cable group (example)	Packaging	Assembly instruction	Weight
21_N-50-9-9/003_-E	**22660312**	M9 (SUCOFEED_½_HF)	single	0000179418	113 g/3.96 oz.

Cable groups see page 28 Assembly tools see page 385 Mounting holes see page 412

Straight cable jacks (female)

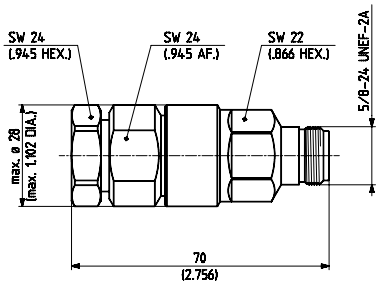

Fig. 1

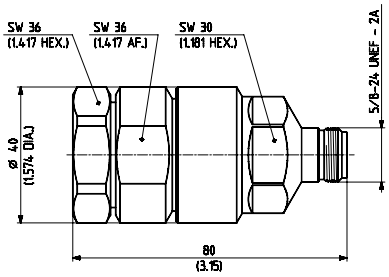

Fig. 2

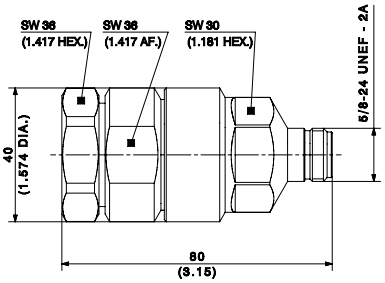

Fig. 3

HUBER+SUHNER type	Item no.	Cable group (example)	Packaging	Assembly instruction	Weight	Fig.
21_N-50-12-10/003_-E	**22658315**	M12 (SUCOFEED_½)	single	0000179113	142 g/4.97 oz.	1
21_N-50-23-10/003_-E	**23000307**	M23 (SUCOFEED_$^{7}/_{8}$)	single	0000180164	300 g/10.5 oz.	2
21_N-50-23-11/003_-E	**84018249**	M24(SUCOFEED_$^{7}/_{8}$_HF)	single	0000233737	313 g/11.0 oz.	3

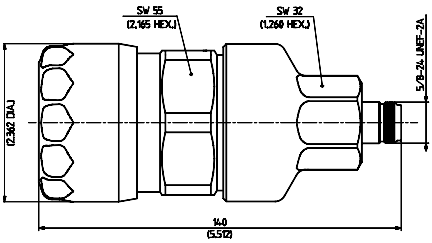

Fig. 1

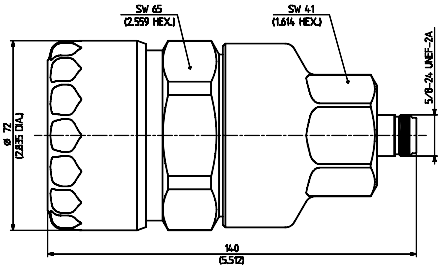

Fig. 2

HUBER+SUHNER type	Item no.	Cable group (example)	Packaging	Assembly instruction	Weight	Fig.
21_N-50-32-2/003_-Y	**22658190**	M32 (SUCOFEED_1_¼)	single	0000179128	989 g/34.6 oz.	1 **(R)**
21_N-50-42-2/003_-Y	**22658192**	M42 (SUCOFEED_1_$^{5}/_{8}$)	single	0000179128	1279 g/44.8 oz.	2 **(R)**

(R) **see VSWR on page 324**

Cable groups see page 28 | Assembly tools see page 385 | Mounting holes see page 412

A FURTHER HUBER+SUHNER PRODUCT!

SMART QUICK-FIT connectors

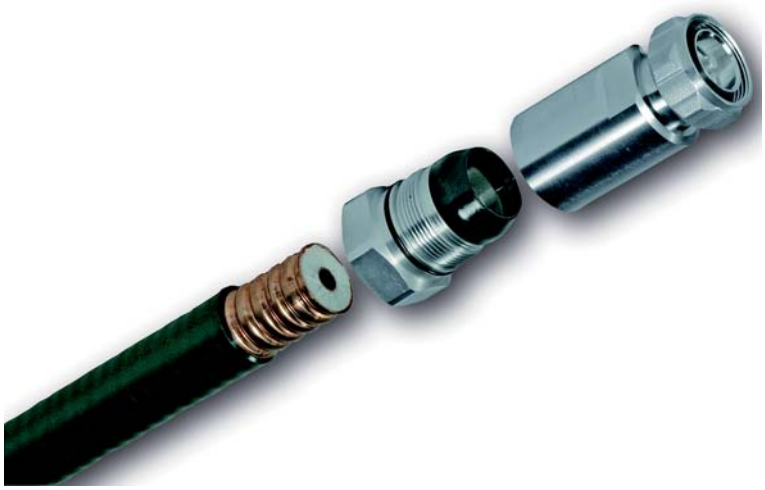

Details on this product are to be found in the brochure, Item no. 84028926 (in Enblish only). Get your copy free of charge at **www.hubersuhner.com.**

ADAPTORS WITHIN SERIES

HUBER+SUHNER is manufacturing a wide range of adaptors within series. Please find hereafter a selection of them.

If the requested type is not mentioned, please do not hesitate to contact the Sales Department of our Subsidiary or Agent in your country.

ADAPTORS WITHIN SERIES

MMCX	**H+S type Item no.**	**31_MMCX-50-0-1/111_OE 22645960**
jack/jack (f)		
Packaging	single	
Material:	brass/gold	
VSWR:	DC - 3 GHz: ≤ 1.10	3 - 6 GHz: ≤ 1.28

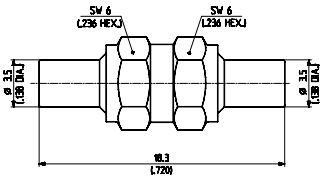

MCX 50Ω	**H+S type Item no.**	**32_MCX-50-0-3/111_NE 22653002**
plug/plug (m)		
Packaging	single	
Material:	brass/gold	
VSWR	DC -1.5 GHz ≤ 1.06	1.5 - 6 GHz ≤ 1.22

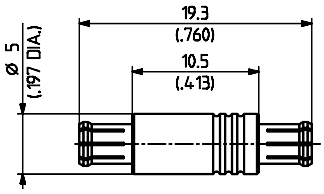

MMCX	**H+S type Item no.**	**34_MMCX-50-0-1/111_OE 22650516**
jack/jack (f)		
Packaging	single	
Material:	brass/gold	
Mounting hole	ML 88	
VSWR	DC - 1.5 GHz ≤ 1.06	1.5 - 6 GHz ≤ 1.22

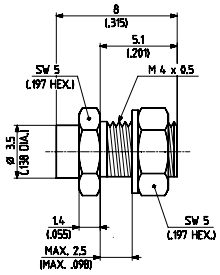

MCX 50Ω	**H+S type Item no.**	**34_MCX-50-0-2/111_NE 22649868**
jack/jack (f)		
Packaging	single	
Material:	brass/gold	
Mounting hole	ML 89	
VSWR	DC -1.5 GHz ≤ 1.06	1.5 - 6 GHz ≤ 1.22

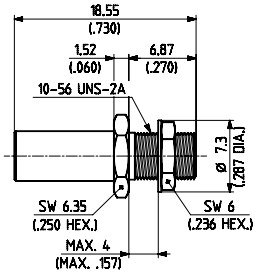

MCX 50Ω	**H+S type Item no.**	**31_MCX-50-0-1/111_NE 22543558**
jack/jack (f)		
Packaging	single	
Material:	brass/gold	
VSWR	DC -1 GHz ≤ 1.05	1 - 6 GHz ≤ 1.22

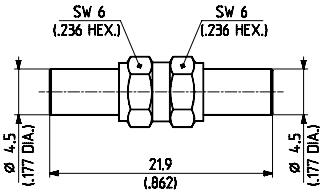

MCX 75Ω	**H+S type Item no.**	**34_MCX-75-0-1/111_NE 22649382**
jack/jack (f)		
Packaging	single	
Material:	brass/gold	
Mounting hole	ML 35	

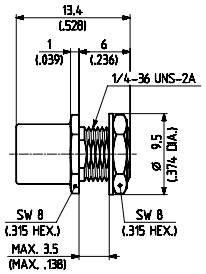

Material and plating descriptions may refer to the connector housing or outer contact.

SUCO* = SUCOPLATE®

SMB	H+S type Item no.	31_SMB-50-0-1/111_NE 22640221
jack/jack (f)		
Packaging	single	
Material:	brass/gold	
VSWR	DC - 4 GHz 1.03 + 0.08 f	

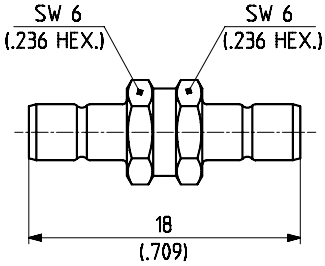

SMB	H+S type Item no.	46_SMB-50-0-2/111_NE 22640228
3 jacks (f)		
Packaging	single	
Material:	brass/gold	

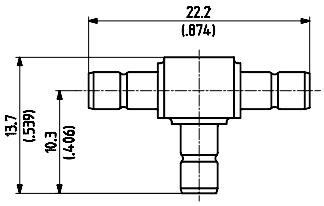

SMB	H+S type Item no.	32_SMB-50-0-1/111_NE 22640222	
plug/plug (m)	open entry		
Packaging	single		
Material:	brass/gold		
VSWR	DC - 1.5 GHz 1.03 + 0.18 f	1.5 - 4 GHz ≤ 1.30	

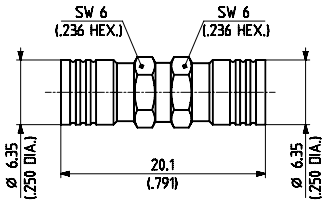

SMC	H+S type Item no.	31_SMC-50-0-1/111_NE 22640300
jack/jack (f)		
Packaging	single	
Material:	brass/gold	
VSWR	DC-10 GHz ≤ 1.08 + 0.15 f	

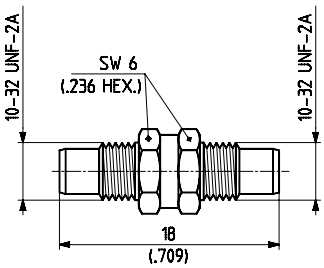

SMB	H+S type Item no.	34_SMB-50-0-2/111_NE 22640224	
jack/jack (f)			
Packaging	single		
Material: Mounting hole	brass/gold ML 11		
VSWR	DC - 2 GHz 1.04 + 0.1 f	2 - 4 GHz ≤ 1.24	

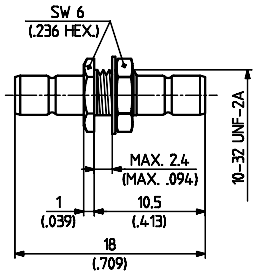

SMC	H+S type Item no.	32_SMC-50-0-1/111_NE 22543822
plug/plug (m)		
Packaging	single	
Material:	brass/gold	
VSWR	DC-10 GHz ≤ 1.08 + 0.10 f	

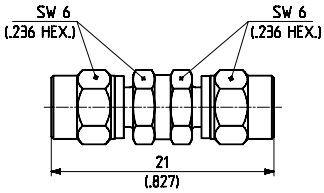

SMB	H+S type Item no.	43_SMB-50-0-2/111_NE 22640226
1 plug (m), 2 jacks (f)	open entry	
Packaging	single	
Material:	brass/gold	

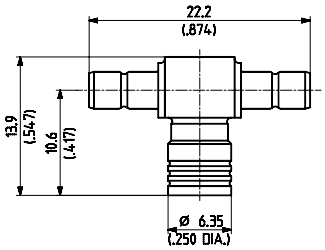

SMC	H+S type Item no.	34_SMC-50-0-2/111_NE 22640302
jack/jack (f)		
Packaging	single	
Material: Mounting hole	brass/gold ML 11	
VSWR	DC-10 GHz ≤ 1.03 + 0.08 f	

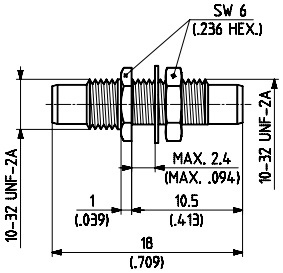

Adapt.

Material and plating descriptions may refer to the connector housing or outer contact.

SUCO* = SUCOPLATE®

SMC	H+S type Item no.	43_SMC-50-0-2/111_NE 22640305

1 plug (m),
2 jacks (f)

Packaging: single

Material: brass/gold

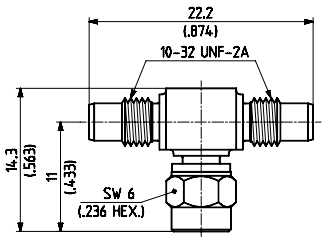

SMA	H+S type Item no.	32_SMA-50-0-1/111_NE 22640151

plug/plug (m)

Packaging: single

Material: CuBe/gold

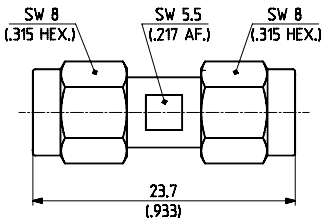

VSWR: DC-18 GHz
≤ 1.05 + 0.005 f

SMC	H+S type Item no.	46_SMC-50-0-2/111_NE 22640307

3 jacks (f)

Packaging: single

Material: brass/gold

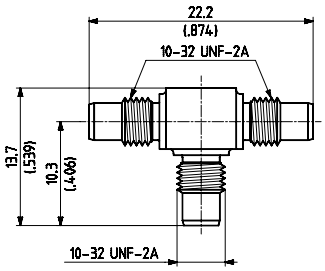

SMA	H+S type Item no.	32_SMA-50-0-52/199_NE 22643689

plug/plug (m)

Packaging: single

Material: stainless steel

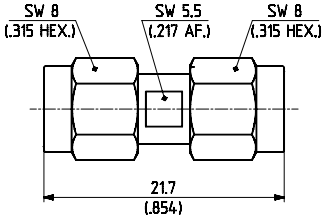

VSWR: DC-18 GHz
≤ 1.05 + 0.005 f

SMA	H+S type Item no.	31_SMA-50-0-1/111_NE 22640150

jack/jack (f)

Packaging: single

Material: CuBe/gold

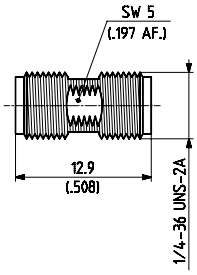

VSWR: DC-18 GHz
≤ 1.05 + 0.005 f

SMA	H+S type Item no.	33_SMA-50-0-1/111_NE 22641119

plug/jack(m/f)

Packaging: single

Material: CuBe/gold

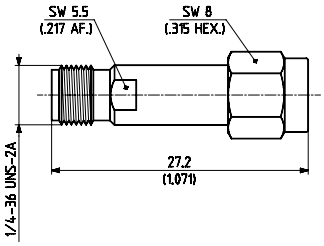

VSWR: DC-18 GHz
≤ 1.05 + 0.005 f

SMA	H+S type Item no.	31_SMA-50-0-51/199_NE 22641486

jack/jack (f)

Packaging: single

Material: stainless steel

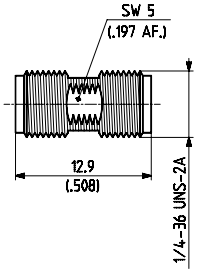

VSWR: DC-18 GHz
≤ 1.05 + 0.005 f

SMA	H+S type Item no.	33_SMA-50-0-51/199_NE 22644253

plug/jack (m/f)

Packaging: single

Material: stainless steel

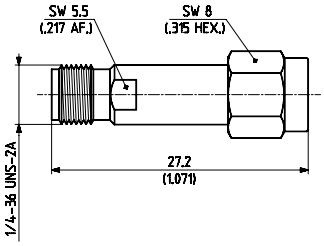

VSWR: DC-18 GHz
≤ 1.05 + 0.005 f

Material and plating descriptions may refer to the connector housing or outer contact.

SUCO* = SUCOPLATE®

SMA	H+S type Item no.	34_SMA-50-0-1/111_NH 22649842

jack/jack (f)

Packaging bulk 100 pcs.

Material: CuBe/gold
Mounting hole ML 35

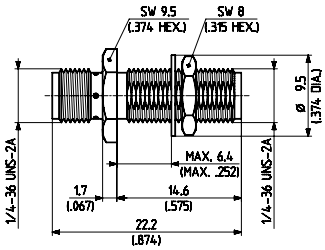

VSWR DC-18 GHz
≤ 1.05 + 0.005 f

SMA	H+S type Item no.	46_SMA-50-0-1/111_NE 22543357

3 jacks (f)

Packaging single

Material: CuBe/gold

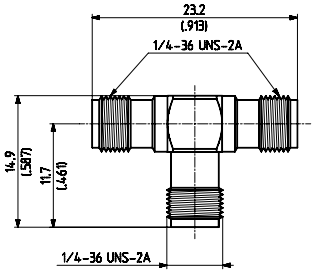

SMA	H+S type Item no.	34_SMA-50-0-51/199_NE 22544823

jack/jack (f)

Packaging single

Material: stainless steel
Mounting hole ML 35

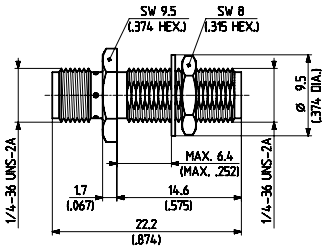

VSWR DC-18 GHz
≤ 1.05 + 0.005 f

SMA	H+S type Item no.	53_SMA-50-0-51/199_NE 22642655

plug/jack (m/f)

Packaging single

Material: stainless steel

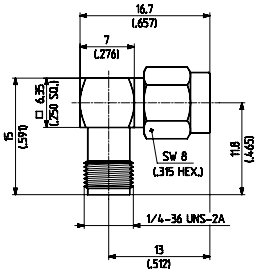

VSWR DC - 14 GHz
≤ 1.02 + 0.03 f

14 - 18 GHz
≤ 1.92

SMA	H+S type Item no.	34_SMA-50-0-3/111_NE 22641297

jack/jack (f) hermet. sealed

Packaging single

Material: CuBe/gold
Mounting hole ML 38
Leak rate 10^{-6} Torr 1/sec.
RoHS compliant alternative on request (atm cc/s)

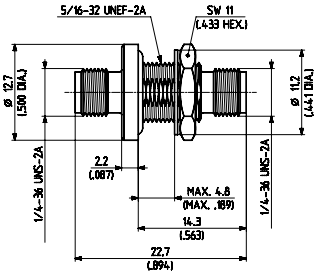

VSWR DC - 3 GHz
≤ 1.1

3 - 7 GHz
≤ 1.2

7 - 18 GHz
≤ 1.3

PC3.5	H+S type Item no.	31_PC35-50-0-1/199_UE 22644360

jack/jack (f)

Packaging single

Material: stainless steel
Electrical length 14.1 +/- 0.1 mm

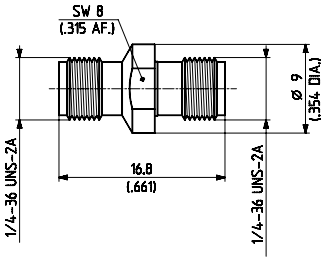

VSWR DC - 18 GHz
≤ 1.08

18 - 26.5 GHz
≤ 1.15

SMA	H+S type Item no.	43_SMA-50-0-1/111_NE 22543356

1 plug (m),
2 jacks (f)
Packaging single

Material: CuBe/gold

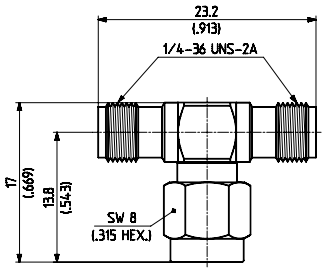

PC3.5	H+S type Item no.	32_PC35-50-0-1/199_UE 22644361

plug/plug (m)

Packaging single

Material: stainless steel
Electrical length 14.1 +/- 0.1 mm

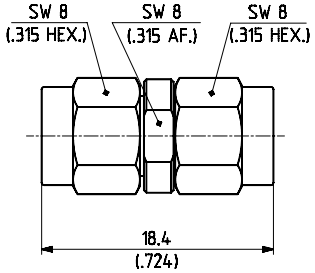

VSWR DC - 18 GHz
≤ 1.08

18 - 26.5 GHz
≤ 1.15

Adapt.

Material and plating descriptions may refer to the connector housing or outer contact.

SUCO* = SUCOPLATE®

PC3.5	H+S type Item no.	33_PC35-50-0-1/199_UE 22644362

plug/jack (m/f)

Packaging: single

Material: stainless steel

Electrical length: 14.1 +/- 0.1 mm

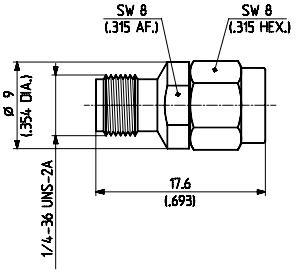

VSWR	DC - 18 GHz	18 - 26.5 GHz
	≤ 1.08	≤ 1.15

PC3.5	H+S type Item no.	39_PC35-50-0-1/199_UE 23003664

plug/jack (m/f)

Packaging: single

Material: stainless steel

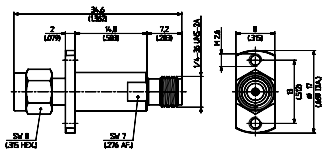

VSWR	DC - 4 GHz	4 - 10	10 - 16	16 - 26.5 GHz
	≤ 1.03	≤ 1.07	≤ 1.12	≤ 1.22

PC3.5	H+S type Item no.	31_PC35-50-0-2/199_NE 23020456

jack/jack (f)

Packaging: single

Material: stainless steel

Electrical length: 25.4+/-2.6 mm

Note: Adaptor for QMA calibration

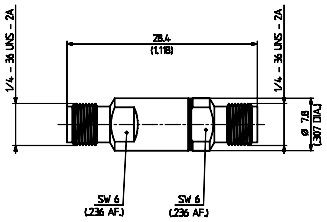

VSWR	DC - 1.5 GHz	1.5 - 6	6 - 18 GHz
	≤ 1.036	≤ 1.065	≤ 1.22

PC3.5	H+S type Item no.	32_PC35-50-0-2/199_NE 23020457

plug/plug (m)

Packaging: single

Material: stainless steel

Electrical length: 25.4+/-2.6 mm

Note: Adaptor for QMA calibration

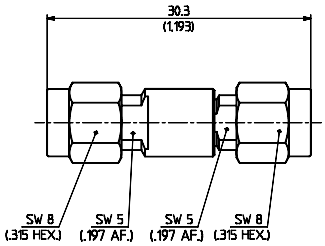

VSWR	DC - 1.5 GHz	1.5 - 6	6 - 18 GHz
	≤ 1.036	≤ 1.065	≤ 1.22

PC3.5	H+S type Item no.	33_PC35-50-0-2/199_NE 23020453

plug/jack(m/f)

Packaging: single

Material: stainless steel

Electrical length: 25.4+/-2.6 mm

Note: Adaptor for QMA calibration

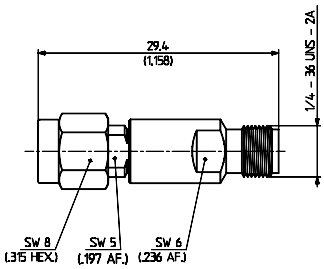

VSWR	DC - 1.5 GHz	1.5 - 6	6 - 18 GHz
	≤ 1.036	≤ 1.065	≤ 1.22

SK	H+S type Item no.	31_SK-50-0-1/199_NE 23004726

jack/jack (f)

Packaging: single

Material: stainless steel

Electrical length: 16.1+/-0.1 mm

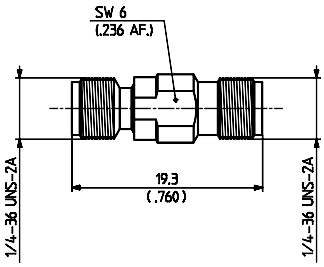

VSWR	DC - 40 GHz
	≤ 1.20

SK	H+S type Item no.	32_SK-50-0-1/199_NE 23004727

plug/plug (m)

Packaging: single

Material: stainless steel

Electrical length: 16.1+/-0.1 mm

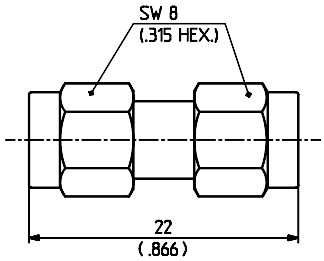

VSWR	DC - 40 GHz
	≤ 1.20

SK	H+S type Item no.	33_SK-50-0-1/199_NE 23004728

plug/jack (m/f)

Packaging: single

Material: stainless steel

Electrical length: 16.1+/-0.1 mm

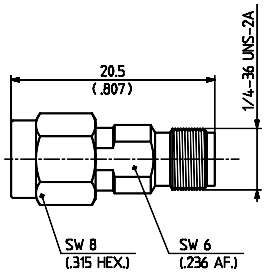

VSWR	DC - 40 GHz
	≤ 1.20

Material and plating descriptions may refer to the connector housing or outer contact.

SUCO* = SUCOPLATE®

SK	H+S type Item no.	34_SK-50-0-51/199_NE 22658969

jack/jack (f)

Packaging single

Material: stainless steel
Mounting hole ML 35

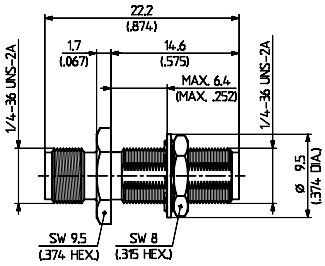

VSWR DC - 40 GHz
≤ 1.02 + 0.01

QLA	H+S type Item no.	45_QLA-01-0-1/112_NE 22640033

2 jacks (f)
1 plug (m)
Packaging single

Material: brass/nickel

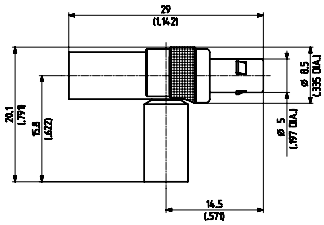

QLA	H+S type Item no.	31_QLA-01-0-1/112_NE 22640028

jack/jack (f)

Packaging single

Material: brass/nickel

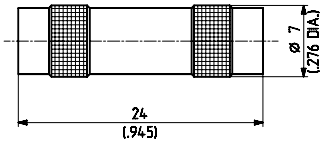

QLA	H+S type Item no.	53_QLA-01-0-1/112_NE 22640034

plug/jack (m/f)

Packaging single

Material: brass/nickel

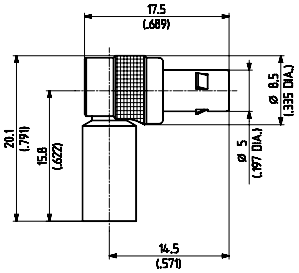

QLA	H+S type Item no.	34_QLA-01-0-2/112_NE 22640031

jack/jack (f)

Packaging single

Material: brass/nickel
Mounting hole ML 99

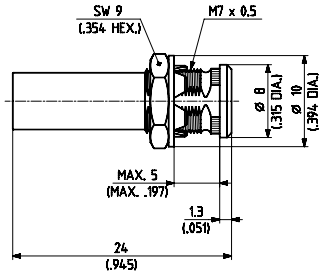

Note ML 99

QMA	H+S type Item no.	31_QMA-50-0-1/199_NE 23023171

jack/jack (f)

Packaging single

Material: stainless steel

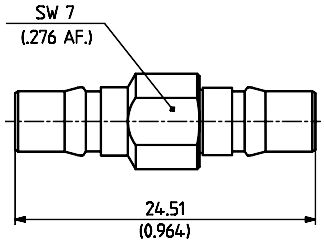

VSWR DC - 1.5 GHz 1.5 - 6 GHz
≤ 1.036 ≤ 1.065

QLA	H+S type Item no.	43_QLA-01-0-1/112_NE 22640032

2 jacks (f)
1 plug (m)
Packaging single

Material: brass/nickel

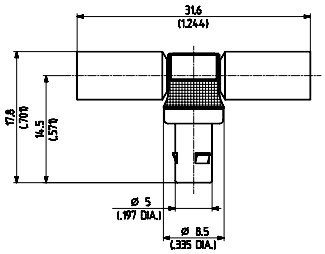

QMA	H+S type Item no.	32_QMA-50-0-1/1-_NE 23023199

plug/plug (m)

Packaging single

Material: stainless steel

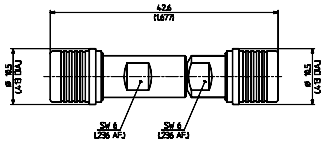

VSWR DC - 1.5 GHz 1.5 - 6 GHz
≤ 1.036 ≤ 1.065

Adapt.

Material and plating descriptions may refer to the connector housing or outer contact. SUCO* = SUCOPLATE®

QMA	H+S type Item no.	33_QMA-50-0-1/1–_NE 23023287

plug/jack (m/f)

Packaging single

Material: stainless steel

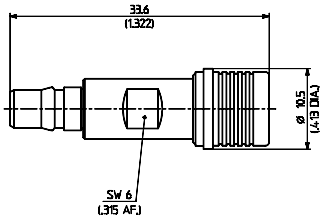

VSWR DC - 1.5 GHz ≤ 1.036 | 1.5 - 6 GHz ≤ 1.065

BNC 50 Ω	H+S type Item no.	34_BNC-50-0-1/133_UE 22652148

jack/jack (f)

Packaging single

Material: brass/SUCO*

Mounting hole ML 4

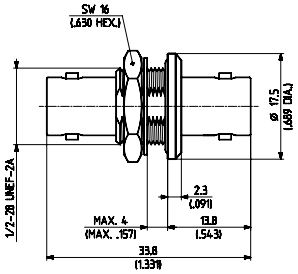

VSWR DC - 1.5 GHz ≤ 1.04 | 1.5 - 4 GHz ≤ 1.08 + 0.10 f

BNC 50 Ω	H+S type Item no.	31_BNC-50-0-1/133_NE 22540540

jack/jack (f)

Packaging single

Material: brass/SUCO*

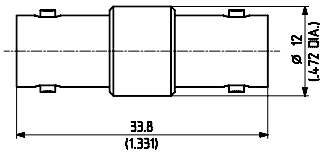

VSWR DC - 4 GHz ≤ 1.06 + 0.04 f

BNC 50 Ω	H+S type Item no.	34_BNC-50-0-2/133_NE 22540629

jack/jack (f) for insulated mounting

Packaging single

Material: brass/SUCO*

Mounting hole ML 22

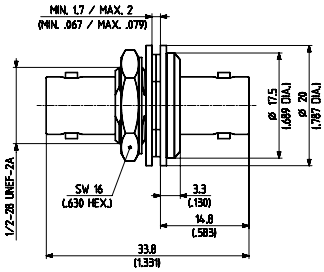

VSWR DC - 1.5 GHz ≤ 1.04 | 1.5 - 4 GHz ≤ 1.08 + 0.10 f

BNC 50 Ω	H+S type Item no.	32_BNC-50-0-1/133_NE 22540565

plug/plug (m)

Packaging single

Material: brass/SUCO*

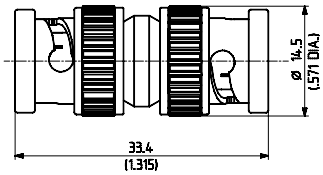

VSWR DC - 4 GHz ≤ 1.06 + 0.04 f

BNC 50 Ω	H+S type Item no.	34_BNC-50-0-6/100_NE 22540631

jack/jack (f) hermet.sealed

Packaging single

Material: CuBe/silver

Mounting hole ML 4

Leak rate 10^{-6} Torr 1/sec. (atm cc/s)

RoHS compliant alternative on request

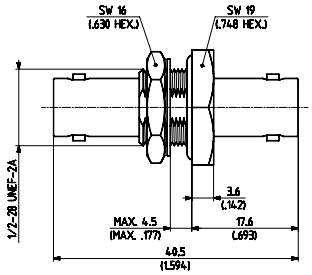

VSWR DC - 4 GHz ≤ 1.90

BNC 50 Ω	H+S type Item no.	34_BNC-50-0-1/133_NE 22540627

jack/jack (f)

Packaging single

Material: brass/SUCO*

Mounting hole ML 4

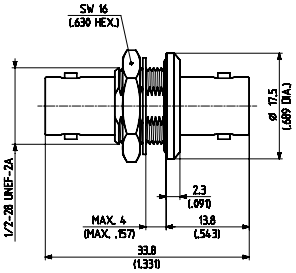

VSWR DC - 1.5 GHz ≤ 1.04 | 1.5 - 4 GHz ≤ 1.08 + 0.10 f

BNC 50 Ω	H+S type Item no.	37_BNC-50-0-1/133_NE 22540635

jack/jack (f)

Packaging single

Material: brass/SUCO*

Mounting hole ML 10

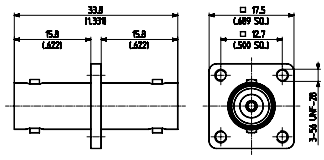

VSWR DC - 4 GHz ≤ 1.06 + 0.04 f

Material and plating descriptions may refer to the connector housing or outer contact. SUCO* = SUCOPLATE®

BNC 50 Ω	H+S type Item no.	37_BNC-50-0-2/133_NE 22540638

jack/jack (f)

Packaging single

Material: brass/SUCO*
Mounting hole ML 10

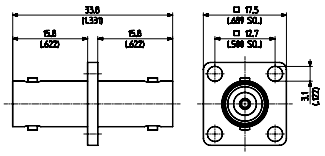

VSWR DC - 4 GHz
≤ 1.06 + 0.04 f

BNC 50 Ω	H+S type Item no.	53_BNC-50-0-1/133_NE 22540657

plug/jack (m/f)

Packaging single

Material: brass/SUCO*

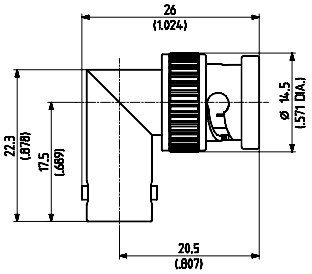

VSWR DC - 4 GHz
≤ 1.06 + 0.04 f

BNC 50 Ω	H+S type Item no.	43_BNC-50-0-1/133_NE 22540644

2 jacks (female)
1 plug (male)
Packaging single

Material: brass/SUCO*

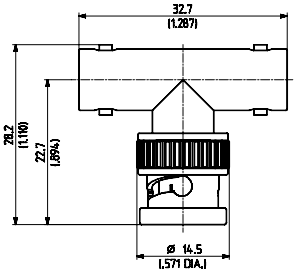

BNC 75 Ω	H+S type Item no.	31_BNC-75-0-1/133_NE 22541003

jack/jack (f)

Packaging single

Material: brass/SUCO*

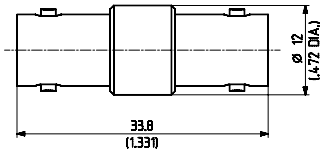

BNC 50 Ω	H+S type Item no.	45_BNC-50-0-2/133_NE 22652370

2 jacks (female)
1 plug (male)
Packaging single

Material: brass/SUCO*

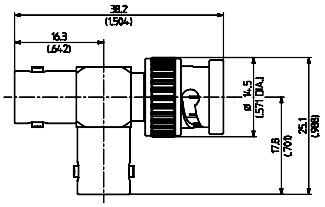

BNC 75 Ω	H+S type Item no.	32_BNC-75-0-1/133_NE 22541016

plug/plug (m)

Packaging single

Material: brass/SUCO*

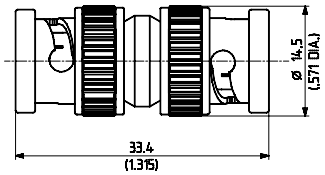

BNC 50 Ω	H+S type Item no.	46_BNC-50-0-1/133_NE 22540649

3 jacks (female)

Packaging single

Material: brass/SUCO*

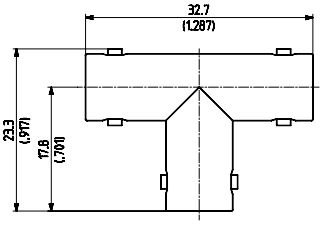

BNC 75 Ω	H+S type Item no.	34_BNC-75-0-1/133_NE 22541040

jack/jack (f)

Packaging single

Material: brass/SUCO*
Mounting hole ML 4

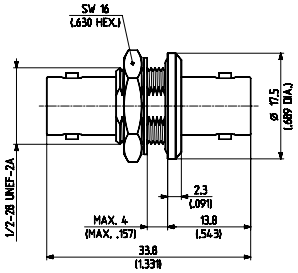

Material and plating descriptions may refer to the connector housing or outer contact.

SUCO* = SUCOPLATE®

BNC 75 Ω	H+S type Item no.	34_BNC-75-0-2/133_NE 22541042

jack/jack (f) — for insulated mounting

Packaging — single

Material: — brass/SUCO*

Mounting hole — ML 22

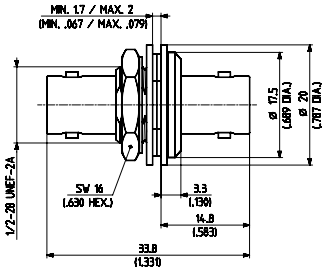

BNC 75 Ω	H+S type Item no.	45_BNC-75-0-1/133_NE 22541050

2 jacks (female)
1 plug (male)

Packaging — single

Material: — brass/SUCO*

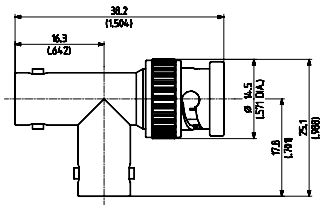

BNC 75 Ω	H+S type Item no.	37_BNC-75-0-1/133_NE 22541045

jack/jack (f)

Packaging — single

Material: — brass/SUCO*

Mounting hole — ML 10

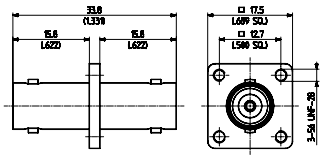

BNC 75 Ω	H+S type Item no.	46_BNC-75-0-1/133_NE 22541053

3 jacks (female)

Packaging — single

Material: — brass/SUCO*

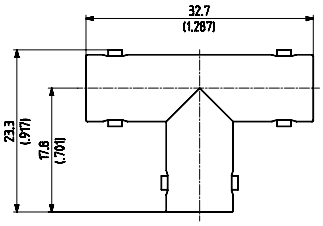

BNC 75 Ω	H+S type Item no.	37_BNC-75-0-2/133_NE 22541047

jack/jack (f)

Packaging — single

Material: — brass/SUCO*

Mounting hole — ML 10

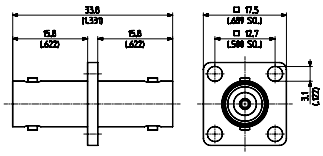

BNC 75 Ω	H+S type Item no.	53_BNC-75-0-1/133_NE 22541055

plug/jack (m/f)

Packaging — single

Material: — brass/SUCO*

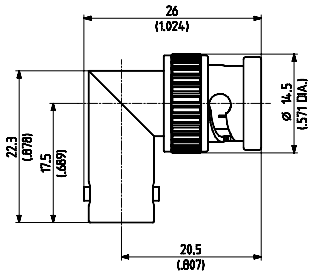

BNC 75 Ω	H+S type Item no.	43_BNC-75-0-1/133_NE 22541049

2 jacks (female)
1 plug (male)

Packaging — single

Material: — brass/SUCO*

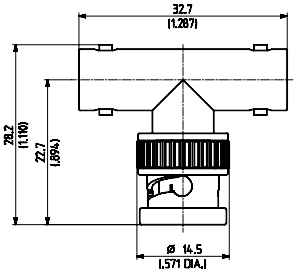

TNC 50 Ω	H+S type Item no.	31_TNC-50-0-1/133_NE 22640623

jack/jack (f)

Packaging — single

Material: — brass/SUCO*

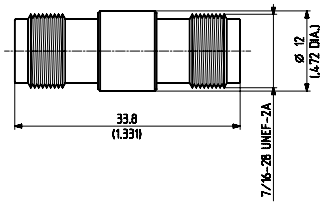

VSWR — DC - 11 GHz
≤ 1.06 + 0.15 f

Material and plating descriptions may refer to the connector housing or outer contact. SUCO* = SUCOPLATE®

TNC 50 Ω	H+S type Item no.	32_TNC-50-0-1/133_NE 22543407

plug/plug (m)

Packaging single

Material: brass/SUCO*

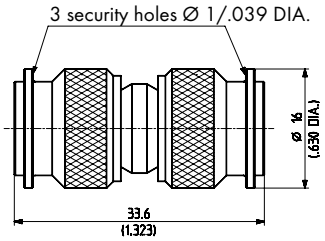

VSWR DC - 11 GHz
≤ 1.03 + 0.025 f

TNC 50 Ω	H+S type Item no.	37_TNC-50-0-1/133_NE 22640646

jack/jack (f)

Packaging single

Material: brass/SUCO*
Mounting hole ML 8

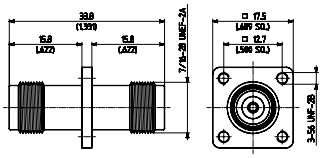

VSWR DC - 9 GHz
≤ 1.09 + 0.16 f
9 - 11 GHz
≤ 2.53

TNC 50 Ω	H+S type Item no.	33_TNC-50-0-1/133_NE 22543649

plug/jack(m/f)

Packaging single

Material: brass/SUCO*

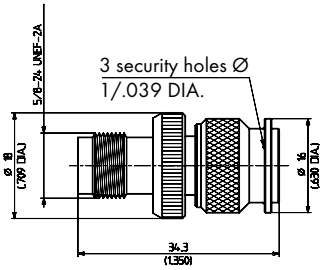

VSWR DC - 11 GHz
≤ 1.10 + 0.027 f

TNC 50 Ω	H+S type Item no.	37_TNC-50-0-2/133_NE 22640648

jack/jack (f)

Packaging single

Material: brass/SUCO*
Mounting hole ML 8

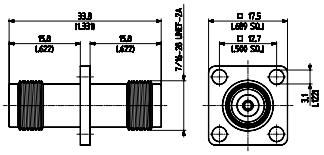

VSWR DC - 9 GHz
≤ 1.09 + 0.16 f
9 - 11 GHz
≤ 2.53

TNC 50 Ω	H+S type Item no.	34_TNC-50-0-1/133_NE 22640643

jack/jack (f)

Packaging single

Material: brass/SUCO*
Mounting hole ML 4

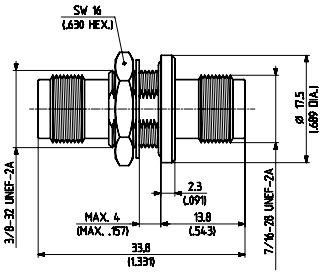

VSWR DC - 2 GHz
≤ 1.05
2 - 8 GHz
≤ 1.50
8 - 11 GHz
≤ 1.90

TNC 50 Ω	H+S type Item no.	43_TNC-50-0-1/133_NE 22640651

2 jacks (female)
1 plug (male)
Packaging single

Material: brass/SUCO*

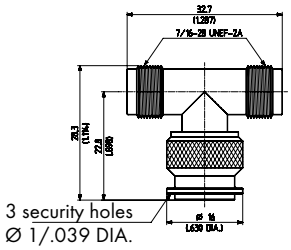

TNC 50 Ω	H+S type Item no.	34_TNC-50-0-4/133_NE 22658794

jack/jack (f)

Packaging single

Material: brass/SUCO*
Mounting hole ML 4

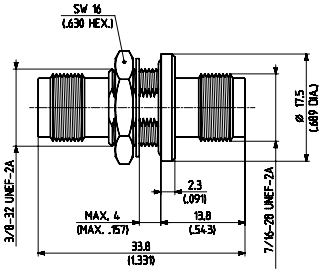

VSWR DC - 8 GHz
≤ 1.07 + 0.01 f

TNC 50 Ω	H+S type Item no.	46_TNC-50-0-1/133_NE 22640655

3 jacks (female)

Packaging single

Material: brass/SUCO*

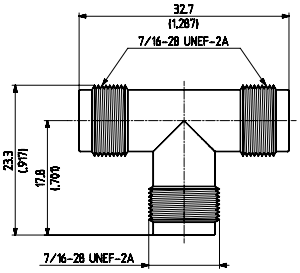

Adapt.

Material and plating descriptions may refer to the connector housing or outer contact.

SUCO* = SUCOPLATE®

TNC 50 Ω	H+S type Item no.	53_TNC-50-0-1/133_NE 22640659

plug/jack (m/f)

Packaging single

Material: brass/SUCO*

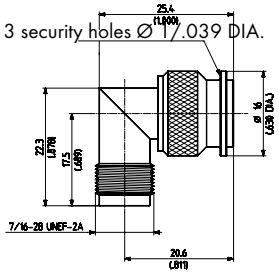

VSWR	DC - 5 GHz ≤ 1.03 + 0.11 f	5 - 11 GHz ≤ 1.58

TNC 50 Ω	H+S type Item no.	53_TNC-50-0-1/133_UH 22646963

plug/jack (m/f)

Packaging bulk 100 pcs.

Material: brass/SUCO*

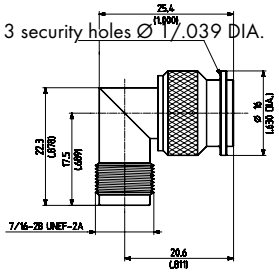

VSWR	DC - 5 GHz ≤ 1.03 + 0.11 f	5 - 11 GHz ≤ 1.58

N 50 Ω	H+S type Item no.	31_N-50-0-2/133_NE 22542382

jack/jack (f)

Packaging single

Material: brass/SUCO*

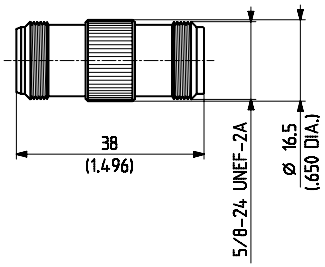

VSWR DC - 12.4 GHz
≤ 1.17 + 0.15 f

N 50 Ω	H+S type Item no.	31_N-50-0-51/199_NE 22652112

jack/jack (f)

Packaging single

Material: stainless steel

Note Precision adapter

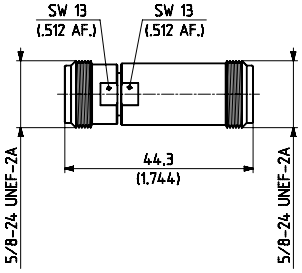

VSWR DC - 18 GHz
≤ 1.03 + 0.01 f

N 50 Ω	H+S type Item no.	32_N-50-0-1/133_NE 22542398

plug/plug (m)

Packaging single

Material: brass/SUCO*

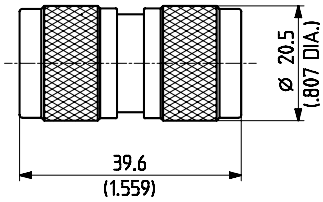

VSWR	DC - 9 GHz ≤ 1.06 + 0.04 f	9 - 12 GHz ≤ 1.40

N 50 Ω	H+S type Item no.	32_N-50-0-51/193_NE 22652113

plug/plug (m)

Packaging single

Material: stainless steel

Note Precision adapter

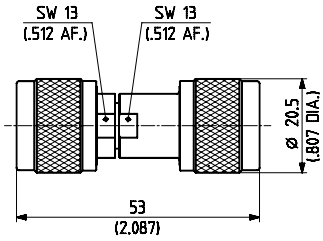

VSWR DC - 18 GHz
≤ 1.03 + 0.01 f

N 50 Ω	H+S type Item no.	33_N-50-0-7/133_NE 23014355

plug/jack(m/f)

Packaging single

Material: brass/SUCO*

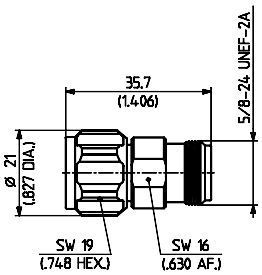

VSWR DC - 18 GHz
≤ 1.03 + 0.05 f

N 50 Ω	H+S type Item no.	33_N-50-0-51/193_NE 22652114

plug/jack(m/f)

Packaging single

Material: stainless steel

Note Precision adapter

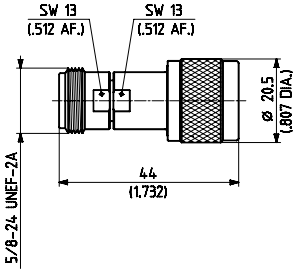

VSWR DC - 18 GHz
≤ 1.03 + 0.01 f

Material and plating descriptions may refer to the connector housing or outer contact. SUCO* = SUCOPLATE®

N 50 Ω	H+S type Item no.	33_N-50-0-52/199_UE 22648921
plug/jack(m/f)	quick connect (male side)	
Packaging	single	
Material:	stainless steel	
Note	Precision adapter	
VSWR	DC - 18 GHz ≤ 1.03 + 0.01 f	

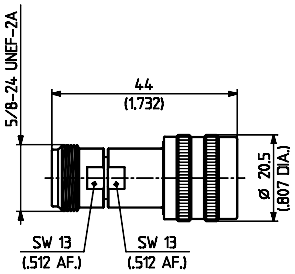

N 50 Ω	H+S type Item no.	34_N-50-0-51/193_NE 22544593
jack/jack (f)		
Packaging	single	
Material: Mounting hole	stainless steel ML 12	
Note	Precision adapter	
VSWR	DC - 18 GHz ≤ 1.03 + 0.01 f	

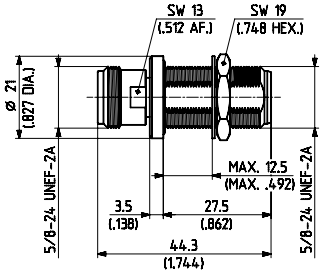

N 50 Ω	H+S type Item no.	34_N-50-0-1/133_NE 22542435
jack/jack (f)		
Packaging	single	
Material: Mounting hole	brass/SUCO* ML 12	
VSWR	DC - 2 GHz ≤ 1.06	2 - 12.4 GHz ≤ 1.06 + 0.17 f

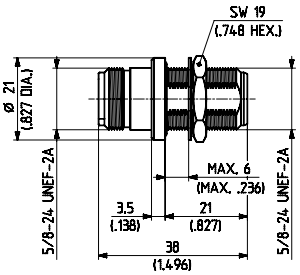

N 50 Ω	H+S type Item no.	37_N-50-0-1/133_NE 22542437
jack/jack (f)		
Packaging	single	
Material: Mounting hole	brass/SUCO* ML 14	
VSWR	DC - 12.4 GHz ≤ 1.19 + 0.06 f	

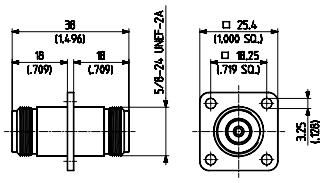

N 50 Ω	H+S type Item no.	34_N-50-0-1/133_UE 22651817
jack/jack (f)		
Packaging	single	
Material: Mounting hole	brass/SUCO* ML 12	
VSWR	DC - 2 GHz ≤ 1.06	2 - 12.4 GHz ≤ 1.06 + 0.17 f

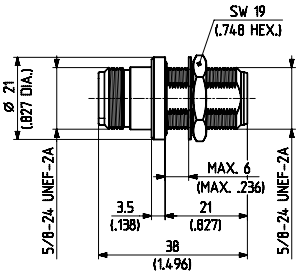

N 50 Ω	H+S type Item no.	43_N-50-0-1/133_NE 22542442
2 jacks (female) 1 plug (male) Packaging	single	
Material:	brass/SUCO*	

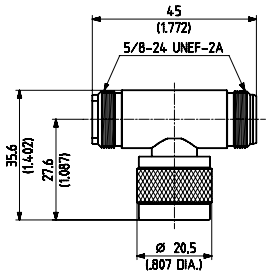

N 50 Ω	H+S type Item no.	34_N-50-0-3/133_NE 22642946
jack/jack (f)	hermet.sealed	
Packaging	single	
Material: Mounting hole Leak rate RoHS compliant alternative on request	brass/SUCO* ML 12 10^{-6} Torr 1/sec. (atm cc/s)	
VSWR	DC - 12.4 GHz ≤ 1.08 + 0.13 f	

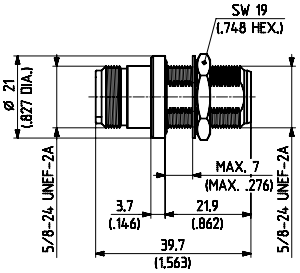

N 50 Ω	H+S type Item no.	46_N-50-0-1/133_NE 22542445
3 jacks (female)		
Packaging	single	
Material:	brass/SUCO*	

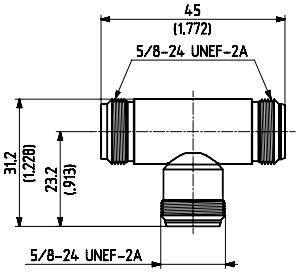

Adapt.

Material and plating descriptions may refer to the connector housing or outer contact.

SUCO* = SUCOPLATE®

N 50 Ω	H+S type Item no.	46_N-50-0-1/133_UE 22658682

3 jacks (female)

Packaging single

Material: brass/SUCO*

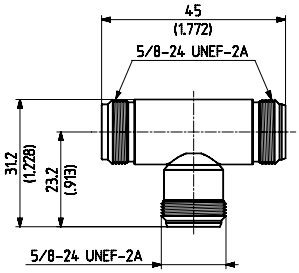

N 75 Ω	H+S type Item no.	32_N-75-0-1/133_NE 22542618

plug/plug (m)

Packaging single

Material: brass/SUCO*

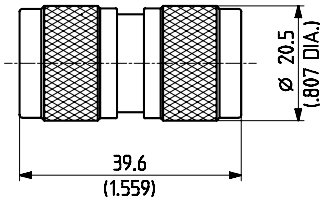

N 50 Ω	H+S type Item no.	53_N-50-0-4/133_NE 22651447

plug/jack (m/f)

Packaging single

Material: brass/SUCO*

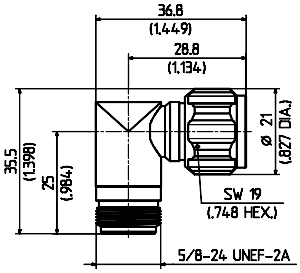

N 75 Ω	H+S type Item no.	34_N-75-0-1/133_NE 22542631

jack/jack (f)

Packaging single

Material: brass/SUCO*
Mounting hole ML 12

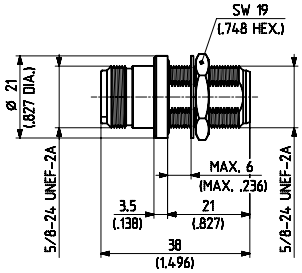

N 50 Ω	H+S type Item no.	53_N-50-0-4/133_UE 22658908

plug/jack (m/f)

Packaging single

Material: brass/SUCO*

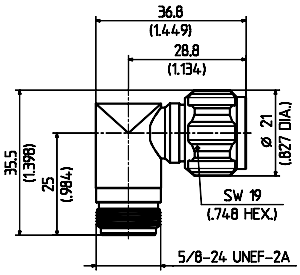

N 75 Ω	H+S type Item no.	37_N-75-0-1/133_NE 22542633

jack/jack (f)

Packaging single

Material: brass/SUCO*
Mounting hole ML 14

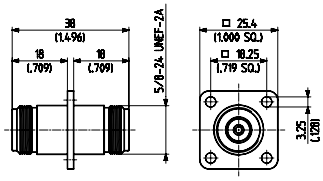

N 75 Ω	H+S type Item no.	31_N-75-0-2/133_NE 22542612

jack/jack (f)

Packaging single

Material: brass/SUCO*

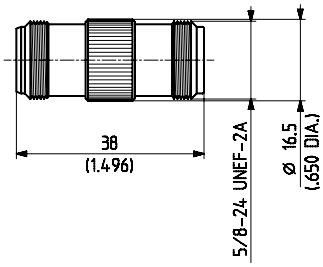

N 75 Ω	H+S type Item no.	53_N-75-0-4/133_NE 22651799

plug/jack (m/f)

Packaging single

Material: brass/SUCO*

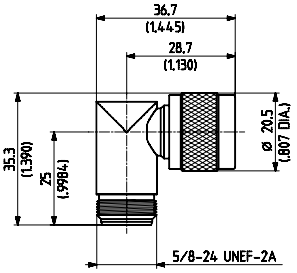

Material and plating descriptions may refer to the connector housing or outer contact.

SUCO* = SUCOPLATE®

7/16	H+S type Item no.	31_716-50-0-1/003_-E 22544117

jack/jack (f)

Packaging single

Material: brass/SUCO*

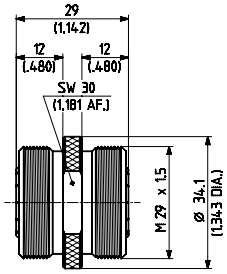

VSWR	DC - 3 GHz	3 - 7.5 GHz
	≤ 1.03	≤ 1.03 + 0.01 f

7/16	H+S type Item no.	32_716-50-0-1/003_-E 22544118

plug/plug (m)

Packaging single

Material: brass/silver

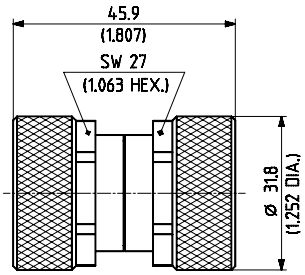

VSWR	DC - 2 GHz	2 - 4 GHz	4 - 6 GHz
	≤ 1.02	≤ 1.03	≤ 1.04

7/16	H+S type Item no.	33_716-50-0-1/003_-E 22651577

plug/jack (m/f)

Packaging single

Material: brass/silver

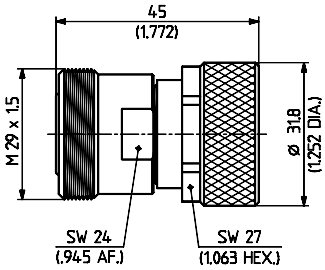

VSWR	DC - 2 GHz	2 - 4 GHz	4 - 6 GHz
	≤ 1.02	≤ 1.03	≤ 1.04

7/16	H+S type Item no.	34_716-50-0-1/003_-E 22544120

jack/jack (f)

Packaging single

Material: brass/SUCO*
Mounting hole ML 29

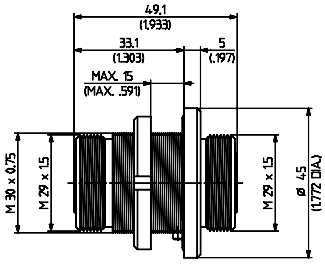

VSWR	DC - 4 GHz	4 - 7.5 GHz
	≤ 1.02 + 0.05 f	≤ 1.22

7/16	H+S type Item no.	34_716-50-0-2/003_-E 22652004

jack/jack (f)

Packaging single

Material: brass/SUCO*
Mounting hole ML 29

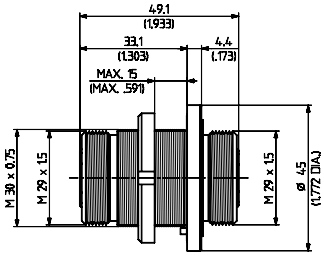

VSWR	2 GHz	4 GHz	6 GHz	7.5 GHz
	> 1.10	> 1.15	> 1.25	> 1.30

7/16	H+S type Item no.	37_716-50-0-1/003_-E 22544122

jack/jack (f)

Packaging single

Material: brass/SUCO*
Mounting hole ML 28

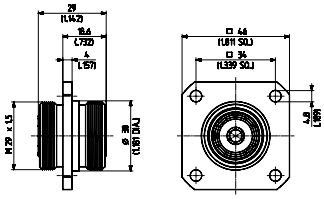

VSWR	DC - 3 GHz	3 - 7.5 GHz
	> 1.03	> 1.03 + 0.001f

7/16	H+S type Item no.	43_716-50-0-1/003_NE 22544572

2 jacks (female)
1 plug (male)
Packaging single

Material: brass/SUCO*

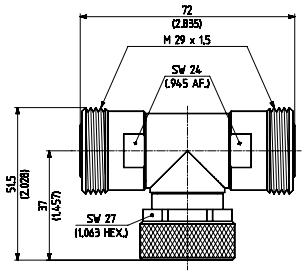

7/16	H+S type Item no.	46_716-50-0-1/003_NE 22643266

3 jacks (female)

Packaging single

Material: brass/SUCO*

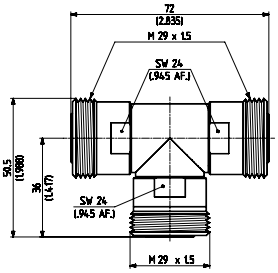

Adapt.

Material and plating descriptions may refer to the connector housing or outer contact.

SUCO* = SUCOPLATE®

7/16	H+S type Item no.	53_716-50-0-1/003_NE 22641259

plug/jack (m/f)

Packaging single

Material: brass/SUCO*

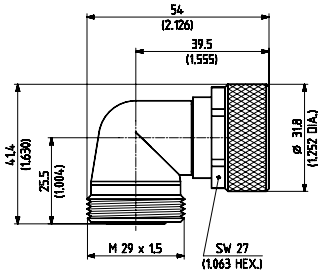

VSWR DC - 7.5 GHz
≤ 1.02 + 0.025 f

Material and plating descriptions may refer to the connector housing or outer contact. SUCO* = SUCOPLATE®

ADAPTORS BETWEEN SERIES

HUBER+SUHNER is manufacturing a wide range of adaptors between series. Please find hereafter a selection of them.

If the requested type is not mentioned, please do not hesitate to contact the Sales Department of our Subsidiary or Agent in your country.

ADAPTORS "BETWEEN SERIES"

		BMA		BNC		MCX		MMBX		MMCX		N		PC3.5	
		plug	jack	plug	jack	plug	jack	plug	jack	plug	jack	plug	jack	plug	jack
BMA	plug														
	jack														
BNC	plug					16	17/18			10/14	11/12	24/25	26/27		
	jack					19/20	15/21			13	9	28/29	22/23 30		
MCX	plug			16	19/20							65	66		
	jack			17/18	15/21							67/68	63/64/69		
MMBX	plug														
	jack														
MMCX	plug			10/14	13										
	jack			11/12	9										
N	plug			24/25	28/29	65	67/68								
	jack			26/27	22/23 30	66	63/64 69								
PC3.5	plug														
	jack														
QLA	plug				32										
	jack			31	33							75			
QMA	plug														
	jack														
QN	plug											77	106		107
	jack												76		
SMA	plug	2/6	4	35	37	71	73	55	57	60	62	79	81/84		
	jack	3/7	1/5/8	36	34/38	72	70	56	54	61	59	80	78/82/83		
SMB	plug			40	42							86	88		
	jack			41	39/43							87	85/89/90		
SMC	plug			45	47							92	94		
	jack			46	44							93	91/95		
TNC	plug			49	51/52							97	99/100		
	jack			50	48/53		74		58			98	96		
7/16	plug											102	104		
	jack											103	101/105		

FINDING THE RIGHT ADAPTOR

In the tables on this spread you find the most frequently used HUBER+SUHNER adaptors.

Note:
The VSWR values stated for the "Between Series" Adaptors on the next pages are typical values!

Example:
Adaptor BNC plug - N jack

		N	
		plug	jack
BNC	plug	24/25	26/27/
	jack	28/29	30/22/23

Material and plating descriptions may refer to the connector housing or outer contact.

SUCO* = SUCOPLATE®
SUPR** = SUCOPRO

		QLA		QMA		QN		SMA		SMB		SMC		TNC		7/16	
		plug	jack	plug	jack	plug	jack	plug	jack	plug	jack	plug	jack	plug	jack	plug	jack
BMA	plug							2/6	3/7								
	jack							4	1/5/8								
BNC	plug		31					35	36	40	41	45	46	49	50		
	jack	32	33					37	34/38	42	39/43	47	44	51/52	48/53		
MCX	plug							71	72								
	jack							73	70						74		
MMBX	plug							55	56								
	jack							57	54						58		
MMCX	plug							60	61								
	jack							62	59								
N	plug		75			77		79	80	86	87	92	93	97	98	102	103
	jack					106	76	81/84	78/82 83	88	85/89 90	94	91/95	99 100	96	104	101 105
PC3.5	plug																
	jack					107											
QLA	plug																
	jack																
QMA	plug								108/109								
	jack							110									
QN	plug																
	jack																
SMA	plug										112			115	116		
	jack									113	111			117	114		
SMB	plug								113						118		
	jack							112	111								
SMC	plug																
	jack																
TNC	plug								117/119								
	jack							116		118							
7/16	plug																
	jack																

Number 26 indicates where to look for the required type. On the following pages you will find the sketches and descriptions of all types in numeric order. If you go to number 26 you find the following information:

26	**H+S type** **Item No.**	**33_BNC-N-50-1/133_NE** **22540608**
BNC **N**	**plug (m)** **jack (f)**	
Packaging	single	
Material: BNC N	 brass/SUCO* brass/SUCO*	

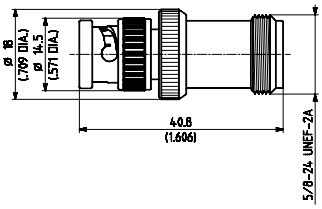

Material and plating descriptions may refer to the connector housing or outer contact.

SUCO* = SUCOPLATE®
SUPR** = SUCOPRO

1

	H+S type	**31_BMA-SMA-50-1/1-9_UE**
	Item no.	**22645642**
BMA	**jack (f)**	
SMA	**jack (f)**	
Packaging	single	
Material		
BMA	stainless steel	
SMA	stainless steel	
VSWR:	DC - 9 GHz: ≤ 1.04 + 0.02f	

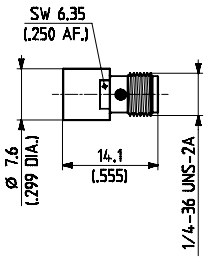

2

	H+S type	**32_BMA-SMA-50-1/199_UE**
	Item no.	**22645643**
BMA	**plug (m)**	
SMA	**plug (m)**	
Packaging	single	
Material		
BMA	stainless steel	
SMA	stainless steel	
VSWR:	DC - 9 GHz: ≤ 1.067 + 0.017f 9 - 18 GHz: ≤ 1.22	

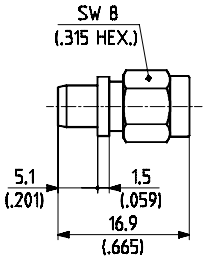

3

	H+S type	**33_BMA-SMA-50-1/199_UE**
	Item no.	**22645644**
BMA	**plug (m)**	
SMA	**jack (f)**	
Packaging	single	
Material		
BMA	stainless steel	
SMA	stainless steel	
VSWR:	DC - 18 GHz: ≤ 1.06 + 0.009f	

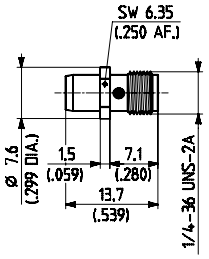

4

	H+S type	**33_SMA-BMA-50-1/1-9_UE**
	Item no.	**22645645**
SMA	**plug (m)**	
BMA	**jack (f)**	
Packaging	single	
Material		
SMA	stainless steel	
BMA	stainless steel	
VSWR:	DC - 18 GHz: ≤ 1.06 + 0.009f	

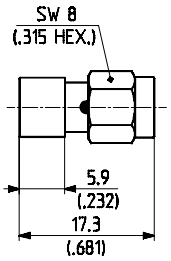

5

	H+S type	**34_BMA-SMA-50-2/1-_UE**
	Item no.	**22645650**
BMA	**jack (f)**	
SMA	**jack (f)**	
Packaging	single	
Material		
BMA	stainless steel	
SMA	stainless steel	
Mounting hole	ML 56	
VSWR:	DC - 18 GHz: ≤ 1.05 + 0.005f	

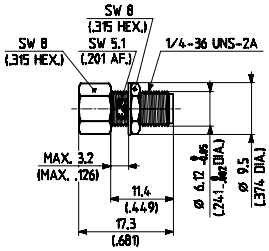

6

	H+S type	**35_BMA-SMA-50-1/193_UE**
	Item no.	**22645647**
BMA	**plug (m)**	
SMA	**plug (m)**	
Packaging	single	
Material		
BMA	stainless steel	
SMA	stainless steel	
Mounting hole	ML 56	
VSWR:	DC - 18 GHz: ≤ 1.05 + 0.005f	

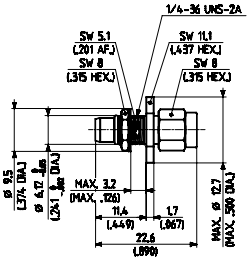

7

	H+S type	**36_BMA-SMA-50-1/199_UE**
	Item no.	**22645651**
BMA	**plug (m)**	
SMA	**jack (f)**	
Packaging	single	
Material		
BMA	stainless steel	
SMA	stainless steel	
Mounting hole	ML 56	
VSWR:	DC - 18 GHz: ≤ 1.03 + 0.015f	

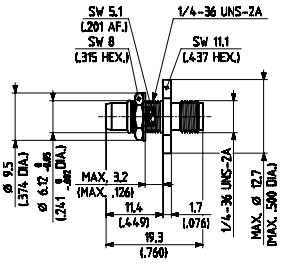

8

	H+S type	**37_BMA-SMA-50-1/1-_UE**
	Item no.	**22645649**
BMA	**jack (f)**	
SMA	**jack (f)**	
Packaging	single	
Material		
BMA	stainless steel	
SMA	stainless steel	
Mounting Hole	ML 58	
VSWR:	DC - 9 GHz: ≤ 1.07 + 0.017f 9 - 18 GHz: ≤ 1.22	

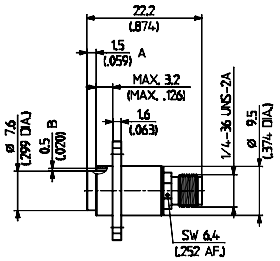

Material and plating descriptions may refer to the connector housing or outer contact.

SUCO* = SUCOPLATE®
SUPR** = SUCOPRO

9

	H+S type	**31_BNC-MMCX-50-1/1-_UE**
	Item no.	**22645963**
BNC	**jack (f)**	
MMCX	**jack (f)**	
Packaging	single	
Material		
BNC	brass/SUCO*	
MMCX	brass/gold	
VSWR:	DC - 4 GHz: ≤ 1.05 + 0.04f	

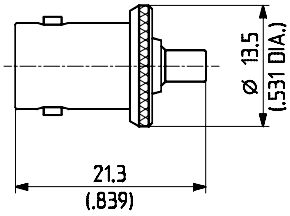

10

	H+S type	**32_BNC-MMCX-50-1/1-_UE**
	Item no.	**22645959**
BNC	**plug (m)**	
MMCX	**plug (m)**	
Packaging	single	
Material		
BNC	brass/SUCO*	
MMCX	brass/gold	
VSWR:	DC - 4 GHz: ≤ 1.03 + 0.05f	

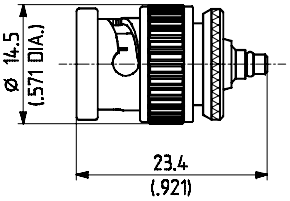

11

	H+S type	**33_BNC-MMCX-50-1/1-_NE**
	Item no.	**22652907**
BNC	**plug (m)**	
MMCX	**jack (f)**	
Packaging	single	
Material		
BNC	brass/SUCO*	
MMCX	brass/gold	
VSWR:	DC - 4 GHz: ≤ 1.03 + 0.05f	

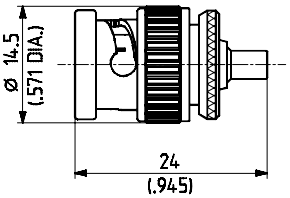

12

	H+S type	**33_BNC-MMCX-50-1/1-_UE**
	Item no.	**22645964**
BNC	**plug (m)**	
MMCX	**jack (f)**	
Packaging	single	
Material		
BNC	brass/SUCO*	
MMCX	brass/SUCO*	
VSWR:	DC - 4 GHz: ≤ 1.05 + 0.025 f	

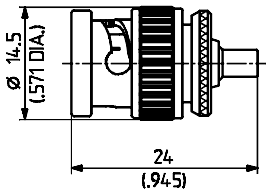

13

	H+S type	**33_MMCX-BNC-50-1/111_UE**
	Item no.	**22645966**
MMCX	**plug (m)**	
BNC	**jack (f)**	
Packaging	single	
Material		
MMCX	brass/gold	
BNC	brass/SUCO*	
VSWR:	DC - 4 GHz: ≤ 1.05 + 0.04f	

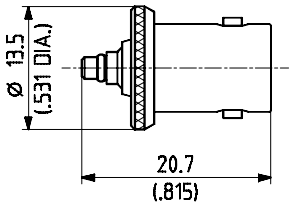

14

	H+S type	**35_BNC-MMCX-50-2/1-_NE**
	Item no.	**23005885**
BNC	**plug (m)**	
MMCX	**plug (m)**	
Packaging	single	
Material		
BNC	brass/SUCO*	
MMCX	brass/gold	
Mounting hole	ML 2	
VSWR:	DC - 1 GHz: ≤ 1.03; 1 - 3 GHz: ≤ 0.935 + 0.095 f; 3 - 4 GHz: ≤ 1.22	

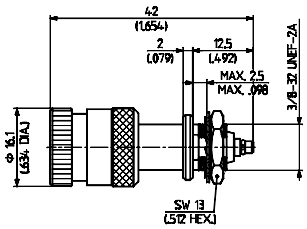

15

	H+S type	**31_BNC-MCX-50-1/1-_UE**
	Item no.	**22543639**
BNC	**jack (f)**	
MCX	**jack (f)**	
Packaging	single	
Material		
BNC	brass/SUCO*	
MCX	brass/gold	
VSWR:	DC - 2 GHz: ≤ 1.03 + 0.13f 2 - 4 GHz: ≤ 1.29	

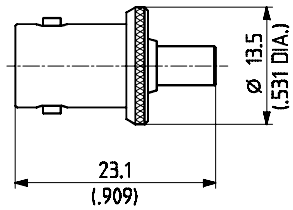

16

	H+S type	**32_BNC-MCX-50-1/1-_UE**
	Item no.	**22543567**
BNC	**plug (m)**	
MCX	**plug (m)**	
Packaging	single	
Material		
BNC	brass/SUCO*	
MCX	CuBe/gold	
VSWR:	DC - 2 GHz: ≤ 1.04 + 0.09f 2 - 4 GHz: ≤ 1.22	

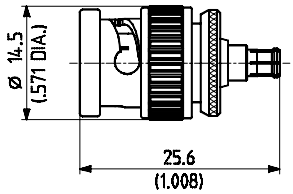

Material and plating descriptions may refer to the connector housing or outer contact.

SUCO* = SUCOPLATE®
SUPR** = SUCOPRO

17

H+S type		**33_BNC-MCX-50-1/1-_UE**
Item no.		**22543829**
BNC	**plug (m)**	
MCX	**jack (f)**	
Packaging	single	
Material:		
BNC	brass/SUCO*	
MCX	brass/gold	
VSWR:	DC - 4 GHz: ≤ 1.20	

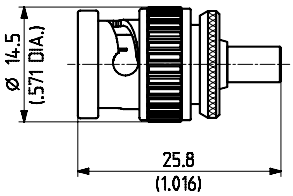

18

H+S type		**33_BNC-MCX-75-1/1-_NE**
Item no.		**22649213**
BNC	**plug (m)**	
MCX	**jack (f)**	
Packaging	single	
Material:		
BNC	brass/SUCO*	
MCX	brass/gold	

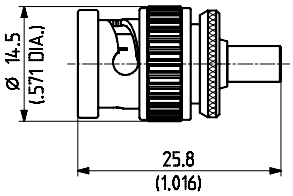

19

H+S type		**33_MCX-BNC-50-1/1-_UE**
Item no.		**22543585**
MCX	**plug (m)**	
BNC	**jack (f)**	
Packaging	single	
Material:		
MCX	CuBe/gold	
BNC	brass/SUCO*	
VSWR:	DC - 1 GHz: ≤ 1.04; 1 - 4 GHz: ≤ 1.22	

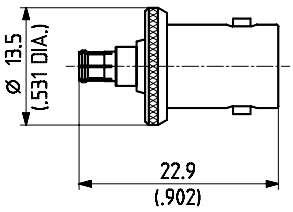

20

H+S type		**33_MCX-BNC-75-1/1-_NE**
Item no.		**22649211**
MCX	**plug (m)**	
BNC	**jack (f)**	
Packaging	single	
Material:		
MCX	CuBe/gold	
BNC	brass/SUCO*	

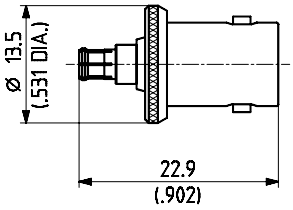

21

H+S type		**34_BNC-MCX-50-2/133_UE**
Item no.		**22644912**
BNC	**jack (f)**	
MCX	**jack (f)**	
Packaging	single	
Material:		
BNC	brass/SUCO*	
MCX	brass/SUCO*	
Mounting hole	ML 2	
VSWR:	DC - 4 GHz: ≤ 1.03 + 0.04f	

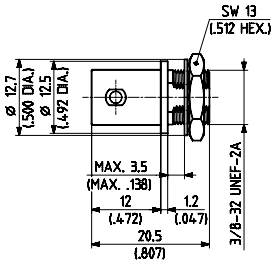

22

H+S type		**31_BNC-N-50-1/133_UE**
Item no.		**22540549**
BNC	**jack (f)**	
N	**jack (f)**	
Packaging	single	
Material:		
BNC	brass/SUCO*	
N	brass/SUCO*	
VSWR:	DC - 4 GHz: ≤ 1.22	

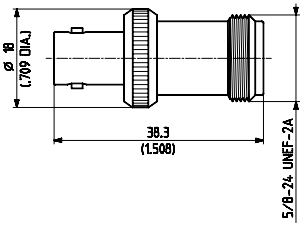

23

H+S type		**31_BNC-N-75-1/133_UE**
Item no.		**22543640**
BNC	**jack (f)**	
N	**jack (f)**	
Packaging	single	
Material:		
BNC	brass/SUCO*	
N	brass/SUCO*	

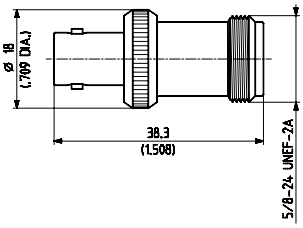

24

H+S type		**32_BNC-N-50-1/133_UE**
Item no.		**22540571**
BNC	**plug (m)**	
N	**plug (m)**	
Packaging	single	
Material:		
BNC	brass/SUCO*	
N	brass/SUCO*	
VSWR:	DC - 4 GHz: ≤ 1.06 + 0.4f	

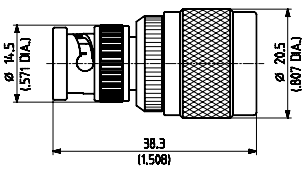

Material and plating descriptions may refer to the connector housing or outer contact.

SUCO* = SUCOPLATE®
SUPR** = SUCOPRO

25

25	**H+S type** **Item no.**	**32_BNC-N-75-1/133_UE** **22541022**

BNC	**plug (m)**
N	**plug (m)**
Packaging	single
Material:	
BNC	brass/SUCO*
N	brass/SUCO*

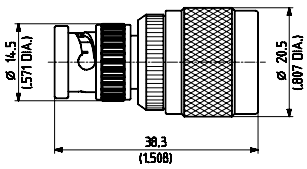

29

29	**H+S type** **Item no.**	**33_N-BNC-75-1/133_UE** **22542622**

N	**plug (m)**
BNC	**jack (f)**
Packaging	single
Material:	
N	brass/SUCO*
BNC	brass/SUCO*

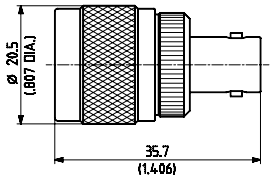

26

26	**H+S type** **Item no.**	**33_BNC-N-50-1/133_NE** **22540608**

BNC	**plug (m)**
N	**jack (f)**
Packaging	single
Material:	
BNC	brass/SUCO*
N	brass/SUCO*

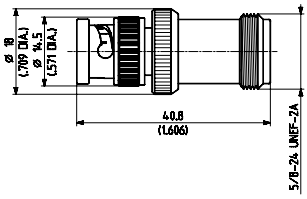

VSWR: DC - 4 GHz: ≤ 1.04 + 0.025f

30

30	**H+S type** **Item no.**	**34_BNC-N-50-1/133_UE** **22651055**

BNC	**jack (f)**
N	**jack (f)**
Packaging	single
Material:	
BNC	brass/SUCO*
N	brass/SUCO*
Mounting hole	ML 12

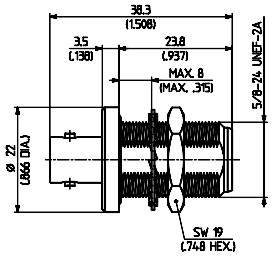

VSWR: DC - 4 GHz: ≤ 1.22

27

27	**H+S type** **Item no.**	**33_BNC-N-75-1/133_UE** **22541034**

BNC	**plug (m)**
N	**jack (f)**
Packaging	single
Material:	
BNC	brass/SUCO*
N	brass/SUCO*

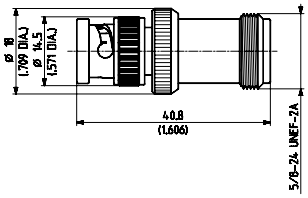

31

31	**H+S type** **Item no.**	**33_BNC-QLA-01-1/1-_NE** **22540624**

BNC	**plug (m)**
QLA 00	**jack (f)**
Packaging	single
Material:	
BNC	brass/nickel
QLA 00	brass/nickel

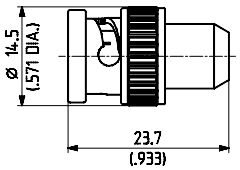

28

28	**H+S type** **Item no.**	**33_N-BNC-50-1/133_UE** **22542414**

N	**plug (m)**
BNC	**jack (f)**
Packaging	single
Material:	
N	brass/SUCO*
BNC	brass/SUCO*

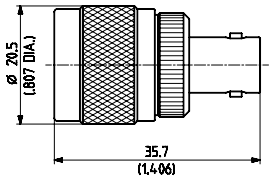

VSWR: DC - 4 GHz: ≤ 1.22

32

32	**H+S type** **Item no.**	**33_QLA-BNC-01-1/1-_NE** **22640029**

QLA 00	**plug (m)**
BNC	**jack (f)**
Packaging	single
Material:	
QLA 00	brass/nickel
BNC	brass/SUCO*

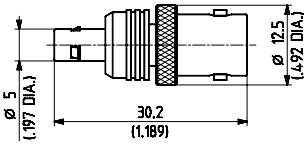

Material and plating descriptions may refer to the connector housing or outer contact.

SUCO* = SUCOPLATE®
SUPR** = SUCOPRO

33

H+S type		**34_BNC-QLA-01-1/1-_UE**
Item no.		**22640971**
BNC	**jack (f)**	
QLA 00	**jack (f)**	
Packaging	single	
Material:		
BNC	brass/SUCO*	
QLA 00	brass/SUCO*	
Mounting hole	ML 2	

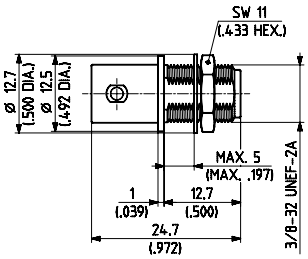

34

H+S type		**31_BNC-SMA-50-1/1-_UE**
Item no.		**22540551**
BNC	**jack (f)**	
SMA	**jack (f)**	
Packaging	single	
Material:		
BNC	brass/SUCO*	
SMA	CuBe/gold	
VSWR:	DC - 4 GHz: ≤ 1.06 - 0.04f	

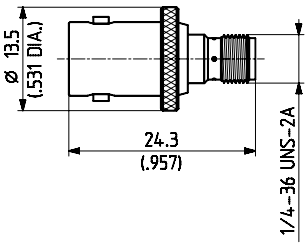

35

H+S type		**32_BNC-SMA-50-1/1-_UE**
Item no.		**22540572**
BNC	**plug (m)**	
SMA	**plug (m)**	
Packaging	single	
Material:		
BNC	brass/SUCO*	
SMA	CuBe/gold	
VSWR:	DC - 4 GHz: ≤ 1.03 + 0.03f	

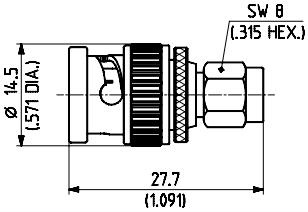

36

H+S type		**33_BNC-SMA-50-1/1-_UE**
Item no.		**22540610**
BNC	**plug (m)**	
SMA	**jack (f)**	
Packaging	single	
Material:		
BNC	brass/SUCO*	
SMA	CuBe/gold	
VSWR:	DC - 4 GHz: ≤ 1.03 + 0.03f	

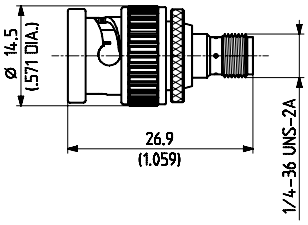

37

H+S type		**33_SMA-BNC-50-1/1-_NE**
Item no.		**22640153**
SMA	**plug (m)**	
BNC	**jack (f)**	
Packaging	single	
Material:		
SMA	CuBe/gold	
BNC	brass/SUCO*	
VSWR:	DC - 4 GHz: ≤ 1.05 + 0.037f	

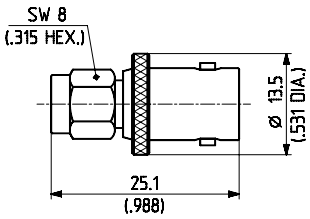

38

H+S type		**34_BNC-SMA-50-2/1-_UE**
Item no.		**22640153**
BNC	**jack (f)**	
SMA	**jack (f)**	
Packaging	single	
Material:		
BNC	brass/SUCO*	
SMA	CuBe/gold	
Mounting hole	ML 4	
VSWR:	DC - 4 GHz: ≤ 1.06 + 0.03f	

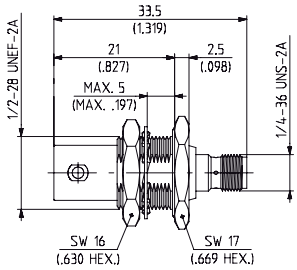

39

H+S type		**31_BNC-SMB-50-2/1-_UE**
Item no.		**22540553**
BNC	**jack (f)**	
SMB	**jack (f)**	
Packaging	single	
Material:		
BNC	brass/SUCO*	
SMB	brass/gold	
VSWR:	DC - 2 GHz: ≤ 1.03 + 0.095f 2 - 4 GHz: ≤ 1.22	

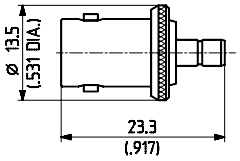

40

H+S type		**32_BNC-SMB-50-2/1-_UE**
Item no.		**22540574**
BNC	**plug (m)**	
SMB	**plug (m)**	
Packaging	single	
Material:		
BNC	brass/SUCO*	
SMB	brass/gold	
VSWR:	DC - 4 GHz: ≤ 1.12	

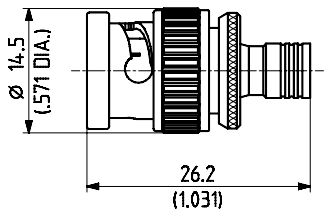

Material and plating descriptions may refer to the connector housing or outer contact.

SUCO* = SUCOPLATE®
SUPR** = SUCOPRO

41

	H+S type	**33_BNC-SMB-50-2/1–_UE**
	Item no.	**22540612**
BNC	**plug (m)**	
SMB	**jack (f)**	
Packaging	single	
Material:		
BNC	brass/SUCO*	
SMB	brass/gold	
VSWR:	DC - 4 GHz: ≤ 1.06 + 0.04f	

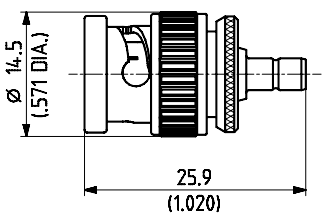

42

	H+S type	**33_SMB-BNC-50-2/1–_UE**
	Item no.	**22640396**
SMB	**plug (m)**	
BNC	**jack (f)**	
Packaging	single	
Material:		
SMB	brass/gold	
BNC	brass/SUCO*	
VSWR:	DC - 4 GHz: ≤ 1.05 + 0.075f	

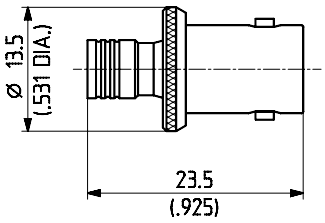

43

	H+S type	**34_BNC-SMB-50-1/133_NH**
	Item no.	**23001709**
BNC	**jack (f)**	
SMB	**jack (f)**	
Packaging	bulk 100 pcs.	
Material:		
BNC	brass/SUCO*	
SMB	brass/SUCO*	
Mounting hole	ML 4	
VSWR:	DC - 2 GHz: ≤ 1.065	
	2 - 4 GHz: ≤ 0.8 + 0.13f	

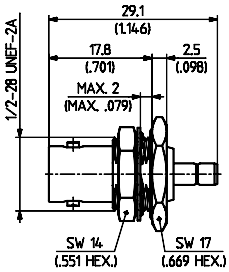

44

	H+S type	**31_BNC-SMC-50-2/1–_NE**
	Item no.	**22540555**
BNC	**jack (f)**	
SMC	**jack (f)**	
Packaging	single	
Material:		
BNC	brass/SUCO*	
SMC	brass/gold	
VSWR:	DC - 4 GHz: ≤ 1.22	

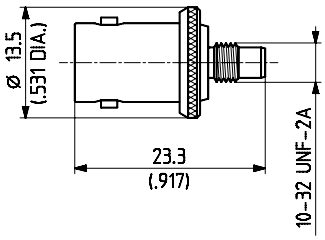

45

	H+S type	**32_BNC-SMC-50-2/1–_NE**
	Item no.	**22540576**
BNC	**plug (m)**	
SMC	**plug (m)**	
Packaging	single	
Material:		
BNC	brass/SUCO*	
SMC	brass/gold	
VSWR:	DC - 4 GHz: ≤ 1.15	

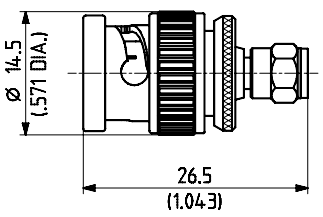

46

	H+S type	**33_BNC-SMC-50-2/1–_NE**
	Item no.	**22540616**
BNC	**plug (m)**	
SMC	**jack (f)**	
Packaging	single	
Material:		
BNC	brass/SUCO*	
SMC	brass/gold	
VSWR:	DC - 4 GHz: ≤ 1.22	

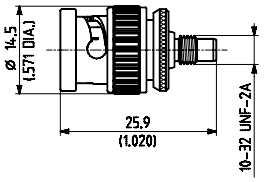

47

	H+S type	**33_SMC-BNC-50-2/1–_NE**
	Item no.	**22640405**
SMC	**plug (m)**	
BNC	**jack (f)**	
Packaging	single	
Material:		
SMC	brass/gold	
BNC	brass/SUCO*	
VSWR:	DC - 2 GHz: ≤ 1.03 + 0.095f	
	2 - 4 GHz: ≥ 1.22	

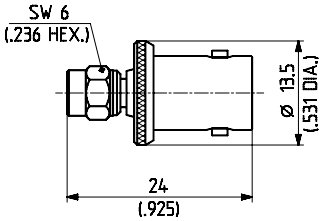

48

	H+S type	**31_BNC-TNC-50-1/133_UE**
	Item no.	**22540559**
BNC	**jack (f)**	
TNC	**jack (f)**	
Packaging	single	
Material:		
BNC	brass/SUCO*	
TNC	brass/SUCO*	
VSWR:	DC - 4 GHz: ≤ 1.22	

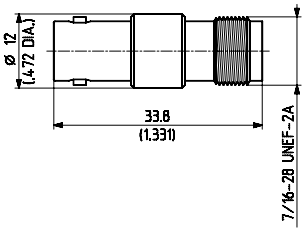

Material and plating descriptions may refer to the connector housing or outer contact.

SUCO* = SUCOPLATE®
SUPR** = SUCOPRO

49

	H+S type	**32_BNC-TNC-50-1/133_NE**
	Item no.	**22540582**
BNC	**plug (m)**	
TNC	**plug (m)**	
Packaging	single	
Material:		
BNC	brass/SUCO*	
TNC	brass/SUCO*	
VSWR:	DC - 4 GHz: ≤ 1.22	

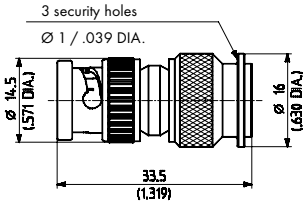

50

	H+S type	**33_BNC-TNC-50-1/133_NE**
	Item no.	**22540614**
BNC	**plug (m)**	
TNC	**jack (f)**	
Packaging	single	
Material:		
BNC	brass/SUCO*	
TNC	brass/SUCO*	
VSWR:	DC - 4 GHz: ≤ 1.22	

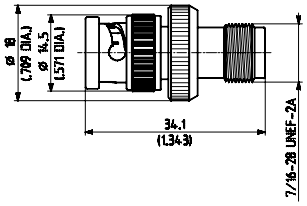

51

	H+S type	**33_TNC-BNC-50-1/133_NE**
	Item no.	**22640631**
TNC	**plug (m)**	
BNC	**jack (f)**	
Packaging	single	
Material:		
TNC	brass/SUCO*	
BNC	brass/SUCO*	
VSWR:	DC - 4 GHz: ≤ 1.22	

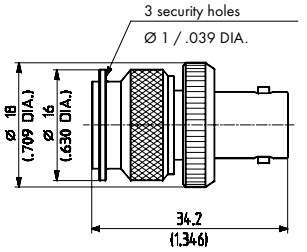

52

	H+S type	**33_TNC-BNC-75-1/133_UE**
	Item no.	**22640759**
TNC	**plug (m)**	
BNC	**jack (f)**	
Packaging	single	
Material:		
TNC	brass/SUCO*	
BNC	brass/SUCO*	

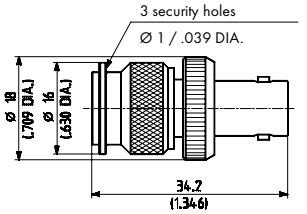

53

	H+S type	**37_BNC-TNC-50-1/133_UE**
	Item no.	**22540639**
BNC	**jack (f)**	
TNC	**jack (f)**	
Packaging	single	
Material:		
BNC	brass/SUCO*	
TNC	brass/SUCO*	
VSWR:	DC - 4 GHz: ≤ 1.22	

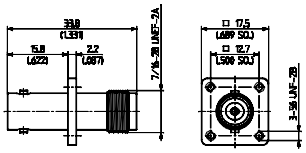

54

	H+S type	**31_MMBX-SMA-50-1/111_NE**
	Item no.	**23004933**
MMBX	**jack (f)**	
SMA	**jack (f)**	
Packaging	single	
Material:		
MMBX	brass/SUPR**	
SMA	CuBe/SUPR**	
VSWR:	DC - 2.5 GHz: ≤ 1.05; 2.5 - 6 GHz: ≤ 1.06 6 - 12.4 GHz: ≤ 1.35	

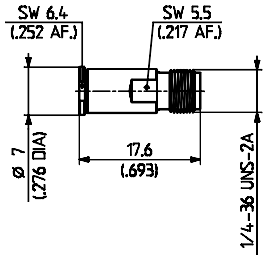

55

	H+S type	**32_MMBX-SMA-50-1/119_NE**
	Item no.	**23004934**
MMBX	**plug (m)**	
SMA	**plug (m)**	
Packaging	single	
Material:		
MMBX	CuBe/SUPR**	
SMA	CuBe/SUPR**	
VSWR:	DC - 2.5 GHz: ≤ 1.05; 2.5 - 6 GHz: ≤ 1.06 6 - 12.4 GHz: ≤ 1.35	

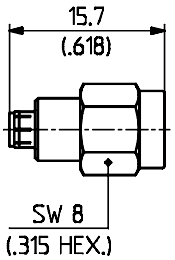

56

	H+S type	**33_MMBX-SMA-50-1/111_NE**
	Item no.	**23004937**
MMBX	**plug (m)**	
SMA	**jack (f)**	
Packaging	single	
Material:		
MMBX	CuBe/SUPR**	
SMA	CuBe/SUPR**	
VSWR:	DC - 2.5 GHz: ≤ 1.05; 2.5 - 6 GHz: ≤ 1.06 6 - 12.4 GHz: ≤ 1.35	

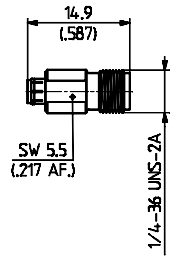

Material and plating descriptions may refer to the connector housing or outer contact.

SUCO* = SUCOPLATE®
SUPR** = SUCOPRO

57

	H+S type	**33_SMA-MMBX-50-1/119_NE**
	Item no.	**23004935**
SMA	**plug (m)**	
MMBX	**jack (f)**	
Packaging	single	
Material:		
SMA	CuBe/SUPR**	
MMBX	brass/SUPR**	
VSWR:	DC - 2.5 GHz: ≤ 1.05; 2.5 - 6 GHz: ≤ 1.06 6 - 12.4 GHz: ≤ 1.35	

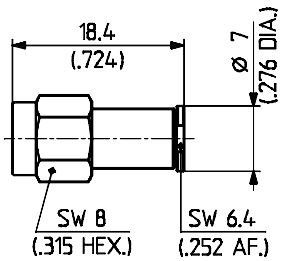

58

	H+S type	**34_MMBX-TNC-50-1/1-3_NE**
	Item no.	**23014297**
MMBX	**jack (f)**	
TNC	**jack (f)**	
Packaging	single	
Material:		
MMBX	brass/SUCO*	
TNC	brass/SUCO*	
VSWR:	DC - 5 GHz: ≤ 1.3	

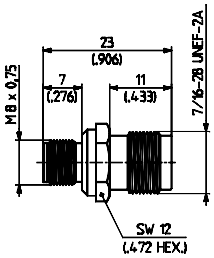

59

	H+S type	**31_MMCX-SMA-50-1/111_OE**
	Item no.	**22645961**
MMCX	**jack (f)**	
SMA	**jack (f)**	
Packaging	single	
Material:		
MMCX	brass/gold	
SMA	CuBe/gold	
VSWR:	DC - 2.5 GHz: ≤ 1.10 2.5 - 6 GHz: ≤ 1.18	

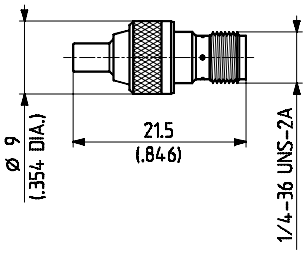

60

	H+S type	**32_MMCX-SMA-50-1/111_OE**
	Item no.	**22645967**
MMCX	**plug (m)**	
SMA	**plug (m)**	
Packaging	single	
Material:		
MMCX	brass/gold	
SMA	CuBe/gold	
VSWR:	DC - 2.5 GHz: ≤ 1.10 2.5 - 6 GHz: ≤ 1.18	

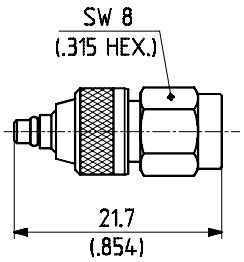

61

	H+S type	**33_MMCX-SMA-50-1/111_UE**
	Item no.	**22645970**
MMCX	**plug (m)**	
SMA	**jack (f)**	
Packaging	single	
Material:		
MMCX	brass/gold	
SMA	CuBe/gold	
VSWR:	DC - 2.5 GHz: ≤ 1.10 2.5 - 6 GHz: ≤ 1.18	

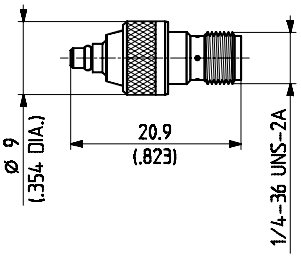

62

	H+S type	**33_SMA-MMCX-50-1/111_NE**
	Item no.	**22645969**
SMA	**plug (m)**	
MMCX	**jack (f)**	
Packaging	single	
Material:		
SMA	CuBe/gold	
MMCX	brass/gold	
VSWR:	DC - 2.5 GHz: ≤ 1.10 2.5 - 6 GHz: ≤ 1.18	

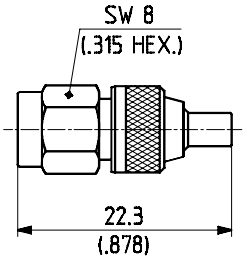

63

	H+S type	**31_MCX-N-50-1/1-_UE**
	Item no.	**22640172**
MCX	**jack (f)**	
N	**jack (f)**	
Packaging	single	
Material:		
MCX	brass/gold	
N	brass/SUCO*	
VSWR:	DC - 6 GHz: ≤ 1.03 + 0.05f	

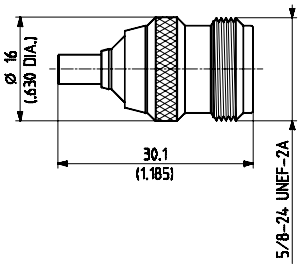

64

	H+S type	**31_MCX-N-75-10/133_NE**
	Item no.	**22651488**
MCX	**jack (f)**	
N	**jack (f)**	
Packaging	single	
Material:		
MCX	CuBe/SUCO*	
N	brass/SUCO*	
VSWR:	DC - 3 GHz: ≤ 1.07	

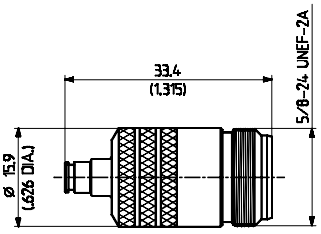

Material and plating descriptions may refer to the connector housing or outer contact.

SUCO* = SUCOPLATE®
SUPR** = SUCOPRO

65

	H+S type	**32_MCX-N-50-1/1-_UE**
	Item no.	**22543584**
MCX	**plug (m)**	
N	**plug (m)**	
Packaging	single	
Material:		
MCX	CuBe/gold	
N	brass/SUCO*	
VSWR:	DC - 6 GHz: ≤ 1.03 + 0.05f	

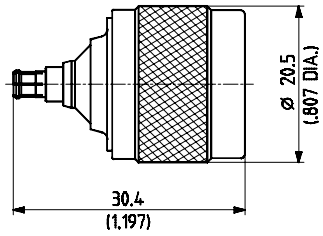

66

	H+S type	**33_MCX-N-50-1/1-_UE**
	Item no.	**22543586**
MCX	**plug (m)**	
N	**jack (f)**	
Packaging	single	
Material:		
MCX	CuBe/gold	
N	brass/SUCO*	
VSWR:	DC - 6 GHz: ≤ 1.03 + 0.035f	

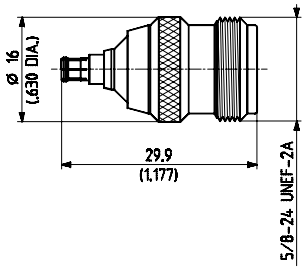

67

	H+S type	**33_N-MCX-50-1/1-_UE**
	Item no.	**22543796**
N	**plug (m)**	
MCX	**jack (f)**	
Packaging	single	
Material:		
N	brass/SUCO*	
MCX	brass/gold	
VSWR:	DC - 6 GHz: ≤ 1.03 + 0.03f	

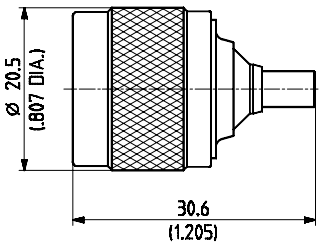

68

	H+S type	**33_N-MCX-75-1/1-_NE**
	Item no.	**22649214**
N	**plug (m)**	
MCX	**jack (f)**	
Packaging	single	
Material:		
N	brass/SUCO*	
MCX	brass/gold	

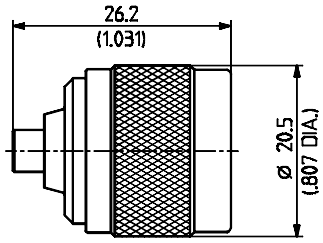

69

	H+S type	**34_MCX-N-50-1/133_UE**
	Item no.	**22646217**
MCX	**jack (f)**	
N	**jack (f)**	
Packaging	single	
Material:		
MCX	brass/SUCO*	
N	brass/SUCO*	
Mounting hole:	ML 4	
VSWR:	DC - 6 GHz: ≤ 1.03 + 0.03f	

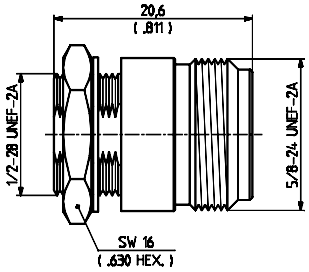

70

	H+S type	**31_MCX-SMA-50-1/111_NE**
	Item no.	**22645485**
MCX	**jack (f)**	
SMA	**jack (f)**	
Packaging	single	
Material:		
MCX	brass/gold	
SMA	CuBe/gold	
VSWR:	DC - 6 GHz: ≤ 1.03 - 0.03f	

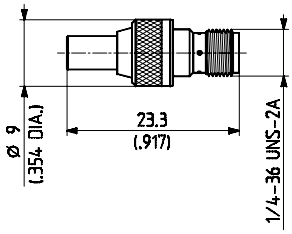

71

	H+S type	**32_MCX-SMA-50-1/111_NE**
	Item no.	**22645486**
MCX	**plug (m)**	
SMA	**plug (m)**	
Packaging	single	
Material:		
MCX	brass/gold	
SMA	CuBe/gold	
VSWR:	DC - 6 GHz: ≤ 1.03 + 0.03f	

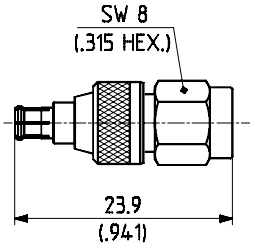

72

	H+S type	**33_MCX-SMA-50-1/111_UE**
	Item no.	**22645487**
MCX	**plug (m)**	
SMA	**jack (f)**	
Packaging	single	
Material:		
MCX	CuBe/gold	
SMA	CuBe/gold	
VSWR:	DC - 6 GHz: ≤ 1.03 + 0.03f	

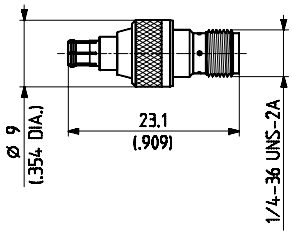

Material and plating descriptions may refer to the connector housing or outer contact.

SUCO* = SUCOPLATE®
SUPR** = SUCOPRO

73

H+S type	**33_SMA-MCX-50-1/111_NE**	
Item no.	**22645488**	
SMA	**plug (m)**	
MCX	**jack (f)**	
Packaging	single	
Material:		
SMA	CuBe/gold	
MCX	brass/gold	
VSWR:	DC - 6 GHz: ≤ 1.03 + 0.03f	

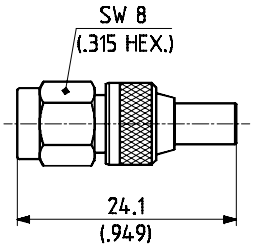

74

H+S type	**34_MCX-TNC-50-1/133_UE**	
Item no.	**22641905**	
MCX	**jack (f)**	
TNC	**jack (f)**	
Packaging	single	
Material:		
MCX	brass/SUCO*	
TNC	brass/SUCO*	
Mounting hole	ML 2	
VSWR:	DC - 6 GHz: ≤ 1.07 + 0.07f	

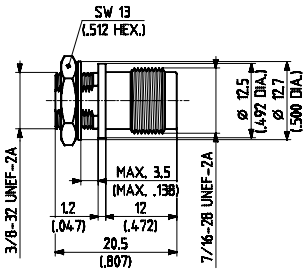

75

H+S type	**33_N-QLA-01-1/1-_NE**	
Item no.	**22542431**	
N	**plug (m)**	
QLA 00	**jack (f)**	
Packaging	single	
Material:		
N	brass/SUCO*	
QLA 00	brass/nickel	

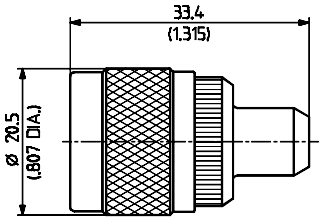

76

H+S type	**31_N-QN-50-1/133_NE**		
Item no.	**84016830**		
N	**jack (f)**		
QN	**jack (f)**		
Packaging	single		
Material:			
N	brass/SUCO*		
QN	brass/SUCO*		
VSWR:	DC - 2 GHz	2 - 6 GHz	6 - 11 GHz
	1.05	1.3	1.5

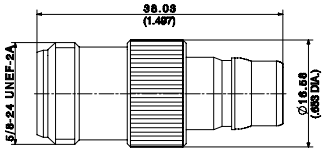

77

H+S type	**32_N-QN-50-1/133_NE**	
Item no.	**23033962**	
N	**plug (m)**	
QN	**plug (m)**	
Packaging	single	
Material:		
N	brass/SUCO*	
QN	brass/SUCO*	
VSWR:	DC - 4 GHz: ≤ 1.035; 4 - 8 GHz: ≤ 1.06	
	8 - 10 GHz: ≤ 1.22	

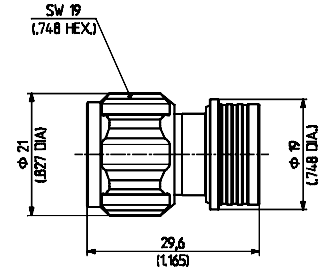

78

H+S type	**31_N-SMA-50-1/1-_UE**	
Item no.	**22542386**	
N	**jack (f)**	
SMA	**jack (f)**	
Packaging	single	
Material:		
N	brass/SUCO*	
SMA	CuBe/gold	
VSWR:	DC - 12.4 GHz: ≤ 1.05 + 0.015f	

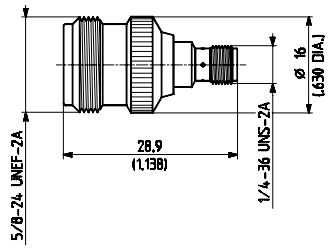

79

H+S type	**32_N-SMA-50-1/11-_NE**	
Item no.	**22542399**	
N	**plug (m)**	
SMA	**plug (m)**	
Packaging	single	
Material:		
N	brass/SUCO*	
SMA	CuBe/gold	
VSWR:	DC - 12.4 GHz: ≤ 1.05 + 0.017f	

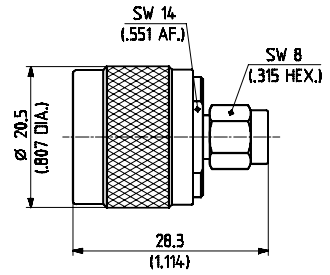

80

H+S type	**33_N-SMA-50-1/113_UE**	
Item no.	**22542421**	
N	**plug (m)**	
SMA	**jack (f)**	
Packaging	single	
Material:		
N	brass/SUCO*	
SMA	CuBe/gold	
VSWR:	DC - 12.4 GHz: ≤ 1.05 + 0.015f	

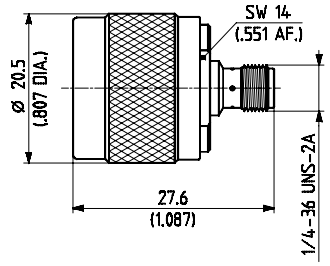

Adapt.

Material and plating descriptions may refer to the connector housing or outer contact.

SUCO* = SUCOPLATE®
SUPR** = SUCOPRO

81

H+S type	**33_SMA-N-50-1/1-_UE**	
Item no.	**22640154**	
SMA	**plug (m)**	
N	**jack (f)**	
Packaging	single	
Material:		
SMA	CuBe/gold	
N	brass/SUCO*	
VSWR:	DC - 12.4 GHz: ≤ 1.05 + 0.015f	

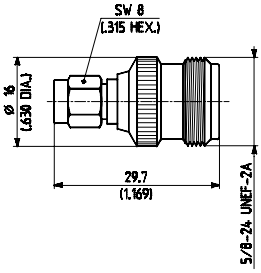

82

H+S type	**34_N-SMA-50-1/193_UE**	
Item no.	**22642820**	
N	**jack (f)**	
SMA	**jack (f)**	
Packaging	single	
Material:		
N	stainless steel	
SMA	stainless steel	
Mounting hole	ML 12	
VSWR:	DC - 12.4 GHz: ≤ 1.05 + 0.017f	

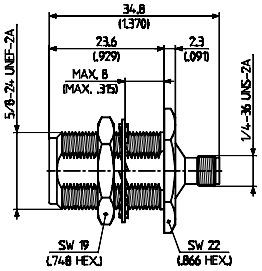

83

H+S type	**37_N-SMA-50-1/1-_UE**	
Item no.	**22543458**	
N	**jack (f)**	
SMA	**jack (f)**	
Packaging	single	
Material:		
N	brass/SUCO*	
SMA	CuBe/gold	
Mounting hole	ML 13/14	
VSWR:	DC - 12.4 GHz: ≤ 1.05 + 0.015f	

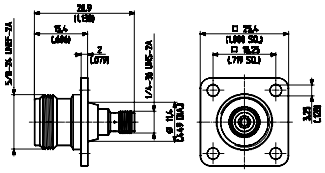

84

H+S type	**39_SMA-N-50-1/1-_NE**	
Item no.	**22640156**	
SMA	**plug (m)**	
N	**jack (f)**	
Packaging	single	
Material:		
SMA	CuBe/gold	
N	brass/SUCO*	
Mounting hole	ML 13/14	
VSWR:	DC - 12.4 GHz: ≤ 1.05 + 0.015f	

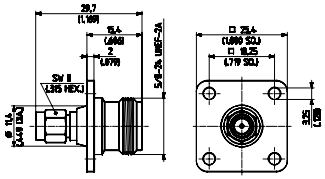

85

H+S type	**31_N-SMB-50-1/1-_UE**	
Item no.	**22542387**	
N	**jack (f)**	
SMB	**jack (f)**	
Packaging	single	
Material:		
N	brass/SUCO*	
SMB	brass/gold	
VSWR:	DC - 3 GHz: ≤ 1.03 + 0.08f 3 - 4 GHz: ≤ 1.27	

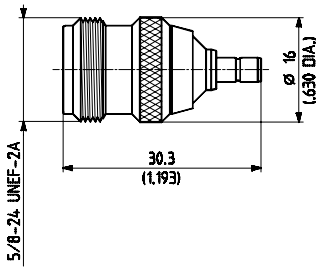

86

H+S type	**32_N-SMB-50-1/1-_UE**	
Item no.	**22542400**	
N	**plug (m)**	
SMB	**plug (m)**	
Packaging	single	
Material:		
N	brass/SUCO*	
SMB	brass/gold	
VSWR:0	DC - 4 GHz: ≤ 1.03 + 0.04f	

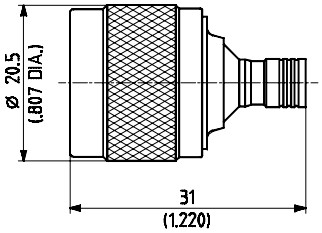

87

H+S type	**33_N-SMB-50-1/1-_UE**	
Item no.	**22542422**	
N	**plug (m)**	
SMB	**jack (f)**	
Packaging	single	
Material:		
N	brass/SUCO*	
SMB	brass/gold	
VSWR:	DC - 3 GHz: ≤ 1.03 + 0.08f 3 - 4 GHz: ≤ 1.27	

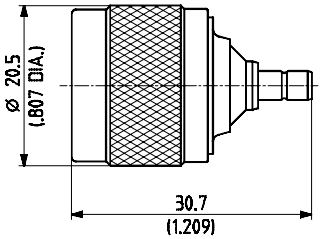

88

H+S type	**33_SMB-N-50-1/1-_UE**	
Item no.	**22640394**	
SMB	**plug (m)**	
N	**jack (f)**	
Packaging	single	
Material:		
SMB	brass/gold	
N	brass/SUCO*	
VSWR:	DC - 4 GHz: ≤ 1.06 + 0.04f	

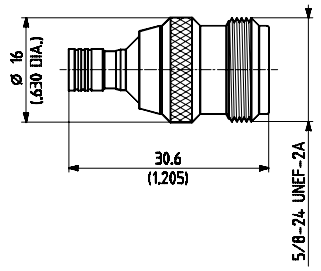

Material and plating descriptions may refer to the connector housing or outer contact.

SUCO* = SUCOPLATE®
SUPR** = SUCOPRO

89

	H+S type	**34_N-SMB-50-1/1-_UE**
	Item no.	**22642272**
N	**jack (f)**	
SMB	**jack (f)**	
Packaging	single	
Material:		
N	brass/SUCO*	
SMB	brass/gold	
Mounting hole	ML 12	
VSWR:	DC - 4 GHz: ≤ 1.22	

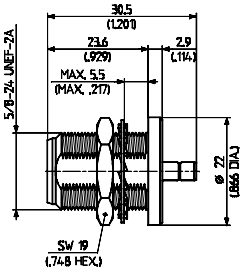

90

	H+S type	**37_N-SMB-50-1/1-_UE**
	Item no.	**22641514**
N	**jack (f)**	
SMB	**jack (f)**	
Packaging	single	
Material:		
N	brass/SUCO*	
SMB	brass/gold	
Mounting hole	ML 14	
VSWR:	DC - 4 GHz: ≤ 1.06 + 0.08f	

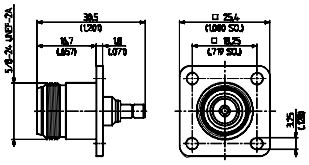

91

	H+S type	**31_N-SMC-50-1/1-_NE**
	Item no.	**22542389**
N	**jack (f)**	
SMC	**jack (f)**	
Packaging	single	
Material:		
N	brass/SUCO*	
SMC	brass/gold	
VSWR:	DC - 2 GHz: ≤ 1.10; 2 - 4 GHz: ≤ 1.20 4 - 10 GHz: ≤ 1.40	

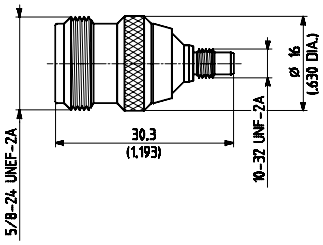

92

	H+S type	**32_N-SMC-50-1/1-_NE**
	Item no.	**22542402**
N	**plug (m)**	
SMC	**plug (m)**	
Packaging	single	
Material:		
N	brass/SUCO*	
SMC	brass/gold	
VSWR:	DC - 2 GHz: ≤ 1.10; 2 - 4 GHz: ≤ 1.20 4 - 10 GHz: ≤ 1.40	

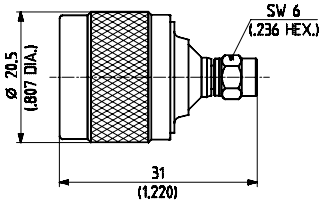

93

	H+S type	**33_N-SMC-50-1/1-_NE**
	Item no.	**22542423**
N	**plug (m)**	
SMC	**jack (f)**	
Packaging	single	
Material:		
N	brass/SUCO*	
SMC	brass/SUCO*	
VSWR:	DC - 2 GHz: ≤ 1.10; 2 - 4 GHz: ≤ 1.20 4 - 10 GHz: ≤ 1.40	

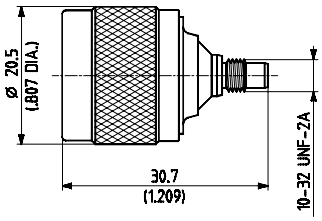

94

	H+S type	**33_SMC-N-50-1/1-_NE**
	Item no.	**22640406**
SMC	**plug (m)**	
N	**jack (f)**	
Packaging	single	
Material:		
SMC	brass/gold	
N	brass/SUCO*	
VSWR:	DC - 2 GHz: ≤ 1.10; 2 - 4 GHz: ≤ 1.20 4 - 10 GHz: ≤ 1.40	

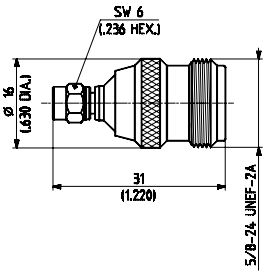

95

	H+S type	**37_N-SMC-50-1/1-_UE**
	Item no.	**22641154**
N	**jack (f)**	
SMC	**jack (f)**	
Packaging	single	
Material:		
N	brass/SUCO*	
SMC	brass/gold	
Mounting hole:	ML 14	
VSWR:	DC - 10 GHz: ≤ 1.06 + 0.084	

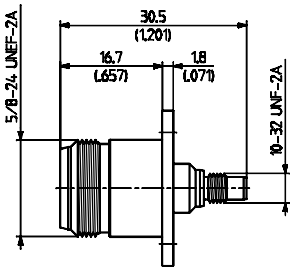

96

	H+S type	**31_N-TNC-50-1/133_UE**
	Item no.	**22542392**
N	**jack (f)**	
TNC	**jack (f)**	
Packaging	single	
Material:		
N	brass/SUCO*	
TNC	brass/SUCO*	
VSWR:	DC - 7 GHz: ≤ 1.06 + 0.12f 7 - 11 GHz: ≤ 1.90	

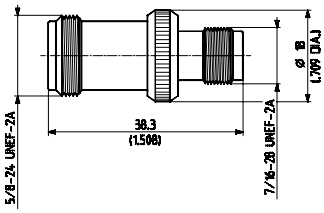

Material and plating descriptions may refer to the connector housing or outer contact.

SUCO* = SUCOPLATE®
SUPR** = SUCOPRO

97

H+S type		**32_N-TNC-50-1/—_UE**
Item no.		**22542406**
N	**plug (m)**	
TNC	**plug (m)**	
Packaging	single	
Material:		
N	brass/SUCO*	
TNC	brass/SUCO*	
VSWR:	DC - 11 GHz: ≤ 1.06 + 0.11f	

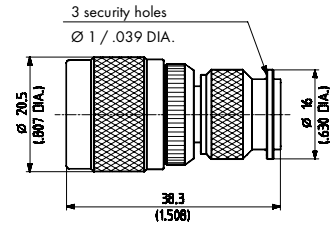

98

H+S type		**33_N-TNC-50-1/133_NE**
Item no.		**22542427**
N	**plug (m)**	
TNC	**jack (f)**	
Packaging	single	
Material:		
N	brass/SUCO*	
TNC	brass/SUCO*	
VSWR:	DC - 11 GHz: ≤ 1.13 + 0.02f	

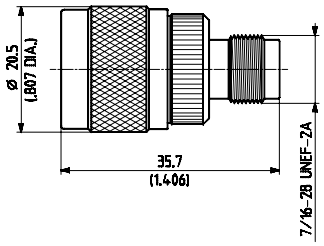

99

H+S type		**33_TNC-N-50-1/133_UE**
Item no.		**22640637**
TNC	**plug (m)**	
N	**jack (f)**	
Packaging	single	
Material:		
TNC	brass/SUCO*	
N	brass/SUCO*	
VSWR:	DC - 3 GHz: ≤ 1.05; 3 - 5.5 GHz: ≤ 1.18 5.5 - 11 GHz: ≤ 2.00	

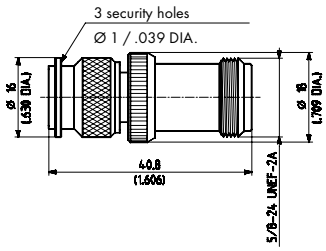

100

H+S type		**33_TNC-N-75-1/133_UE**
Item no.		**22658811**
TNC	**plug (m)**	
N	**jack (f)**	
Packaging	single	
Material:		
TNC	brass/SUCO*	
N	brass/SUCO*	

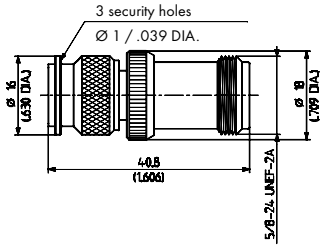

101

H+S type		**31_N-716-50-1/—_UE**
Item no.		**22640869**
N	**jack (f)**	
7/16	**jack (f)**	
Packaging	single	
Material:		
N	brass/SUCO*	
7/16	brass/SUCO*	
VSWR:	DC - 7.5 GHz: ≤ 1.03 + 0.02f	

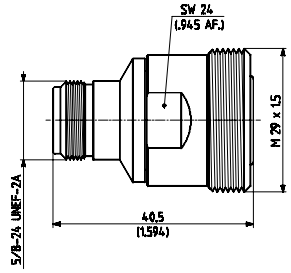

102

H+S type		**32_N-716-50-1/—_NE**
Item no.		**22544576**
N	**plug (m)**	
7/16	**plug (m)**	
Packaging	single	
Material:		
N	brass/SUCO*	
7/16	brass/silver	
VSWR:	DC - 7.5 GHz: ≤ 1.03 + 0.02f	

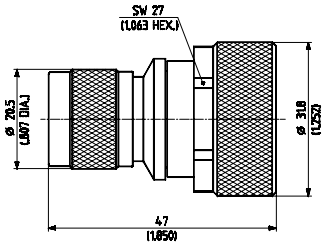

103

H+S type		**33_N-716-50-1/—_UE**
Item no.		**22641229**
N	**plug (m)**	
7/16	**jack (f)**	
Packaging	single	
Material:		
N	brass/SUCO*	
7/16	brass/silver	
VSWR:	DC - 7.5 GHz: ≤ 1.03 + 0.02f	

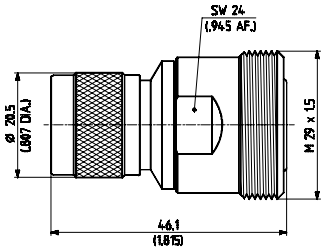

104

H+S type		**33_716-N-50-1/—_UE**
Item no.		**22544119**
7/16	**plug (m)**	
N	**jack (f)**	
Packaging	single	
Material:		
7/16	brass/silver	
N	brass/SUCO*	
VSWR:	DC - 7.5 GHz: ≤ 1.03 + 0.02f	

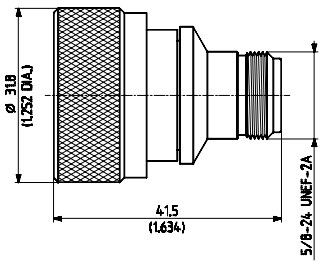

Material and plating descriptions may refer to the connector housing or outer contact.

SUCO* = SUCOPLATE®
SUPR** = SUCOPRO

105

105	**H+S type** **Item no.**	**37_N-716-50-1/003_-E** **23001317**

N	**jack (f)**
7/16	**jack (f)**
Packaging	single
Material:	
N	brass/silver
7/16	brass/silver
Mounting hole	ML 27

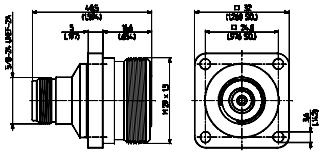

VSWR: DC - 7.5 GHz: ≤ 1.03 + 0.02f

106

106	**H+S type** **Item no.**	**33_QN-N-50-1/133_NE** **23036033**

QN	**plug (m)**
N	**jack (f)**
Packaging	single
Material:	
QN	brass/SUCO*
N	brass/SUCO*

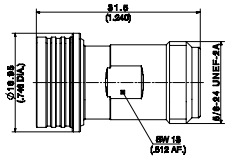

VSWR:

DC - 1 GHz	1 - 2.5 GHz	2.5 - 11 GHz
1.02	1.04	1.15

107

107	**H+S type** **Item no.**	**39_QN-PC35-U50-1/19-_NE** **23033936**

QN	**plug (m)**
PC35	**jack (f)**
Packaging	single
Material:	
QN	stainless steel
PC35	stainless steel

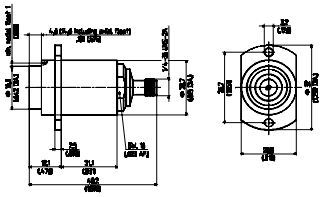

VSWR: DC - 2.5 GHz: ≤ 1.035; 2.5 - 6 GHz: ≤ 1.12
6 - 11 GHz: ≤ 1.22

108

108	**H+S type** **Item no.**	**33_QMA-SMA-50-1/133_NE** **84014876**

QMA	**plug (m)**
SMA	**jack (f)**
Packaging	single
Material:	
QMA	brass/SUCO*
SMA	brass/SUCO*

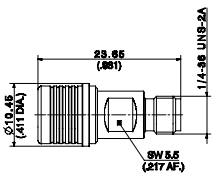

VSWR:

DC - 4 GHZ	4 - 6 GHz
1.05	1.17

109

109	**H+S type** **Item no.**	**39_QMA-SMA-U50-1/11-_NE** **23022741**

QMA	**plug (m)**
SMA	**jack (f)**
Packaging	single
Material:	
QMA	stainless steel
SMA	CuBe/SUPR**
Mounting hole	ML 58

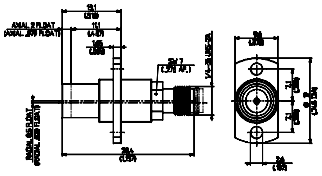

VSWR: DC - 2 GHz: ≤ 1.04; 2 - 4 GHz: ≤ 1.05
4 - 6 GHz: ≤ 1.08

110

110	**H+S type** **Item no.**	**33_SMA-QMA-50-1/133_NE** **84012204**

SMA	**plug (m)**
QMA	**jack (f)**
Packaging	single
Material:	
SMA	brass/SUCO*
QMA	brass/SUCO*

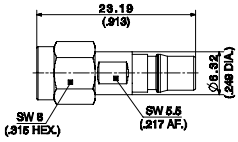

VSWR:

DC - 4 GHz	4 - 6 GHz
1.05	1.17

111

111	**H+S type** **Item no.**	**31_SMA-SMB-50-1/111_UE** **22641728**

SMA	**jack (f)**
SMB	**jack (f)**
Packaging	single
Material:	
SMA	CuBe/gold
SMB	brass/gold

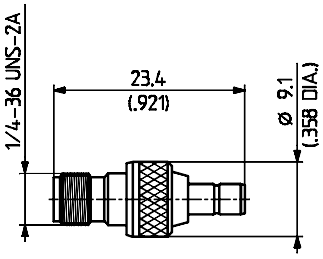

VSWR: DC - 4 GHz: ≤ 1.05 + 0.04f

112

112	**H+S type** **Item no.**	**33_SMA-SMB-50-1/111_NE** **22658917**

SMA	**plug (m)**
SMB	**jack (f)**
Packaging	single
Material:	
SMA	brass/gold
SMB	brass/gold

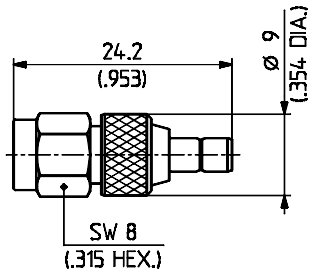

VSWR: DC - 4 GHz: ≤ 1.05 + 0.04 f
4 - 7 GHz: ≤ 1.21

Material and plating descriptions may refer to the connector housing or outer contact.

SUCO* = SUCOPLATE®
SUPR** = SUCOPRO

113

113	**H+S type** **Item no.**	**33_SMB-SMA-50-1/111_UE** **22641727**

SMB	**plug (m)**
SMA	**jack (f)**
Packaging	single
Material:	
SMB	brass/gold
SMA	CuBe/gold

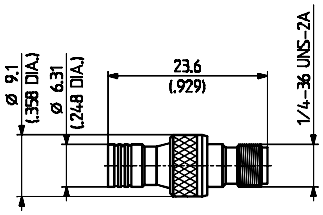

VSWR: DC - 4 GHz: ≤ 1.05 + 0.04f

114

114	**H+S type** **Item no.**	**31_SMA-TNC-50-1/1-_UE** **22640941**

SMA	**jack (f)**
TNC	**jack (f)**
Packaging	single
Material:	
SMA	CuBe/gold
TNC	brass/SUCO*

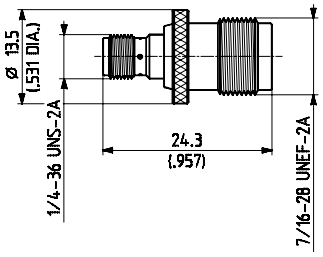

VSWR: DC - 1 GHz: ≤ 1.05; 1 - 2 GHz: ≤ 1.10
2 - 6 GHz: ≤ 1.20; 6 - 10 GHz: ≤ 1.30

115

115	**H+S type** **Item no.**	**32_SMA-TNC-50-1/1-_UE** **22640938**

SMA	**plug (m)**
TNC	**plug (m)**
Packaging	single
Material:	
SMA	CuBe/gold
TNC	brass/SUCO*

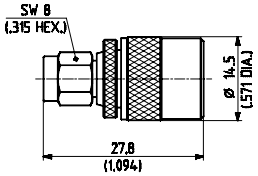

VSWR: DC - 2 GHz: ≤ 1.05; 2 - 4 GHz: ≤ 1.10
4 - 8 GHz: ≤ 1.20; 8 - 11 GHz: ≤ 1.30

116

116	**H+S type** **Item no.**	**33_SMA-TNC-50-1/1-_NE** **22640939**

SMA	**plug (m)**
TNC	**jack (f)**
Packaging	single
Material:	
SMA	CuBe/gold
TNC	brass/SUCO*

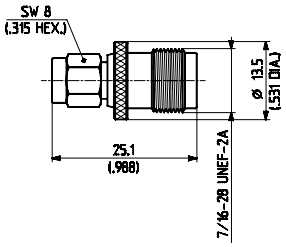

VSWR: DC - 6 GHz: ≤ 1.03 + 0.05f
6 - 11 GHz: ≤ 1.33

117

117	**H+S type** **Item no.**	**33_TNC-SMA-50-1/1-_UE** **22640940**

TNC	**plug (m)**
SMA	**jack (f)**
Packaging	single
Material:	
TNC	brass/SUCO*
SMA	CuBe/gold

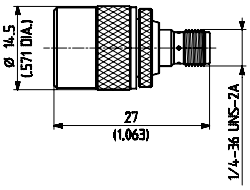

VSWR: DC - 2 GHz: ≤ 1.05; 2 - 4 GHz: ≤ 1.10
4 - 8 GHz: ≤ 1.20; 8 - 10 GHz: ≤ 1.30

118

118	**H+S type** **Item no.**	**33_SMB-TNC-50-2/1-_UE** **22640400**

SMB	**plug (m)**
TNC	**jack (f)**
Packaging	single
Material:	
SMB	brass/gold
TNC	brass/SUCO*

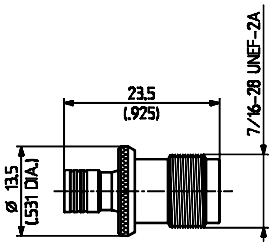

VSWR: DC - 4 GHz: ≤ 1.1 + 0.065f

Material and plating descriptions may refer to the connector housing or outer contact.

SUCO* = SUCOPLATE®
SUPR** = SUCOPRO

SPECIAL ADAPTORS

As an addition to the adaptors mentioned on the previous pages, we also provide various types of adaptors for Test&Measurement applications, which you will find on the following pages.

PRECISION ADAPTORS

QUICK-MATE ADAPTORS

PIM ADAPTORS

PRESICION ADAPTORS

		BNC		MMCX		MCX		SMPX		SK		QN		N	
		plug	jack	plug	jack	plug	jack	plug	jack	plug	jack	plug	jack	plug	jack
BNC	plug													201	202
	jack													203	200
MMCX	plug														
	jack														
MCX	plug														
	jack														
SMPX	plug										277				
	jack									274/275 276	271/272 273				
SK	plug								274/275 276						
	jack							277	271/272 273						
QN	plug														
	jack														
N	plug	201	203												
	jack	202	200												
PC24	plug									268	269				265
	jack									270	267			266	
PC35	plug					207	209							224	226/227
	jack					208	206							225	223
PC7		204	205									257	258	228/229	230/231 232
QMA	plug														234
	jack													235	233
SMA	plug			211	213									238	241 242
	jack			212	210									239/240	236/237 243
TNC	plug													245	247
	jack													246	244
41/95	plug													215	216
	jack													217	214
7/16	plug													220	222
	jack													221	219

Note:
The VSWR values stated for the precision Adaptors on the next pages are typical values!

Material and plating descriptions may refer to the connector housing or outer contact.

SUCO* = SUCOPLATE®
SUPR** = SUCOPRO

		PC24		PC35		PC7	QMA		SMA		TNC		41/95		7/16	
		plug	jack	plug	jack		plug	jack	plug	jack	plug	jack	plug	jack	plug	jack
BNC	plug					204										
	jack					205										
MMCX	plug								211	212						
	jack								213	210						
MCX	plug			207	208											
	jack			209	206											
SMPX	plug															
	jack															
SK	plug	268	270													
	jack	267	269													
QN	plug					257										
	jack					258										
N	plug		266	224	225	228/229		235	238	239 240	245	246	215	217	220	221
	jack	265		226 227	223	230/231 232	234	233	241 242	236/237 243	247	244	216	214	222	219
PC24	plug															
	jack															
PC35	plug					248/255	250	251								
	jack					256	252	249								
PC7				248 255	256				259	260	261 262	263 264			253	254
QMA	plug			250	252											
	jack			251	249											
SMA	plug					259										
	jack					260										
TNC	plug					261/262										
	jack					263/264										
41/95	plug															218
	jack															
7/16	plug					253										
	jack					254							218			

Material and plating descriptions may refer to the connector housing or outer contact.

SUCO* = SUCOPLATE®
SUPR** = SUCOPRO

200

H+S type	31_BNC-N-50-51/1-_UE
Item no.	22544049

BNC	**jack (f)**
N	**jack (f)**
Packaging	single
Material:	
BNC	stainless steel
N	stainless steel
VSWR:	DC - 4 GHz: ≤ 1.05 + 0.01f

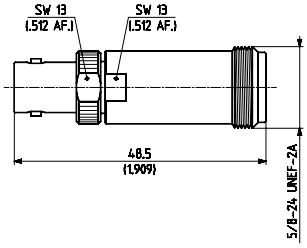

201

H+S type	32_BNC-N-50-51/1-_UE
Item no.	22544051

BNC	**plug (m)**
N	**plug (m)**
Packaging	single
Material:	
BNC	stainless steel
N	stainless steel
VSWR:	DC - 4 GHz: ≤ 1.05 + 0.01f

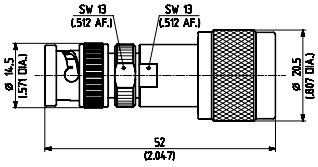

202

H+S type	33_BNC-N-50-51/—_UE
Item no.	22544052

BNC	**plug (m)**
N	**jack (f)**
Packaging	single
Material:	
BNC	stainless steel
N	stainless steel
VSWR:	DC - 4 GHz: ≤ 1.05 + 0.01f

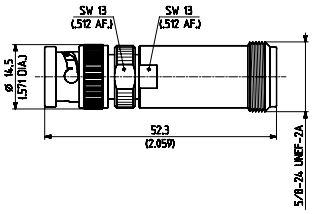

203

H+S type	33_N-BNC-50-51/1-_UE
Item no.	22544050

N	**plug (m)**
BNC	**jack (f)**
Packaging	single
Material:	
N	stainless steel
BNC	stainless steel
VSWR:	DC - 4 GHz: ≤ 1.05 + 0.01f

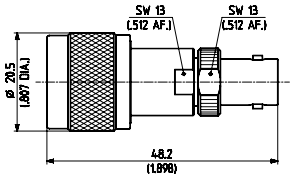

204

H+S type	32_BNC-PC7-50-1/1-_UE
Item no.	22544047

BNC	**plug (m)**
PC7	
Packaging	single
Material:	
BNC	stainless steel
PC7	brass/gold
VSWR:	DC - 4 GHz: ≤ 1.02 + 0.006f

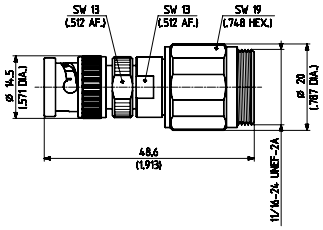

205

H+S type	33_PC7-BNC-50-1/1-_UE
Item no.	22543918

PC7	
BNC	**jack (f)**
Packaging	single
Material:	
PC7	brass/gold
BNC	stainless steel
VSWR:	DC - 4 GHz: ≤ 1.02 + 0.006f

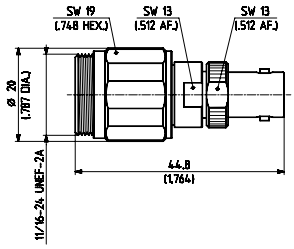

206

H+S type	31_MCX-PC35-50-1/111_NE
Item no.	22651593

MCX	**jack (f)**
PC35	**jack (f)**
Packaging	single
Material:	
MCX	CuBe/SUPR**
PC35	CuBe/SUPR**
VSWR:	DC - 3 GHz: ≤ 1.065; 3 - 6 GHz: ≤ 1.09

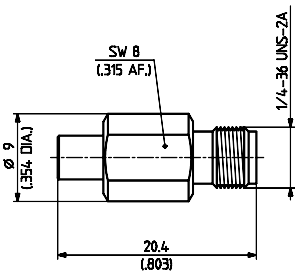

207

H+S type	32_MCX-PC35-50-1/111_NE
Item no.	22651600

MCX	**plug (m)**
PC35	**plug (m)**
Packaging	single
Material:	
MCX	CuBe/SUPR**
PC35	CuBe/SUPR**
VSWR:	DC - 3.5 GHz: ≤ 1.07; 3.5 - 6 GHz: ≤ 1.09

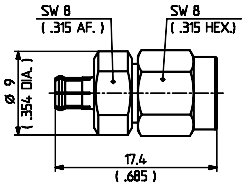

Material and plating descriptions may refer to the connector housing or outer contact.

SUCO* = SUCOPLATE®
SUPR** = SUCOPRO

208

H+S type		**33_MCX-PC35-50-1/111_NE**
Item no.		**22651594**
MCX	**plug (m)**	
PC35	**jack (f)**	
Packaging	single	
Material:		
MCX	CuBe/SUPR**	
PC35	CuBe/SUPR**	
VSWR:	DC - 3.5 GHz: ≤ 1.065 3.5 - 6 GHz: ≤ 1.094	

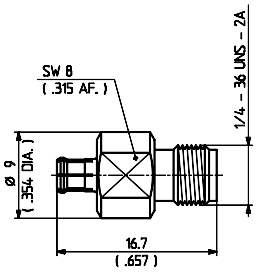

209

H+S type		**33_PC35-MCX-50-1/111_NE**
Item no.		**22651599**
PC35	**plug (m)**	
MCX	**jack (f)**	
Packaging	single	
Material:		
PC35	CuBe/SUPR**	
MCX	CuBe/SUPR**	
VSWR:	DC - 3.5 GHz: ≤ 1.065 3.5 - 6 GHz: ≤ 1.094	

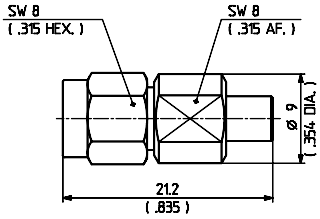

210

H+S type		**31_MMCX-SMA-50-2/111_NE**
Item no.		**22658201**
MMCX	**jack (f)**	
SMA	**jack (f)**	
Packaging	single	
Material:		
MMCX	CuBe/SUPR**	
SMA	CuBe/SUPR**	
VSWR:	DC - 3.5 GHz: ≤ 1.07 3.5 - 6 GHz: ≤ 1.09	

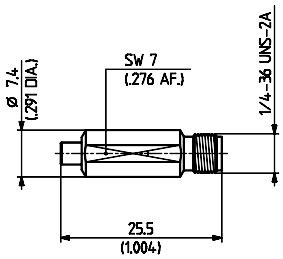

211

H+S type		**32_MMCX-SMA-50-2/111_NE**
Item no.		**22658202**
MMCX	**plug (m)**	
SMA	**plug (m)**	
Packaging	single	
Material:		
MMCX	CuBe/SUPR**	
SMA	CuBe/SUPR**	
VSWR:	DC - 3.5 GHz: ≤ 1.07; 3.5 - 6 GHz: ≤ 1.09	

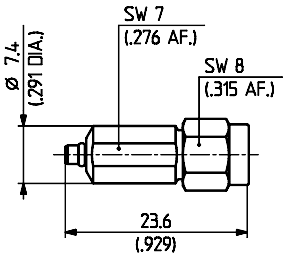

212

H+S type		**33_MMCX-SMA-50-2/111_NE**
Item no.		**22658203**
MMCX	**plug (m)**	
SMA	**jack (f)**	
Packaging	single	
Material:		
MMCX	CuBe/SUPR**	
SMA	CuBe	
VSWR:	DC - 3.5 GHz: ≤ 1.065; 3.5 - 6 GHz: ≤ 1.094	

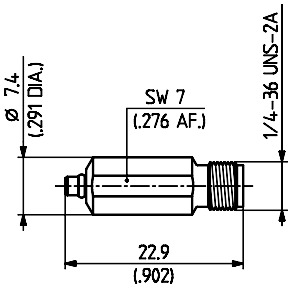

213

H+S type		**33_SMA-MMCX-50-2/111_NE**
Item no.		**22658204**
SMA	**plug (m)**	
MMCX	**jack (f)**	
Packaging	single	
Material:		
SMA	CuBe/SUPR**	
MMCX	CuBe/SUPR**	
VSWR:	DC - 3.5 GHz: ≤ 1.065 3.5 - 6 GHz: ≤ 1.094	

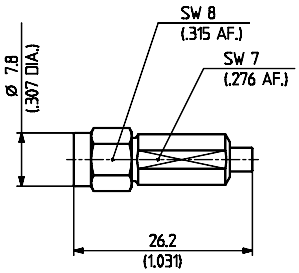

214

H+S type		**31_N-4195-50-12/139_UE**
Item no.		**22646160**
N	**jack (f)**	
41/95	**jack (f)**	
Packaging	single	
Material:		
N	stainless steel	
41/95	brass/SUCO*	
VSWR:	DC - 6 GHz: ≤ 1.05; 6 - 14 GHz: ≤ 1.12	

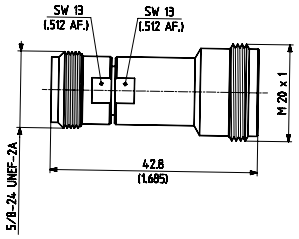

215

H+S type		**32_4195-N-50-1/1-_UE**
Item no.		**22650781**
41/95	**plug (m)**	
N	**plug (m)**	
Packaging	single	
Material:		
41/95	brass/SUCO*	
N	stainless steel	
VSWR:	DC - 14 GHz: ≤ 1.06	

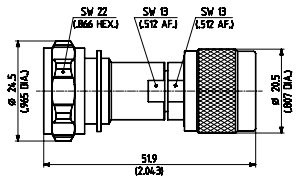

Adapt.

Material and plating descriptions may refer to the connector housing or outer contact.

SUCO* = SUCOPLATE®
SUPR** = SUCOPRO

216

H+S type	**33_4195-N-50-1/—_UE**	
Item no.	**22646154**	
41/95	**plug (m)**	
N	**jack (f)**	
Packaging	single	
Material:		
41/95	brass/SUCO*	
N	stainless steel	
VSWR:	DC - 6 GHz: ≤ 1.05; 6 - 14 GHz: ≤ 1.12	

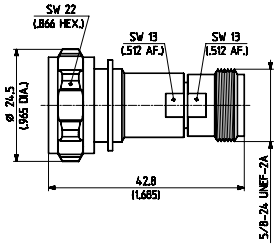

217

H+S type	**33_N-4195-50-51/1-3_UE**	
Item no.	**22648618**	
N	**plug (m)**	
41/95	**jack (f)**	
Packaging	single	
Material:		
N	stainless steel	
41/95	brass/SUCO*	
VSWR:	DC - 6 GHz: ≤ 1.05; 6 - 14 GHz: ≤ 1.12	

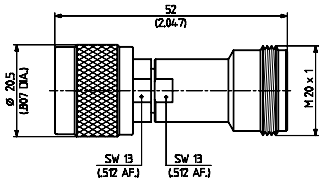

218

H+S type	**33_4195-716-50-1/-33_NE**	
Item no.	**22650069**	
41/95	**plug (m)**	
7/16	**jack (f)**	
Packaging	single	
Material:		
41/95	brass/SUCO*	
7/16	brass/SUCO*	
VSWR:	DC - 7.5 GHz: ≤ 1.06	

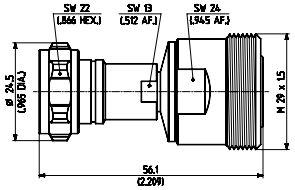

219

H+S type	**31_N-716-50-51/-33_NE**	
Item no.	**22544129**	
N	**jack (f)**	
7/16	**jack (f)**	
Packaging	single	
Material:		
N	brass/SUCO*	
7/16	brass/SUCO*	
VSWR:	DC - 7.5 GHz: ≤ 1.03 + 0.004f	

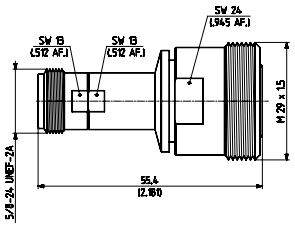

220

H+S type	**32_N-716-50-51/-33_NE**	
Item no.	**22544127**	
N	**plug (m)**	
7/16	**plug (m)**	
Packaging	single	
Material:		
N	brass/silver	
7/16	brass/silver	
VSWR:	DC - 7.5 GHz: ≤ 1.03 + 0.004f	

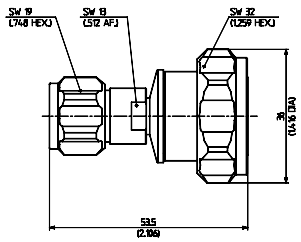

221

H+S type	**33_N-716-50-51/-33_NE**	
Item no.	**22544123**	
N	**plug (m)**	
7/16	**jack (f)**	
Packaging	single	
Material:		
N	brass/SUCO*	
7/16	brass/SUCO*	
VSWR:	DC - 7.5 GHz: ≤ 1.03 + 0.004f	

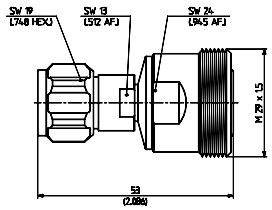

222

H+S type	**33_716-N-50-51/-33 NE**	
Item no.	**22544125**	
7/16	**plug (m)**	
N	**jack (f)**	
Packaging	single	
Material:		
7/16	brass/SUCO*	
N	brass/SUCO*	
VSWR:	DC - 7.5 GHz: ≤ 1.03 + 0.004f	

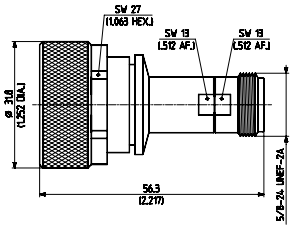

223

H+S type	**31_N-PC35-50-1/1-_UE**	
Item no.	**22643960**	
N	**jack (f)**	
PC35	**jack (f)**	
Packaging	single	
Material:		
N	stainless steel	
PC35	stainless steel	
VSWR:	DC - 12.4 GHz: ≤ 1.10 12.4 - 18 GHz: ≤ 1.15	

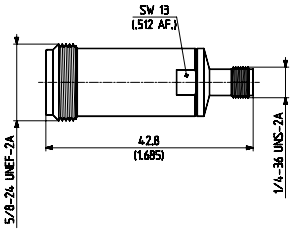

Material and plating descriptions may refer to the connector housing or outer contact.

SUCO* = SUCOPLATE®
SUPR** = SUCOPRO

224

H+S type	32_N-PC35-50-1/1-_UE
Item no.	22643957

N	**plug (m)**
PC35	**plug (m)**
Packaging	single
Material:	
N	stainless steel
PC35	stainless steel
VSWR:	DC - 12.4 GHz: ≤ 1.10 12.4 - 18 GHz: ≤ 1.15

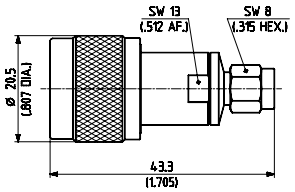

225

H+S type	33_N-PC35-50-1/1-_UE
Item no.	22643959

N	**plug (m)**
PC35	**jack (f)**
Packaging	single
Material:	
N	stainless steel
PC35	stainless steel
VSWR:	DC - 12.4 GHz: ≤ 1.10 12.4 - 18 GHz: ≤ 1.15

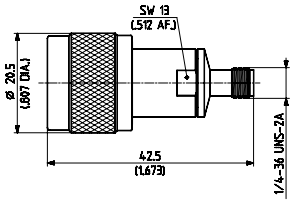

226

H+S type	33_PC35-N-50-1/1-_UE
Item no.	22643958

PC35	**plug (m)**
N	**jack (f)**
Packaging	single
Material:	
PC35	stainless steel
N	stainless steel
VSWR:	DC - 12.4 GHz: ≤ 1.10 12.4 - 18 GHz: ≤ 1.15

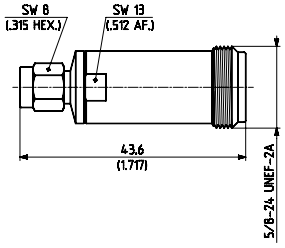

227

H+S type	39_PC35-N-50-1/1-_UE
Item no.	22660363

PC35	**plug (m)**
N	**jack (f)**
Packaging	single
Material:	
PC35	stainless steel
N	stainless steel
VSWR:	DC - 12.4 GHz: ≤ 1.10 12.4 - 18 GHz: ≤ 1.15

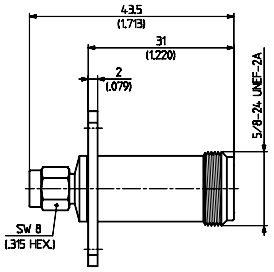

228

H+S type	32_N-PC7-50-1/1-_UE
Item no.	22543571

N	**plug (m)**
PC7	
Packaging	single
Material:	
N	stainless steel
PC7	brass/gold
VSWR:	DC - 18 GHz: ≤ 1.02 + 0.002f

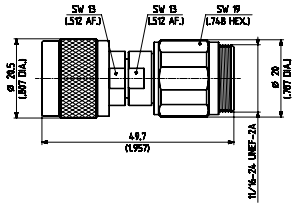

229

H+S type	32_N-PC7-50-6/1-_NE
Item no.	23032917

N	**plug (m)**
PC7	
Packaging	single
Material:	
N	stainless steel
PC7	brass/gold
El. length:	typ. 41.85mm
VSWR:	DC - 3 GHz: ≤ 1.03; 3 - 6 GHz: ≤ 1.05 6 - 11 GHz: ≤ typ. 1.12

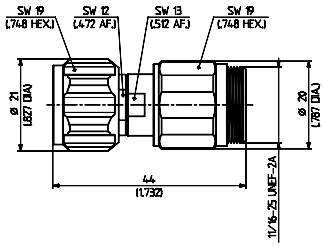

230

H+S type	33_PC7-N-50-1/1-_UE
Item no.	22543547

PC7	
N	**jack (f)**
Packaging	single
Material:	
PC7	brass/gold
N	stainless steel
VSWR:	DC - 18 GHz: ≤ 1.02 + 0.002f

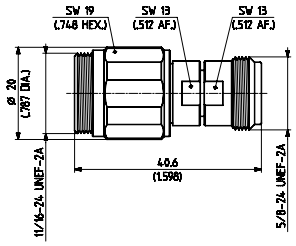

231

H+S type	33_PC7-N-50-5/-33_NE
Item no.	23004036

PC7	
N	**jack (f)**
Packaging	single
Material:	
PC7	brass/gold
N	stainless steel
VSWR:	DC - 18 GHz: ≤ 1.03 + 0.002f

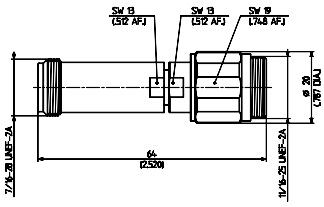

Adapt.

Material and plating descriptions may refer to the connector housing or outer contact.

SUCO* = SUCOPLATE®
SUPR** = SUCOPRO

232

H+S type	33_PC7-N-50-6/1-_NE
Item no.	23032916

PC7	
N	**jack (f)**
Packaging	single
Material:	
PC7	brass/gold
N	stainless steel
El. length:	typ. 41.85mm

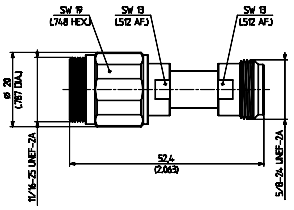

VSWR: DC - 3 GHz: ≤ 1.03; 3 - 6 GHz: ≤ 1.05
6 - 11 GHz: ≤ typ. 1.12

233

H+S type	31_N-QMA-50-1/1-_NE
Item no.	23027960

N	**jack (f)**
QMA	**jack (f)**
Packaging	single
Material:	
N	stainless steel
QMA	stainless steel

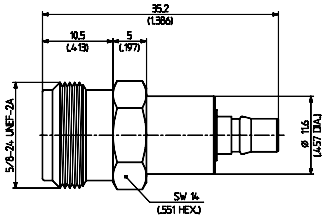

VSWR: DC - 2.5 GHz: ≤ 1.036
2.5 - 6 GHz ≤ 1.135

234

H+S type	33_QMA-N-50-1/133_NE
Item no.	23023143

QMA	**plug (m)**
N	**jack (f)**
Packaging	single
Material:	
QMA	brass/SUCO*
N	brass/SUCO*

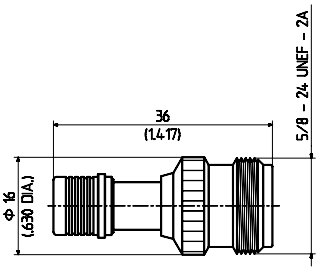

VSWR: DC - 6 GHz: ≤ 1.04

235

H+S type	33_N-QMA-50-1/133_NE
Item no.	23024265

N	**plug (m)**
QMA	**jack (f)**
Packaging	single
Material:	
N	brass/SUCO*
QMA	brass/SUCO*

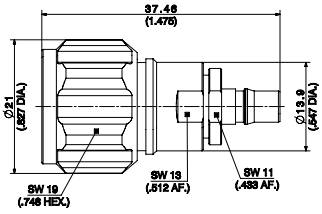

VSWR: DC - 6 GHz: ≤ 1.04

236

H+S type	31_N-SMA-50-51/1-_UE
Item no.	22543928

N	**jack (f)**
SMA	**jack (f)**
Packaging	single
Material:	
N	stainless steel
SMA	CuBe/SUPR**

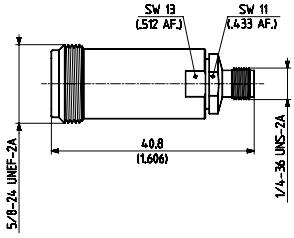

VSWR: DC - 18 GHz: ≤ 1.025 + 0.007f

237

H+S type	31_N-SMA-50-51/1-_NE
Item no.	22660178

N	**jack (f)**
SMA	**jack (f)**
Packaging	single
Material:	
N	stainless steel
SMA	CuBe/gold

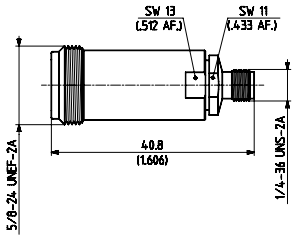

VSWR: DC - 18 GHz: ≤ 1.025 + 0.007f

238

H+S type	32_N-SMA-50-51/1-_UE
Item no.	22543916

N	**plug (m)**
SMA	**plug (m)**
Packaging	single
Material:	
N	stainless steel
SMA	CuBe/gold

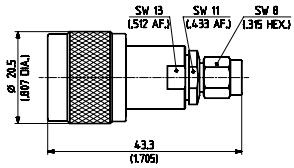

VSWR: DC - 18 GHz: ≤ 1.025 + 0.007f

239

H+S type	33_N-SMA-50-51/1-_UE
Item no.	22543925

N	**plug (m)**
SMA	**jack (f)**
Packaging	single
Material:	
N	stainless steel
SMA	CuBe/gold

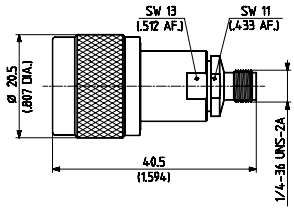

VSWR: DC - 18 GHz: ≤ 1.025 + 0.007f

Material and plating descriptions may refer to the connector housing or outer contact.

SUCO* = SUCOPLATE®
SUPR** = SUCOPRO

240

240	**H+S type**	**33_N-SMA-50-51/1-_NE**
	Item no.	**22660180**

N	**plug (m)**
SMA	**jack (f)**
Packaging	single
Material:	
N	stainless steel
SMA	CuBe/gold

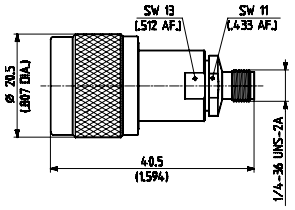

VSWR: DC - 18 GHz: ≤ 1.025 + 0.007f

241

241	**H+S type**	**33_SMA-N-50-51/1-_UE**
	Item no.	**22543926**

SMA	**plug (m)**
N	**jack (f)**
Packaging	single
Material:	
SMA	CuBe/gold
N	stainless steel

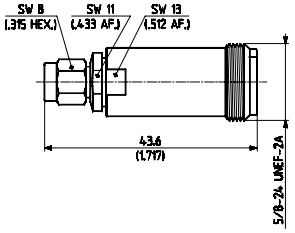

VSWR: DC - 18 GHz: ≤ 1.025 + 0.007f

242

242	**H+S type**	**33_SMA-N-50-51/1-_NE**
	Item no.	**22660181**

SMA	**plug (m)**
N	**jack (f)**
Packaging	single
Material:	
SMA	CuBe/gold
N	stainless steel

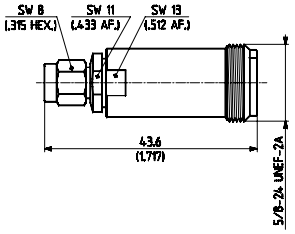

VSWR: DC - 18 GHz: ≤ 1.025 + 0.007f

243

243	**H+S type**	**37_N-SMA-50-51/1-_NE**
	Item no.	**22645162**

N	**jack (f)**
SMA	**jack (f)**
Packaging	single
Material:	
N	stainless steel
SMA	CuBe/gold

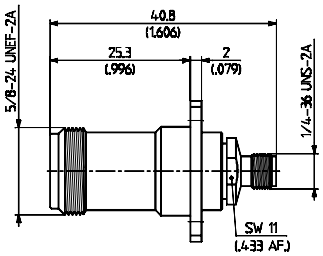

VSWR: DC - 18 GHz: ≤ 1.025 + 0.007f

244

244	**H+S type**	**31_N-TNC-50-51/1-_UE**
	Item no.	**22543954**

N	**jack (f)**
TNC	**jack (f)**
Packaging	single
Material:	
N	stainless steel
TNC	stainless steel

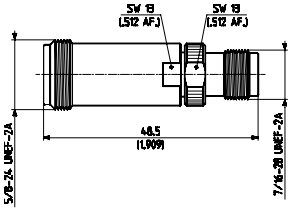

VSWR: DC - 12.4 GHz: ≤ 1.05 + 0.01f

245

245	**H+S type**	**32_N-TNC-50-51/1-_UE**
	Item no.	**22543953**

N	**plug (m)**
TNC	**plug (m)**
Packaging	single
Material:	
N	stainless steel
TNC	stainless steel

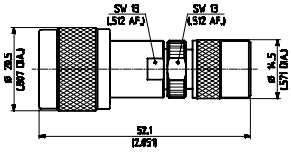

VSWR: DC - 12.4 GHz: ≤ 1.05 + 0.01f

246

246	**H+S type**	**33_N-TNC-50-51/1-_UE**
	Item no.	**22543955**

N	**plug (m)**
TNC	**jack (f)**
Packaging	single
Material:	
N	stainless steel
TNC	stainless steel

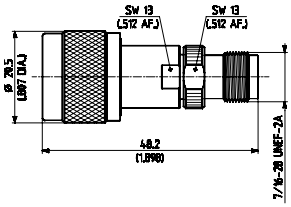

VSWR: DC - 12.4 GHz: ≤ 1.05 + 0.01f

247

247	**H+S type**	**33_TNC-N-50-51/–_UE**
	Item no.	**22544046**

TNC	**plug (m)**
N	**jack (f)**
Packaging	single
Material:	
TNC	stainless steel
N	stainless steel

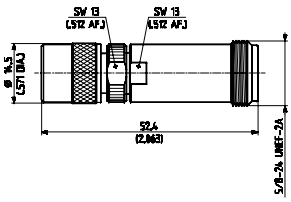

VSWR: DC - 12.4 GHz: ≤ 1.05 + 0.01f

Adapt.

Material and plating descriptions may refer to the connector housing or outer contact.

SUCO* = SUCOPLATE®
SUPR** = SUCOPRO

248

248	**H+S type** **Item no.**	**32_PC35-PC7-50-3/-33_NE** **23003902**

PC35 **plug (m)**
PC7

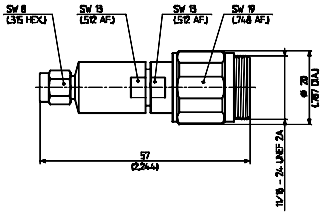

Packaging single

Material:
PC35 brass/SUCO*
PC7 brass/gold

VSWR: DC - 18 GHz: ≤ 1.06

249

249	**H+S type** **Item no.**	**31_PC35-QMA-50-1/199_NE** **23017468**

PC35 **jack (f)**
QMA **jack (f)**

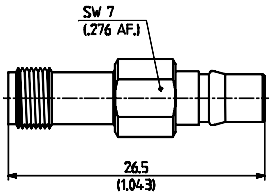

Packaging single

Material:
PC35 stainless steel
QMA stainless steel
El. length: 25.4 ± 2.6 mm

VSWR: DC - 1.5 GHz: ≤ 1.036; 1.5 - 6 GHz: ≤ 1.065
6 - 18 GHz: ≤ 1.22

250

250	**H+S type** **Item no.**	**32_PC35-QMA-50-1/1-_NE** **23017489**

PC35 **plug (m)**
QMA **plug (m)**

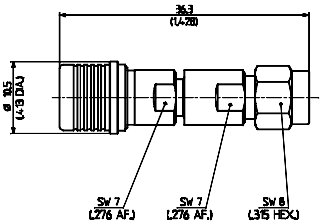

Packaging single

Material:
PC35 stainless steel
QMA st.steel/brass
El. length: 25.4 ± 2.6 mm

VSWR: DC - 1.5 GHz: ≤ 1.036; 1.5 - 6 GHz: ≤ 1.065
6 - 18 GHz: ≤ 1.22

251

251	**H+S type** **Item no.**	**33_PC35-QMA-50-1/199_NE** **23017467**

PC35 **plug (m)**
QMA **jack (f)**

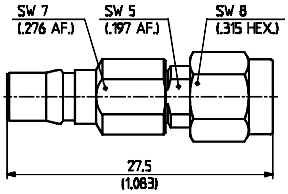

Packaging single

Material:
PC35 stainless steel
QMA stainless steel
El. length: 25.4 ± 2.6 mm

VSWR: DC - 1.5 GHz: ≤ 1.036; 1.5 - 6 GHz: ≤ 1.065
6 - 18 GHz: ≤ 1.22

252

252	**H+S type** **Item no.**	**33_QMA-PC35-50-1/1-_NE** **23017488**

QMA **plug (m)**
PC35 **jack (f)**

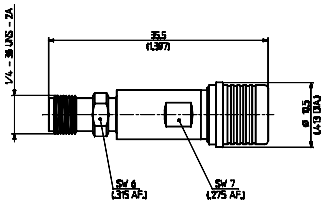

Packaging single

Material:
QMA stainless steel
PC35 stainless steel
El. length: 25.4 ± 2.6 mm

VSWR: DC - 1.5 GHz: ≤ 1.036; 1.5 - 6 GHz: ≤ 1.065
6 - 18 GHz: ≤ 1.22

253

253	**H+S type** **Item no.**	**32_PC7-716-50-1/-3_NE** **22544128**

PC7
7/16 **plug (m)**

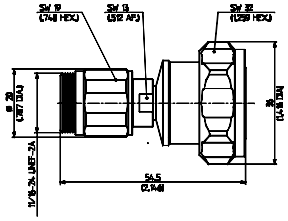

Packaging single

Material:
PC7 brass/SUPR**
7/16 brass/SUCO*

VSWR: DC - 7.5 GHz: ≤ 1.03 + 0.004f

254

254	**H+S type** **Item no.**	**33_PC7-716-50-1/-3_NE** **22544126**

PC7
7/16 **jack (f)**

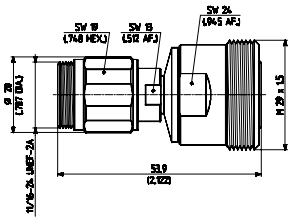

Packaging single

Material:
PC7 brass/SUPR**
7/16 brass/SUCO*

VSWR: DC - 7.5 GHz: ≤ 1.03 + 0.004f

255

255	**H+S type** **Item no.**	**32_PC7-PC35-50-1/1-_UE** **22644230**

PC7
PC35 **plug (m)**

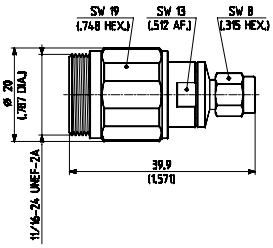

Packaging single

Material:
PC7 brass/gold
PC35 stainless steel

VSWR: DC - 15 GHz: ≤ 1.05; 15 - 18 GHz: ≤ 1.09

Material and plating descriptions may refer to the connector housing or outer contact.

SUCO* = SUCOPLATE®
SUPR** = SUCOPRO

256

H+S type	33_PC7-PC35-50-1/1-_UE
Item no.	22644231

PC7
PC35 — **jack (f)**

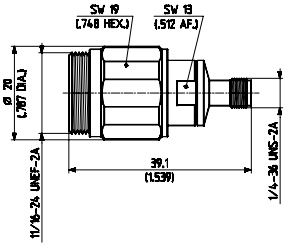

Packaging: single

Material:
PC7: brass/gold
PC35: stainless steel

VSWR: DC - 15 GHz: ≤ 1.05; 15 - 18 GHz: ≤ 1.09

257

H+S type	32_PC7-QN-50-1/1-_NE
Item no.	23032720

PC7
QN — **plug (m)**

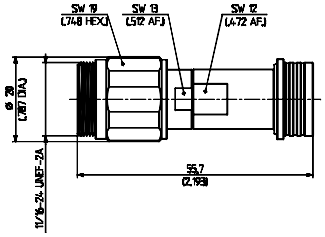

Packaging: single

Material:
PC7: brass/gold
QN: stainless steel
El. length: typ. 41.85mm

VSWR: DC - 3 GHz: ≤ 1.03; 3 - 6 GHz: ≤ 1.05
6 - 11 GHz: ≤ typ. 1.12

258

H+S type	33_PC7-QN-50-1/1-_NE
Item no.	23032722

PC7
QN — **jack (f)**

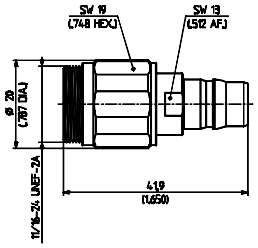

Packaging: single

Material:
PC7: brass/gold
QN: stainless steel
El. length: typ. 41.85mm

VSWR: DC - 3 GHz: ≤ 1.03; 3 - 6 GHz: ≤ 1.05
6 - 11 GHz: ≤ typ. 1.12

259

H+S type	32_PC7-SMA-50-1/—_UE
Item no.	22543546

PC7
SMA — **plug (m)**

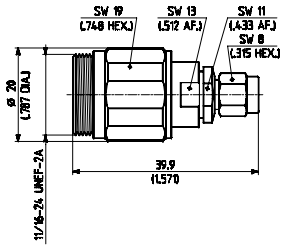

Packaging: single

Material:
PC7: brass/gold
SMA: CuBe/gold

VSWR: DC - 18 GHz: ≤ 1.025 + 0.002f

260

H+S type	33_PC7-SMA-50-1/1-_UE
Item no.	22543548

PC7
SMA — **jack (f)**

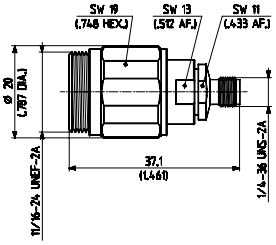

Packaging: single

Material:
PC7: brass/gold
SMA: CuBe/gold

VSWR: DC - 18 GHz: ≤ 1.025 + 0.002f

261

H+S type	32_PC7-TNC-50-1/1-_UE
Item no.	22544048

PC7
TNC — **plug (m)**

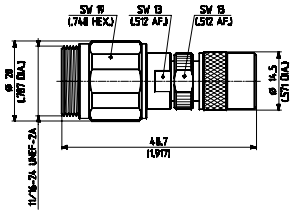

Packaging: single

Material:
PC7: brass/gold
TNC: stainless steel

VSWR: DC - 12.4 GHz: ≤ 1.02 + 0.009f

262

H+S type	32_PC7-TNC-50-52/-33_NE
Item no.	23003983

PC7
TNC — **plug (m)**

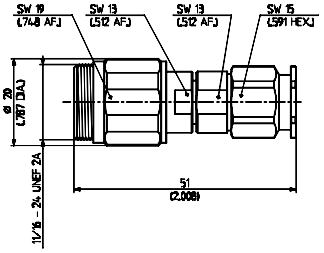

Packaging: single

Material:
PC7: brass/gold
TNC: stainless steel

VSWR: DC - 18 GHz: ≤ 1.03 + 0.009f

263

H+S type	33_PC7-TNC-50-51/11-_UE
Item no.	22643455

PC7
TNC — **jack (f)**

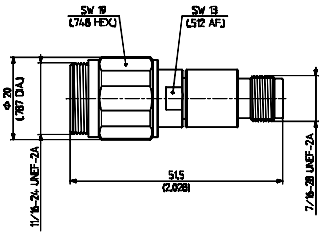

Packaging: single

Material:
PC7: brass/SUCO*
TNC: stainless steel

VSWR: DC - 18 GHz: ≤ 1.05 + 0.005f

Adapt.

Material and plating descriptions may refer to the connector housing or outer contact.

SUCO* = SUCOPLATE®
SUPR** = SUCOPRO

264

H+S type	**33_PC7-TNC-50-52/-33_NE**	
Item no.	**23003920**	
PC7		
TNC	**jack (f)**	
Packaging	single	
Material:		
PC7	brass/gold	
TNC	stainless steel	
VSWR:	DC - 18 GHz: ≤ 1.03 + 0.009f	

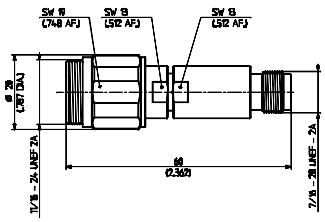

265

H+S type	**33_PC24-N-50-1/199_NE**	
Item no.	**22650021**	
PC24	**plug (m)**	
N	**jack (f)**	
Packaging	single	
Material:		
PC24	stainless steel	
N	stainless steel	
VSWR:	DC - 10 GHz: ≤ 1.05; 10 - 18 GHz: ≤ 1.08	

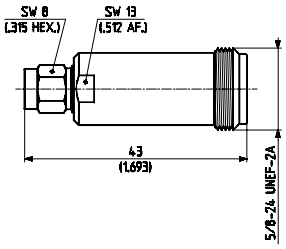

266

H+S type	**33_N-PC24-50-1/199_UE**	
Item no.	**22649932**	
N	**plug (m)**	
PC24	**jack (f)**	
Packaging	single	
Material:		
N	stainless steel	
PC24	stainless steel	
VSWR:	DC - 10 GHz: ≤ 1.05; 10 - 18 GHz: ≤ 1.08	

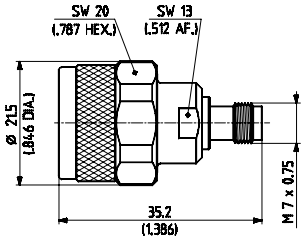

267

H+S type	**31_PC24-SK-50-1/199_NE**	
Item no.	**84008075**	
PC24	**jack (f)**	
SK	**jack (f)**	
Packaging	single	
Material:		
PC24	stainless steel	
SK	stainless steel	
VSWR:	DC - 40 GHz: ≤ 1.12	

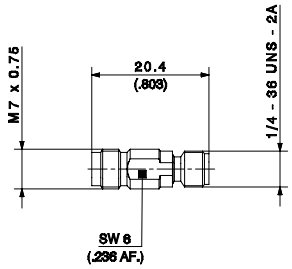

268

H+S type	**32_PC24-SK-50-1/199_NE**	
Item no.	**23004729**	
PC24	**plug (m)**	
SK	**plug (m)**	
Packaging	single	
Material:		
PC24	stainless steel	
SK	stainless steel	
El. length:	16.1 ± 0.1 mm	
VSWR:	DC - 40 GHz: ≤ 1.12	

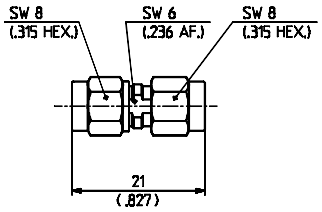

269

H+S type	**33_PC24-SK-50-2/199_NE**	
Item no.	**23004730**	
PC24	**plug (m)**	
SK	**jack (f)**	
Packaging	single	
Material:		
PC24	stainless steel	
SK	stainless steel	
El. length:	16.1 ± 0.1 mm	
VSWR:	DC - 40 GHz: ≤ 1.12	

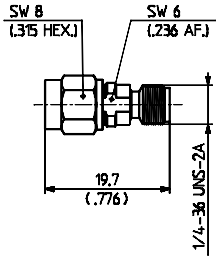

270

H+S type	**33_SK-PC24-50-1/199_NE**	
Item no.	**23004731**	
SK	**plug (m)**	
PC24	**jack (f)**	
Packaging	single	
Material:		
PC24	stainless steel	
SK	stainless steel	
El. length:	16.1 ± 0.1 mm	
VSWR:	DC - 40 GHz: ≤ 1.12	

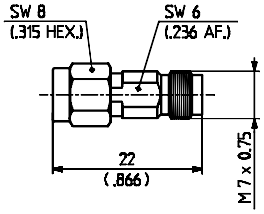

271

H+S type	**31_SK-SMPX-50-1/199_NE**	
Item no.	**23021816**	
SK	**jack (f)**	
SMPX	**jack (f)**	
Packaging	single	
Material:		
SK	stainless steel	
SMPX	stainless steel	
Note:	**full detent**	
VSWR:	DC - 15 GHz: ≤ 1.105; 15 - 30 GHz: ≤ 1.152 30 - 40 GHz: ≤ 1.222	

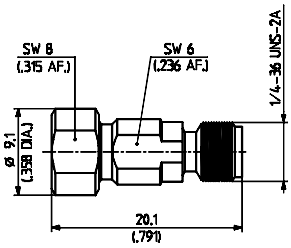

Material and plating descriptions may refer to the connector housing or outer contact.

SUCO* = SUCOPLATE®
SUPR** = SUCOPRO

272

	H+S type	**31_SK-SMPX-50-2/199_NE**
	Item no.	**23021817**
SK	**jack (f)**	
SMPX	**jack (f)**	
Packaging	single	
Material:		
SK	stainless steel	
SMPX	stainless steel	
Note:	**limited detent**	
VSWR:	DC - 15 GHz: ≤ 1.105; 15 - 30 GHz: ≤ 1.152 30 - 40 GHz: ≤ 1.222	

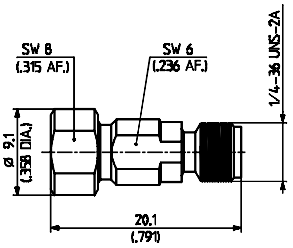

273

	H+S type	**31_SK-SMPX-50-3/199_NE**
	Item no.	**23021818**
SK	**jack (f)**	
SMPX	**jack (f)**	
Packaging	single	
Material:		
SK	stainless steel	
SMPX	stainless steel	
Note:	**smooth bore**	
VSWR:	DC - 15 GHz: ≤ 1.105; 15 - 30 GHz: ≤ 1.152 30 - 40 GHz: ≤ 1.222	

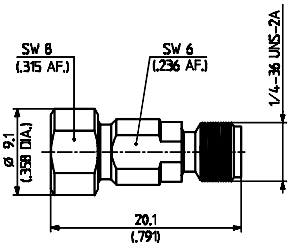

274

	H+S type	**33_SK-SMPX-50-1/199_NE**
	Item no.	**23021753**
SK	**plug (m)**	
SMPX	**jack (f)**	
Packaging	single	
Material:		
SK	stainless steel	
SMPX	stainless steel	
smooth bore	**full detent**	
VSWR:	DC - 15 GHz: ≤ 1.105; 15 - 30 GHz: ≤ 1.152 30 - 40 GHz: ≤ 1.222	

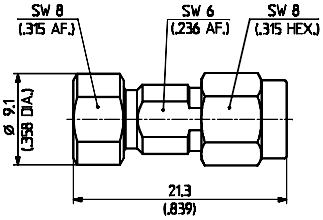

275

	H+S type	**33_SK-SMPX-50-2/199_NE**
	Item no.	**23021792**
SK	**plug (m)**	
SMPX	**jack (f)**	
Packaging	single	
Material:		
SK	stainless steel	
SMPX	stainless steel	
Note:	**limited detent**	
VSWR:	DC - 15 GHz: ≤ 1.105; 15 - 30 GHz: ≤ 1.152 30 - 40 GHz: ≤ 1.222	

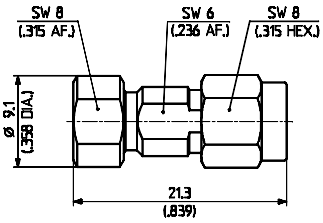

276

	H+S type	**33_SK-SMPX-50-3/199_NE**
	Item no.	**23021793**
SK	**plug (m)**	
SMPX	**jack (f)**	
Packaging	single	
Material:		
SK	stainless steel	
SMPX	stainless steel	
Note:	**smooth bore**	
VSWR:	DC - 15 GHz: ≤ 1.105; 15 - 30 GHz: ≤ 1.152 30 - 40 GHz: ≤ 1.222	

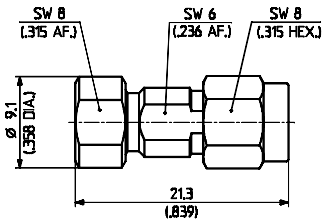

277

	H+S type	**33_SMPX-SK-50-1/199_NE**
	Item no.	**23032847**
SMPX	**plug (m)**	
SK	**jack (f)**	
Packaging	single	
Material:		
SMPX	stainless steel	
SK	stainless steel	
VSWR:	DC - 12 GHz: ≤ 1.05; 12 - 40 GHz: ≤ 1.2	

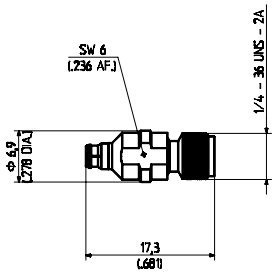

Material and plating descriptions may refer to the connector housing or outer contact.

SUCO* = SUCOPLATE®
SUPR** = SUCOPRO

QUICK-MATE ADAPTORS

300

300	**H+S type** **Item no.**	**33_N-Q50-0-14/13-_NE** **23003160**
N	**plug (m)** **jack (f)**	
Packaging	single	
Material:	brass/SUCO*	
VSWR:	DC - 4 GHz: ≤ 1.12; 4 - 8 GHz: ≤ 1.22	

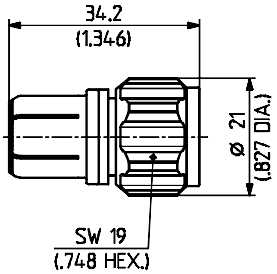

303

303	**H+S type** **Item no.**	**33_716-N-Q50-4/133_UE** **23000487**
7/16 **N**	**plug (m)** **jack (f)**	
Packaging	single	
Material: 7/16 N	 brass/SUCO* brass/SUCO*	
VSWR:	DC - 4 GHz: ≤ 1.05; 4 - 7.5 GHz: ≤ 1.15	

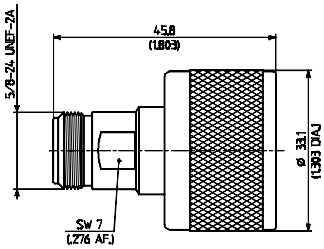

301

301	**H+S type** **Item no.**	**33_N-Q50-0-4/133_NE** **22660297**
N	**plug (m)** **jack (f)**	
Packaging	single	
Material:	brass/SUCO*	
VSWR:	DC - 5 GHz: ≤ 1.07; 5 - 8 GHz: ≤ 1.22 8 - 11 GHz: ≤ 1.28	

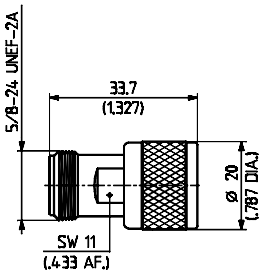

304

304	**H+S type** **Item no.**	**33_SMA-Q50-0-4/1-9_NE** **22660213**
SMA	**plug (m)** **jack (f)**	
Packaging	single	
Material:	CuBe/SUPR**	
VSWR:	DC - 5 GHz: ≤ 1.07; 5 - 16 GHz: ≤ 1.22 16 - 18 GHz: ≤ 1.28	

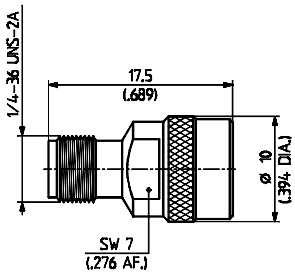

302

302	**H+S type** **Item no.**	**31_716-N-Q50-1/1-3_NE** **23008294**
7/16 **N**	**jack (f)** **jack (f)**	
Packaging	single	
Material: 7/16 N	 brass/SUCO* brass/SUCO*	
VSWR:	DC - 4 GHz: ≤ 1.05 4 - 7.5 GHz: ≤ 1.17	

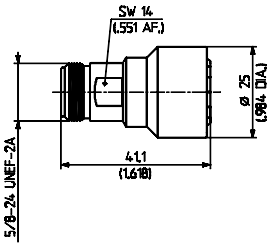

305

305	**H+S type** **Item no.**	**33_BNC-N-Q50-4/133_NE** **23003163**
BNC **N**	**plug (m)** **jack (f)**	
Packaging	single	
Material: BNC N	 brass/SUCO* brass/SUCO*	
VSWR:	DC - 4 GHz: ≤ 1.07	

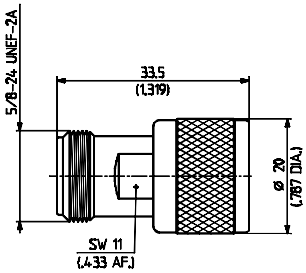

Material and plating descriptions may refer to the connector housing or outer contact.

SUCO* = SUCOPLATE®
SUPR** = SUCOPRO

306

H+S type	**32_N-PC7-Q50-4/1-_NE**	
Item no.	**23003162**	
N	**plug (m)**	
PC7		
Packaging	single	
Material:		
N	brass/SUPR**	
PC7	brass/SUPR**	
VSWR:	DC - 4 GHz: ≤ 1.07; 4 - 8 GHz: ≤ 1.18 8 - 11 GHz: ≤ 1.22	

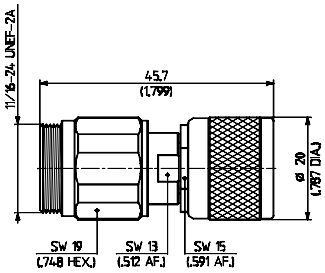

307

H+S type	**33_PC7-N-Q50-4/1-_NE**	
Item no.	**23003161**	
PC7		
N	**jack (f)**	
Packaging	single	
Material:		
PC7	brass/SUPR**	
N	brass/SUPR**	
VSWR:	DC - 4 GHz: ≤ 1.07; 4 - 18 GHz: ≤ 1.22	

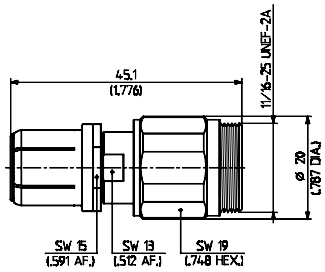

308

H+S type	**33_SMA-N-Q50-4/1-3_NE**	
Item no.	**22660211**	
SMA	**plug (m)**	
N	**jack (f)**	
Packaging	single	
Material:		
SMA	CuBe/SUPR**	
N	brass/SUCO*	
VSWR:	DC - 6 GHz: ≤ 1.07; 6 - 12.4 GHz: ≤ 1.18	

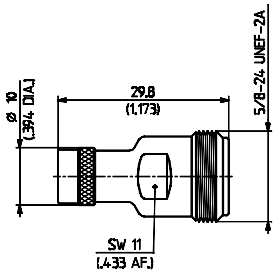

309

H+S type	**33_TNC-N-Q50-4/133_NE**	
Item no.	**22660360**	
TNC	**plug (m)**	
N	**jack (f)**	
Packaging	single	
Material:		
TNC	brass/SUCO*	
N	brass/SUCO*	
VSWR:	DC - 4 GHz: ≤ 1.065; 4 - 8 GHz: ≤ 1.12 8 - 11 GHz: ≤ 1.28	

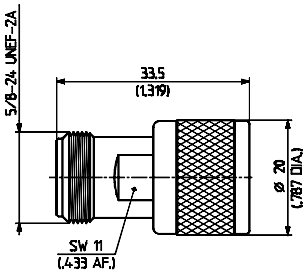

Material and plating descriptions may refer to the connector housing or outer contact.

SUCO* = SUCOPLATE®
SUPR** = SUCOPRO

PIM ADAPTORS

400

400	**H+S type** **Item no.**	**31_4195-716-50-1/133_WE** **22658138**

41/95 **jack (f)**
7/16 **jack (f)**

Packaging single

Material:
41/95 brass/SUCO*
7/16 brass/SUCO*

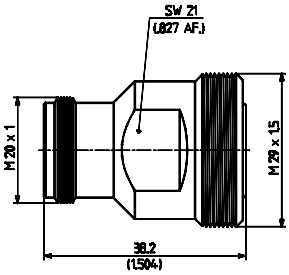

Intermodulation: ≥ -165 dBc

401

401	**H+S type** **Item no.**	**32_4195-716-50-1/133_WE** **22658131**

41/95 **plug (m)**
7/16 **plug (m)**

Packaging single

Material:
41/95 brass/SUCO*
7/16 brass/SUCO*

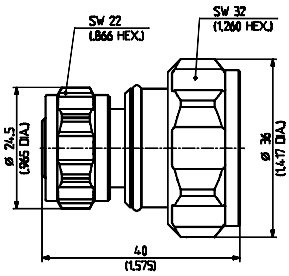

Intermodulation: ≥ -165 dBc

402

402	**H+S type** **Item no.**	**31_716-50-0-2/133_WE** **22658136**

7/16 **jack (f)**
7/16 **jack (f)**

Packaging single

Material: brass/SUCO*

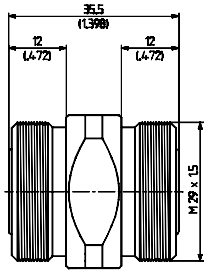

Intermodulation: ≥ -165 dBc

403

403	**H+S type** **Item no.**	**31_N-716-50-2/133_WE** **22658137**

N **jack (f)**
7/16 **jack (f)**

Packaging single

Material:
N brass/SUCO*
7/16 brass/SUCO*

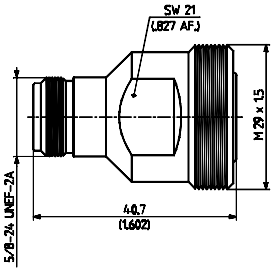

Intermodulation: ≥ -165 dBc

404

404	**H+S type** **Item no.**	**32_716-50-0-2/133_WE** **22658141**

7/16 **plug (m)**
7/16 **plug (m)**

Packaging single

Material: brass/SUCO*

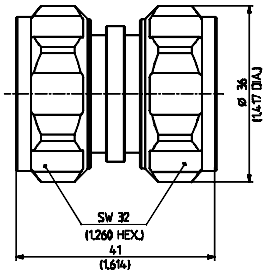

Intermodulation: ≥ -165 dBc

405

405	**H+S type** **Item no.**	**32_N-716-50-2/133_WE** **22658140**

N **plug (m)**
7/16 **plug (m)**

Packaging single

Material:
N brass/SUCO*
7/16 brass/SUCO*

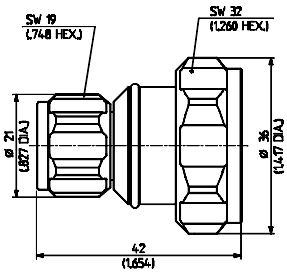

Intermodulation: ≥ -165 dBc

406

406	**H+S type** **Item no.**	**33_716-50-0-2/133_WE** **22658193**

7/16 **plug (m)**
7/16 **jack (f)**

Packaging single

Material: brass/SUCO*

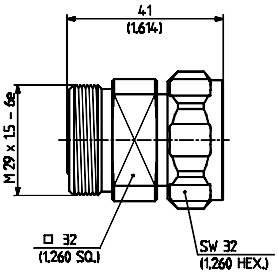

Intermodulation: ≥ -165 dBc

407

407	**H+S type** **Item no.**	**33_716-N-50-3/133_WE** **22658823**

7/16 **plug (m)**
N **jack (f)**

Packaging single

Material:
7/16 brass/SUCO*
N brass/SUCO*

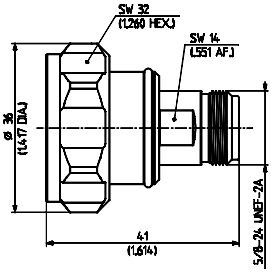

Intermodulation: ≥ -165 dBc

Material and plating descriptions may refer to the connector housing or outer contact.

SUCO* = SUCOPLATE®

408

408	**H+S type** **Item no.**	**33_N-716-50-3/133_WE** **22658217**

N	**plug (m)**
7/16	**jack (f)**
Packaging	single
Material:	
N	brass/SUCO*
7/16	brass/SUCO*

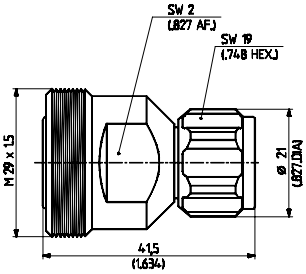

Intermodulation: ≥ –165 dBc

409

409	**H+S type** **Item no.**	**31_PC35-716-50-1/133_WE** **22658135**

PC3.5	**jack (f)**
7/16	**jack (f)**
Packaging	single
Material:	
PC3.5	brass/SUCO*
7/16	brass/SUCO*

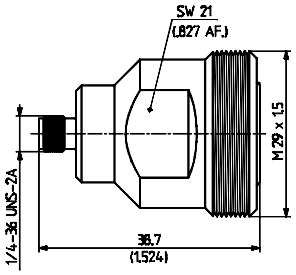

Intermodulation: ≥ –160 dBc

410

410	**H+S type** **Item no.**	**32_PC35-716-50-1/133_WE** **22658143**

PC3.5	**plug (m)**
7/16	**plug (m)**
Packaging	single
Material:	
PC3.5	brass/SUCO*
7/16	brass/SUCO*

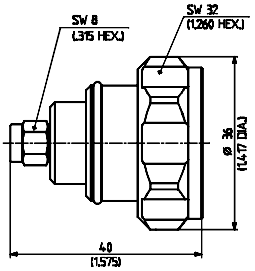

Intermodulation: ≥ –160 dBc

411

411	**H+S type** **Item no.**	**33_716-PC35-50-1/133_WE** **22658821**

7/16	**plug (m)**
PC3.5	**jack (f)**
Packaging	single
Material:	
7/16	brass/SUCO*
PC3.5	brass/SUCO*

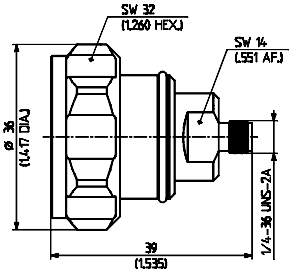

Intermodulation: ≥ –165 dBc

412

412	**H+S type** **Item no.**	**31_QN-716-50-1/113_WE** **23033269**

QN	**jack (f)**
7/16	**jack (f)**
Packaging	single
Material:	
QN	brass/SUCO*
7/16	brass/SUCO*

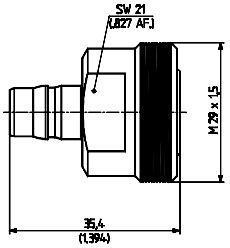

Intermodulation: ≥ –165 dBc

413

413	**H+S type** **Item no.**	**32_QN-716-50-1/113_WE** **23033643**

QN	**plug (m)**
7/16	**plug (m)**
Packaging	single
Material:	
QN	brass/SUCO*
7/16	brass/SUCO*

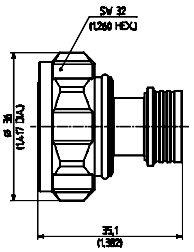

Intermodulation: ≥ –165 dBc

414

414	**H+S type** **Item no.**	**33_QN-716-50-1/113_WE** **23033550**

QN	**plug (m)**
7/16	**jack (f)**
Packaging	single
Material:	
QN	brass/SUCO*
7/16	brass/SUCO*

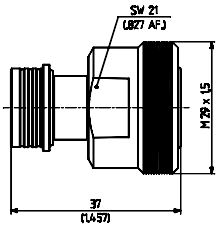

Intermodulation: ≥ –165 dBc

415

415	**H+S type** **Item no.**	**33_716-QN-50-1/113_WE** **23033644**

7/16	**plug (m)**
QN	**jack (f)**
Packaging	single
Material:	
716	brass/SUCO*
QN	brass/SUCO*

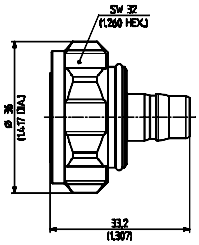

Intermodulation: ≥ –165 dBc

Adapt.

Material and plating descriptions may refer to the connector housing or outer contact.

SUCO* = SUCOPLATE®

416

416	**H+S type** **Item no.**	**31_TNC-716-50-1/133_WE** **22658134**

TNC	**jack (f)**
7/16	**jack (f)**
Packaging	single
Material:	
TNC	brass/SUCO*
7/16	brass/SUCO*
Intermodulation:	≥ –165 dBc

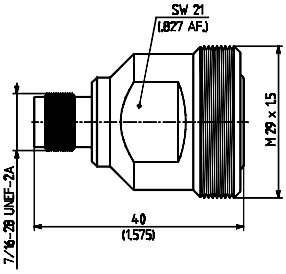

417

417	**H+S type** **Item no.**	**32_TNC-716-50-1/133_WE** **22658142**

TNC	**plug (m)**
7/16	**plug (m)**
Packaging	single
Material:	
TNC	brass/SUCO*
7/16	brass/SUCO*
Intermodulation:	≥ –165 dBc

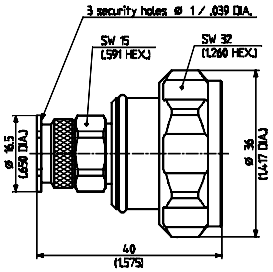

418

418	**H+S type** **Item no.**	**33_716-TNC-50-1/133_WE** **22658824**

7/16	**plug (m)**
TNC	**jack (f)**
Packaging	single
Material:	
7/16	brass/SUCO*
TNC	brass/SUCO*
Intermodulation:	≥ –165 dBc

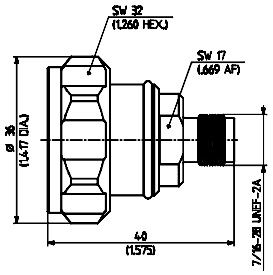

Material and plating descriptions may refer to the connector housing or outer contact.

SUCO* = SUCOPLATE®

ASSEMBLY TOOLS

CONTENTS

PAGE

CRIMPING TOOLS AND INSERTS FOR FLEXIBLE CABLES

small crimp tool with fixed inserts

H+S type	Item no.	Size	Colour code	Square-section (centre contact)	Hexagonal section (outer contact)
75_Z-0-3-4	**22544613**	2B	orange	1.6 mm / .063 *in.*	5.5 mm / .217 *in.*
75_Z-0-4-4	**22544612**	2C	yellow	1.6 mm / .063 *in.*	6.5 mm / .256 *in.*

small crimp tool with interchangeable inserts 1/2A, 2B, 2C

Fig. 1

Fig. 2

H+S type	Item no.	Description	Fig.
75_Z-0-0-50	**22544754**	tool without inserts	1
75_Z-0-0-51	**22544755**	tool with various inserts in wooden box (1/2A, 2B, 2C)	2

interchangeable inserts for small crimp tool

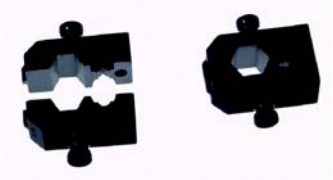

H+S type	Item no.	Size	Square-section (centre contact)	Hexagonal section (outer contact)
76_Z-0-1-1	**23000884**	0.54/A	0.54 mm / .021 *in.*	3.3 mm / .130 *in.*
76_Z-0-2-20	**22645153**	1/4.95	0.7 mm / .028 *in.*	4.95 mm / .195 *in.*
76_Z-0-2-51	**22544756**	1/2A	0.7/1.6 mm / .028/.063 *in.*	3.3 mm / .130 *in.*
76_Z-0-2-53	**22645337**	1/2.67	0.7 mm / .028 *in.*	2.7 mm / .106 *in.*
76_Z-0-3-51	**22544757**	2B	1.6 mm / .063 *in.*	5.5 mm / .217 *in.*
76_Z-0-4-51	**22544758**	2C	1.6 mm / .063 *in.*	6.5 mm / .256 *in.*

large crimp tool with interchangeable inserts 1/2A, 2B, 2C, 3D

Fig. 1

Fig. 2

H+S type	Item no.	Description	Fig.
75_Z-0-0-1	**22543157**	tool without inserts	1
76_Z-0-0-15	**22543177**	tool with various inserts in wooden box (1/2A, 2B, 2C, 3D)	2

TOOL BOXES

H+S type	Item no.	Description
76_Z-0-0-9	**22644671**	large tool box (empty)
76_Z-0-0-11	**22543175**	large tool box without tooling but including foam insert for tools and allen key

table press with interchangeable inserts

H+S type	Item no.	Description
75_Z-0-0-2	**22543158**	press without inserts (for inserts see next page)

interchangeable inserts fitting large crimp tool and table press

H+S type	Item no.	Size	Colour code	Square-section (centre contact)	Hexagonal section (outer contact)
76_Z-0-1-2	**23000885**	0.54/A		0.54 mm/.021 in.	3.30 mm / .130 in.
76_Z-0-2-1	**22543181**	1/2 A	red	0.7/1.6 mm/.028/.063 in.	3.30 mm / .130 in.
76_Z-0-2-8	**22544191**	1/4.95		0.7 mm / .028 in.	4.95 mm / .195 in.
76_Z-0-3-1	**22543185**	2 B	orange	1.6 mm / .063 in.	5.50 mm / .217 in.
76_Z-0-3-9	**22641133**	B 1.22/1.22		1.2 mm / .047 in.	5.50 mm / .217 in.
76_Z-0-4-1	**22543189**	2 C	yellow	1.6 mm / .063 in.	6.50 mm / .256 in.
76_Z-0-4-8	**22543190**	C 1.22/1.22		1.2 mm / .047 in.	6.50 mm / .256 in.
76_Z-0-5-8	**22543192**	8/1.22/1.22		1.2 mm / .047 in.	8.00 mm / .315 in.
76_Z-0-5-21	**22543193**	2/8.0		1.6 mm / .063 in.	8.00 mm / .315 in.
76_Z-0-6-1	**22649051**	3/8.65		2.4 mm / .094 in.	8.65 mm / .341 in.
76_Z-0-6-21	**22543194**	2/9.75		1.6 mm / .063 in.	9.80 mm / .386 in.
76_Z-0-7-1	**22543195**	3 D	violet	2.4 mm / .094 in.	10.70 mm / .421 in.
76_Z-0-7-7	**22543196**	2 D		1.6 mm / .063 in.	10.70 mm / .421 in.
76_Z-0-7-8	**22660322**	2.5/D		2.5 mm / .098 in.	10.70 mm / .421 in.
76_Z-0-7-14	**22544524**	4 D		3.3 mm / .130 in.	10.70 mm / .421 in.
76_Z-0-10-14	**23002630**	12.4		–	12.40 mm / .488 in.
76_Z-0-0-26	**22645880**	1/2.67		0.7 mm / .028 in.	2.70 mm / .106 in.

special inserts and tools for large crimp tool and table press

H+S type	Item no.	Description
76_Z-0-0-1	**22543170**	cutting insert for cables up to 12 mm/4.72 in. outer diameter
76_Z-0-0-2	**22543172**	spare bladers for cutting insert (10 pieces per package)
76_Z-0-0-3	**22543173**	support plate for bench mounting of large crimp tool

TOOL SETS FOR SEMI-RIGID CABLE ASSEMBLING (SOLDER TYPE)

The tool sets include a solid wooden storage case. The composition of these sets is as indicated in the list of tools.

H+S type	Item no.	Series	Description
74_Z-0-0-70	**22544725**	SMA	includes all tools required for economic and reliable assembling of SMA connectors
74_Z-0-0-71	**22641350**	N	includes all tools required for assembling of N connectors to semi-rigid cables
74_Z-0-0-72	**22544747**	SMA	includes only the minimum of tools required for assembling of SMA connectors

SELECTION OF COMMON AND HELPFUL ASSEMBLY TOOLS

H+S type	Item no.	W-no.	for series	Description	Tool set 74 Z-0-0-			
					70	71	72	
74_Z-0-0-10	**22543120**	W10		"Soldomat" soldering device for center contacts				
74_Z-0-0-14	**22543124**	W14	SMA	locator tools for contact and insulators	●		●	
74_Z-0-0-21	**22543130**	W21	SMA	torque wrench 1 Nm	●			
74_Z-0-0-24	**22543133**		SMA	tap drill for SMA (1/4-36 UNS-2B thread)				
74_Z-0-0-29	**22543138**	W29	N	dielectric insertion tool for insulators series N		●		

H+S type	Item no.	W-no.	for series	Description	Tool set 74 Z-0-0- 70	71	72	
74_Z-0-0-35	**22544282**	W35	N	soldering gauge 0.45 mm / *.018 in.*		●		
74_Z-0-0-52	**22544553**	W52	SMA	dielectric insertion tool for SMA-plugs	●		●	
74_Z-0-0-53	**22544554**	W53	SMA	dielectric insertion tool for SMA-jacks	●		●	
74_Z-0-0-54	**22544555**	W54	SMA	contact holder for pins and sockets	●		●	
74_Z-0-0-55	**22544516**	W55	SMA	soldering gauge 0.25 mm / *.010 in.*	●		●	
74_Z-0-0-56	**22544517**	W56	SMA	soldering gauge 0.4 mm / *.016 in.*	●		●	
74_Z-0-0-58	**22544557**	W58	BMA, SK, N SMA	soldering fixture (works with W374)	●	●	●	
74_Z-0-0-59	**22544558**	W59	BMA N SMA	inserts for EZ 141 (works with W58 and W442)	●	●	●	
74_Z-0-0-60	**22544559**	W60	BMA N SMA	inserts for EZ 86 (works with W58 and W442)	●	●	●	
74_Z-0-0-61	**22544560**	W61	SMA	locator tool (works with W58 and W442)				
74_Z-0-0-62	**22544561**	W62	SMA	locator tool for SMA-plugs without pin (works with W58 and W442)				
74_Z-0-0-63	**22544562**	W63	SMA	trim tool for SMA-plugs without pin	●			
74_Z-0-0-66	**22544616**	W66	N	locator tool (works with W58 and W442)		●		
74_Z-0-0-67	**22544640**	W67	N	contact holder for pins and sockets series N		●		

H+S type	Item no.	W-no.	for series	Description	Tool set 74 Z-0-0- 70	71	72	
74_Z-0-0-68	**22544715**	W68	BMA SK, N SMA	1 set of blades with protector	●	●	●	
74_Z-0-0-73	**22544688**	W73		adaptor				
74_Z-0-0-75	**22544807**	W75	SK SMA	assembly tool for hermetic jacks				
74_Z-0-0-81	**22641423**		SK SMA	positioner for assembly of coupling nuts	●	●		
74_Z-0-0-142	**22643462**	W142	SMA	rebore tool	●		●	
74_Z-0-0-157	**22643029**	W157	BMA SK, N SMA	cable stripping jig for EZ 47, EZ 86, EZ 141, SUCOFORM 86 and 141	●	●	●	
74_Z-0-0-160	**22643514**			replacement cutting wheels; set for EZ 47, EZ 86, EZ 141 (works with W157)	●	●	●	
74_Z-0-0-164	**22643028**	W164	BMA N SMA	trim tool for centre contacts	●	●		
74_Z-0-0-196 **74_Z-0-0-197** **74_Z-0-0-198**	**22645359** **22645360** **22645361**			replacement support cover for EZ 47 EZ 86 EZ 141 (works with W 157)				
74_Z-0-0-207 **74_Z-0-0-208**	**22645363** **22645362**			replacement cutting weels for EZ 47 EZ 86 EZ 141 (works with W157)				
74_Z-0-0-209	**22645585**	W209	BMA	locator tool used with W58 and W442 (for BMA plug)				
74_Z-0-0-210	**22645586**	W210	BMA	locator tool used with W58 and W442 (for BMA jack)				
74_Z-0-0-213	**22645593**	W213	BMA	removal tool for receptacles with snap-in mechanism				
74_Z-0-0-231	**22646131**	W231	SK	locator tool for SK-plugs (works with W58 and W442)				

H+S type	Item no.	W-no.	for series	Description	Tool set 74 Z-0-0-			
					70	71	72	
74_Z-0-0-232	**22646132**	W232	SK	locator tool for SK-jacks (works with W58 and W442)				
74_Z-0-0-233	**22646133**	W233	SK	inserts for semi-rigid cable EZ 118 (works with W58 and W442)				
74_Z-0-0-234	**22646134**	W234	SK	replacement cutting wheels for EZ 118 (works with W157)				
74_Z-0-0-246	**22646873**	W246	SMA	jacket remover for semi-rigid and Suco-form cables. After cutting and breaking of jacket with tool W-157, remove separated piece with tool W-246.				
74_Z-0-0-264	**22646290**	W264	SK	trim tool for centre conductor of semi-rigid cable EZ 118				
74_Z-0-0-265	**22646291**	W265	SK	spare blade for W264				
74_Z-0-0-270	**22648901**	W270	1.0/ 2.3	removal tool for 1.0/2.3 inserts				
74_Z-0-0-368	**23021264**	W368	SMA	locator tool for SMA female (works with W58 and W442)	●		●	
74_Z-0-0-369	**23021266**	W369	SMA	locator tool for SMA male (works with W58 and W442)	●		●	
74_Z-0-0-374	**23022146**	W374	BMA SK SMA N	support for soldering fixture (works with W58 and W442)				

H+S type	Item no.	W-no.	for series	Description	Tool set 74 Z-0-0-			
					70	71	72	
74_Z-0-0-375	**23022145**	W375	BMA SK SMA N	soldering fixture for centre contacts (works with W374)				
74_Z-0-0-441	**23024586**	W441	BMA SK SMA N	collecting tank for coolant or flux (works with W374)				
74_Z-0-0-442	**23024588**	W442	BMA SK SMA N	soldering fixture (works with W374)				
74_Z-0-0-443	**23024584**	W443	BMA SK SMA N	for positioning locator tools (works with W442)				
74_Z-0-3-2	**22543148**	W3-2	SMA N	stripping gauge for insulation EZ 141	●	●		
74_Z-0-3-4	**22543150**	W3-4	N	trim tool for EZ 141		●		

ASSEMBLY TOOLS FOR BMA CONNECTORS WITH HERMETIC SEAL

H+S type	Item no.	W-no.	Description	
74_Z-0-0-211	**22645591**		soldering fixture for hermetic seal (12_BMA-50-0-3 and 22_BMA-50-0-3)	
74_Z-0-0-214	**22645579**		torque wrench (box spanner) torque 2.00 Nm, 8 mm hex.	
74_Z-0-0-215	**22645580**		screw driver for 12_BMA-50-0-3 to use with 74_Z-0-0-214	

ASSEMBLY TOOLS FOR SK CONNECTORS

H+S type	Item no.	W-no.	Description	
74_Z-0-0-226	**22646136**	W226	soldering fixture for glass bead	
74_Z-0-0-227	**22646137**	W227	soldering fixture for glass bead	
74_Z-0-0-228	**22646138**	W228	assembling tool for dielectric bead	
74_Z-0-0-230	**22646130**	W230	step drill (only if sliding contacts are not used)	
74_Z-0-0-235	**22646135**	W235	step drill (only if sliding contacts are used)	

SPANNERS

H+S type	Item no.	Opening
74_Z-0-0-1	**22543111**	3/8″
74_Z-0-0-2	**22543112**	11.0 mm / *.433 in.*
74_Z-0-0-3	**22543113**	16.0 mm / *.630 in.*
74_Z-0-0-16	**22543126**	8.0 mm / *.315 in.*
74_Z-0-0-17	**22644234**	1/4″ (6.35 mm / *.250 in.*)
74_Z-0-0-18	**22543127**	9.0 mm / *.354 in.*
74_Z-0-0-19	**22543128**	5.5 mm / *.217 in.*
74_Z-0-0-37	**22543732**	13.0 mm / *.512 in.*
74_Z-0-0-38	**22543733**	7.0 mm / *.276 in.*

TORQUE WRENCHES

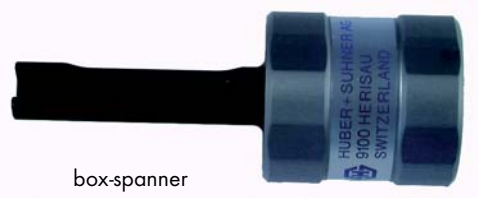

box-spanner


torque wrench (standard style)

H+S type	Item no.	for series	Torque	Opening	Notes
74_Z-0-0-21	**22543130**	SMA / PC 3.5	1.00 Nm	8.0 mm/*.315 in*	standard style
74_Z-0-0-45	**22544232**	SMC	0.35 Nm	6.0 mm/*.236 in.*	standard style
74_Z-0-0-77	**22544820**	SMA	1.00 Nm	8.0 mm/*.315 in.*	box-spanner
74_Z-0-0-78	**22641379**	SMA economic	0.45 Nm	8.0 mm/*.315 in.*	box-spanner
74_Z-0-0-79	**22642374**	SMA economic	0.45 Nm	8.0 mm/*.315 in.*	standard style
74_Z-0-0-80	**22544821**	SMA hermetic	1.95 Nm	7.0 mm/*.276 in.*	standard style
74_Z-0-0-147	**22644235**	SMC	0.35 Nm	6.0 mm/*.236 in.*	box-spanner
74_Z-0-0-174	**22643898**	SK	1.30 Nm	8.0 mm/*.315 in.*	standard style
74_Z-0-0-189	**22644368**	SK hermetic	2.00 Nm	8.0 mm/*.315 in.*	standard style
74_Z-0-0-192	**22645084**	TNC	1.00 Nm	15.0 mm/*.591 in.*	standard style
74_Z-0-0-193	**22645085**	N	1.00 Nm	20.0 mm/*.787 in.*	standard style
74_Z-0-0-321	**22651994**	N	1.00 Nm	19.0 mm/*.748 in.*	standard style
74_Z-0-0-373	**23021864**	TNC	1.00 Nm	14.0 mm/*.551 in.*	standard style

COMBINATION TOOL FOR MMBX/MMCX/MCX-RIGHT ANGLE CONNECTORS

for protective cap mounting and decoupling

H+S type	Item no.	Description
74_Z-0-0-30	**22543139**	assembly tool for 16_MCX and MMBX right angle connectors (decoupling and cap mounting)
74_Z-0-0-225	**22645861**	16_MMCX-50-1-1, 16_MMCX-50-1-2, 16_MMCX-50-2-1 (decoupling and cap mounting)
74_Z-0-0-272	**22648614**	all 11_MMCX- and 16_MMCX-connectors (decoupling and cap mounting)
74_Z-0-0-276	**22648710**	decoupling tool for bulkhead jacks (MCX 75 Ω)
74_Z-0-0-350	**23004135**	removal tool (16_MMCX)

SPECIAL TOOLS FOR QMA CONNECTORS

decoupling tool for high density applications

H+S type	Item no.	W-no.	Description
74_Z-0-0-459	**84032400**	W459	decoupling tool for high density application (for QMA and QN)

assembly tool

H+S type	Item no.	W-no.	for series	Description
74_Z-0-0-360	**23023444**	W360	QMA	locator tools for QMA connectors (suitable for semi-rigid cables)

SPECIAL TOOLS FOR QN CONNECTORS

decoupling tool

H+S type	Item no.	W-no.	for series	Description
74_Z-0-0-459	**84032400**	W459	QN / QMA	decoupling tool for high density application

locator tool

H+S type	Item no.	W-no.	for series	Description
74_Z-0-0-390	**23035218**	W390	QN	locator tool for 11 QN and 16 QN connectors (works with W58 and W442)

locator tool

H+S type	Item no.	W-no.	for series	Description
74_Z-0-0-391	**23035220**	W391	QN	locator tool for 24 QN connectors (works with W58 and W442)

decoupling tool for MMPX

H+S type	Item no.	W-no.	for series	Description
74_Z-0-0-555_—_E	**84020011**	W555	MMPX	decoupling tool (distance washers included)
74_Z-0-0-556_—_E	**84031617**	W556	MMPX	distance washers (for replacement)

TAP DRILL

H+S type	Item no.	Thread
74_Z-0-0-24	**22543133**	1/4-36 UNS-2B
74_Z-0-0-82	**22643835**	3/8-32 UNEF-2B
74_Z-0-0-229	**22646139**	1/4-36 UNS (for blind hole threads)
74_Z-0-0-236	**22646069**	2-56 UNC
74_Z-0-0-237	**22646070**	10-56 UNS
74_Z-0-0-238	**22646071**	5/8-24 UNEF

VARIOUS TOOLS

H+S type	Item no.	Description
74_Z-0-0-12	**22642718**	small saw
74_Z-0-0-13	**22644241**	replacement saw blade for 74 Z-0-0-12
74_Z-0-0-25	**22543134**	face spanner for fastening nut (22 + 24 QLA)
74_Z-0-0-89	**22644721**	screw driver for female centre contacts (Series 7/16)
74_Z-0-0-115	**22642492**	syringe for casting compound
74_Z-0-0-116	**22642493**	casting compound (resin 6.75 cm^3 and accelerator 3.0 cm^3), 2 containers
74_Z-0-0-177	**22644541**	cover insertion tool for 16 SMB/C/S connectors

TOOLS FOR HUBER+SUHNER QUICK-FIT® CONNECTORS

cable stripping tools for easy cable preparation in one single operation (can be used manually or with electrical power tool)

H+S type	Item no.	Cable type	Assembly instructions
74_Z-0-8-15	**23000296**	3/8": Andrew LDF 2–50	0000180713
74_Z-0-9-15	**23001006**	1/2" Highflex: SUCOFEED®, Andrew, NK cables, RFS (Kabelmetal)	0000179418/ 0000201603
74_Z-0-12-15	**23000319**	1/2": SUCOFEED®, Andrew, NK cables, RFS (Kabelmetal)	0000179113
74_Z-0-23-16	**23007928**	7/8": SUCOFEED®, Andrew, NK cables, RFS (Kabelmetal) 7/8" Highflex: SUCOFEED®, Andrew	0000180164/ 0000201645 0000233737
74_Z-0-23-17	**84017918**	7/8" Low attenuation: SUCOFEED®, Andrew	0000243692/0000236366
74_Z-0-32-14	**23010533**	1 $^{1}/_{4}$": SUCOFEED®, Andrew, NK cables, RFS (Kabelmetal)	0000179128
74_Z-0-42-14	**23010534**	1 $^{5}/_{8}$": SUCOFEED®, Andrew, NK cables, RFS (Kabelmetal)	0000179128

HUBER+SUHNER® QUICK-FIT installation kit

Tool kit for all QUICK-FIT Connectors
(with additional space for other auxiliary tools and spare parts)

Stripping tools can be accomodated but are not included

H+S type	Item no.	Description	Content	Size
74_Z-0-0-600	**23002174**	tool box	all tools of the following table marked with *	620 × 430 × 140 mm/ *24.4 × 17 × 1.5 in.*

Overview necessary tools for the assembly of QUICK-FIT connectors

H+S type	Item no.	Part description	Corrugated copper tube cables							
			3/8" LFD 2-50	1/2" HF	1/2"	7/8"	7/8" HF	7/8" LA	1 1/4"	1 5/8"
74_Z-0-8-15	**23000296**	stripping tool (3/8" LFD 2-50)	X							
74_Z-0-9-15	**23001006**	stripping tool (1/2" HF)		X						
74_Z-0-12-15	**23000319**	stripping tool (1/2")			X					
74_Z-0-23-16	**23007928**	stripping tool (7/8" + 7/8" HF)				optional	optional			
74_Z-0-23-17	**84017918**	stripping tool (7/8" LA)						optional		
74_Z-0-32-14	**23010533**	stripping tool (1_1/4")							optional	
74_Z-0-42-14	**23010534**	stripping tool (1_5/8")								optional
74_Z-0-0-359	**23014976**	handle (for stripping tools)	X[4)]	X[4)]	X[4)]	optional	optional	optional	optional	optional
74_Z-0-0-402	**22652193**	* abrasive paper 320	X	X	X					
74_Z-0-0-424	**23001952**	* spanner AF 17 mm	X							
74_Z-0-0-425	**23001953**	* spanner AF 18 mm	X							
74_Z-0-0-426	**23001954**	* spanner AF 19 mm	X							
74_Z-0-0-427	**23001955**	* spanner AF 21 mm	X	X						
74_Z-0-0-428	**23001956**	* spanner AF 22 mm		X	X					
74_Z-0-0-429	**23001957**	* spanner AF 24 mm			X					
74_Z-0-0-430	**23001958**	* spanner AF 30 mm				X	X	X		
74_Z-0-0-431	**23001959**	* spanner AF 36 mm				X	X	X		
74_Z-0-0-415	**22652206**	* counter sink				X[1)]	X[1)]	X[1)]	X[1)]	X[1)]
74_Z-0-0-418	**22652209**	* Stanley knife	X	X	X	X	X	X	X	X
74_Z-0-0-420	**22652211**	* steel brush			X	X	X	X	X	X
74_Z-0-0-422	**22652213**	* steel measure 200 mm	X[2)]	X[2)]	X[2)]	X[2)]	X[2)]	X[2)]	X[2)]	X[2)]
74_Z-0-0-432	**23002005**	* screw driver (2)	X		X					
74_Z-0-0-433	**23002007**	* screw driver (4)				X	X	X	X	X
74_Z-0-0-12	**22642718**	small metal saw	X	X	X	X	X	X	X	X
74_Z-0-0-434	**23002166**	monkey wrench [3)] (min.65mm)							X	X
		small file	X[2)]	X[2)]	X[2)]					

*** = tools included in the HUBER+SUHNER QUICK-FIT installation kit 74_Z-0-0-600, (can be ordered with item no. 23002174)**

1) for assembly use either the Stanley knife or the counter sink
2) only necessary without HUBER+SUHNER stripping tool
3) 2 wrenches are needed for assembling
4) handle included in QUICK-FIT stripping tool delivery

Spare parts for QUICK-FIT cable stripping tools

H+S type	Item no.	Description	Application	Function
74_Z-0-0-346	**23000936**	blade	74_Z-0-8-15 74_Z-0-8-16 74_Z-0–9-15 74_Z-0-12-15	stripping jacket
74_Z-0-0-347	**23000937**	blade	74_Z-0-8-15 74_Z-0-8-16 74_Z-0-12-15	cutting corrugated copper tube
74_Z-0-0-348	**23000938**	triangle knife	74_Z-0-8-15 74_Z-0-8-16 74_Z-0-9-15 74_Z-0-12-15	deburring inner conductor
74_Z-0-0-349	**23001008**	blade	74_Z-0-9-15	cutting corrugated copper tube
74_Z-0-0-297	**22650531**	blade	74_Z-0-23-16 74_Z-0-23-17	cutting corrugated copper, foam and inner conductor
74_Z-0-0-355	**23008264**	blade	74_Z-0-23-16 74_Z-0-32-14 74_Z-0-32-17	stripping jacket
74_Z-0-0-356	**23010537**	blade	74_Z-0-42-14	stripping jacket

Additional tools for HUBER+SUHNER® QUICK-FIT cable stripping tools

H+S type	Item no.	Tool description	Function
74_Z-0-0-416	**22652207**	* allen wrench AF 2.5 mm/*.098 in.*	spare blades for the stripping tools 74_Z-0-8-15, 74_Z-0-8-16, 74_Z-0-9-15, 74_Z-0-12-15, 74_Z-0-23-16, 74_Z-0-23-17, 74_Z-0-32-14 and 74_Z-0-42-14
74_Z-0-0-423	**23000311**	* allen wrench AF 4 mm/*.157 in.*	for removing the BIT adaptor
74_Z-0-0-421	**22652212**	* screwdriver, Torx 1 (Torx T7)	for changing the triangle knife 74_Z-0-0-348

*** = not included in the HUBER+SUHNER QUICK-FIT installation kit 74_Z-0-0-600**

A FURTHER HUBER+SUHNER PRODUCT!

RFID (Radio Frequency IDentification) antennas

Details on this product are to be found in the catalogue, Item no. 84035963. Get your copy free of charge at **www.hubersuhner.com.**

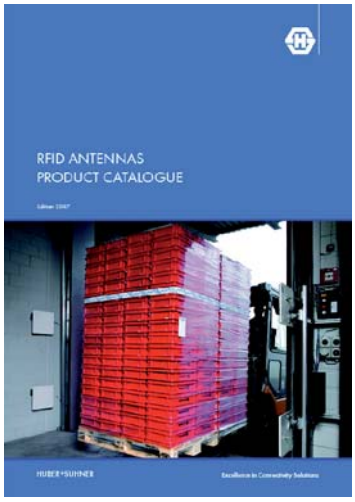

ACCESSORIES

CONTENTS

PAGE

CABLE TERMINATORS

Straight PCB cable terminators

> for flexible cables

> cable entry crimp

> 5.08 mm / .200 *in*. grid

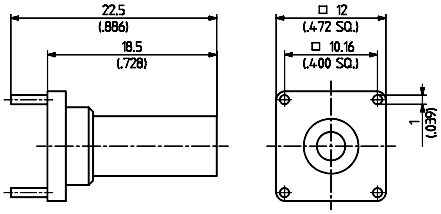

H+S type	Item no.	Cable group (example)	Packaging	Plating body	Assembly Instruction/ Mounting Hole	Crimp insert
83_CT-0-3-1/-23_-E	**23013153**	U7 (RG 58 C/U)	single	nickel	27407 / ML 49	B
83_CT-0-3-2/-23_-E	**23013154**	U9 (RG 223/U)	single	nickel	27407 / ML 49	B

Cable groups see page 28 | Assembly tools see page 385 | Mounting holes see page 412

> for flexible cables

> cable entry crimp

> 2.54 mm / *.100 in.* grid

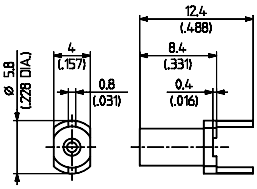

H+S type	Item no.	Cable group (example)	Packaging	Plating body	Assembly Instruction/ Mounting Hole	Crimp insert
83_CT-0-1-1/-11_NE	**23013158**	U1 (RG 178 B/U)	single	gold	27408 / ML 45	A
83_CT-0-2-1/-11_NE	**23013159**	U2 (RG 316/U)	single	gold	27408 / ML 45	A
83_CT-0-2-1/-11_NH	**23013160**	U2 (RG 316/U)	bulk 100 pcs.	gold	27408 / ML 45	A
83_CT-0-2-2/-11_NE	**23013161**	U4 (K 02252 D)	single	gold	27408 / ML 45	A

> for semi-rigid cables

> cable entry soldered

> 2.54 mm / *.100 in.* grid

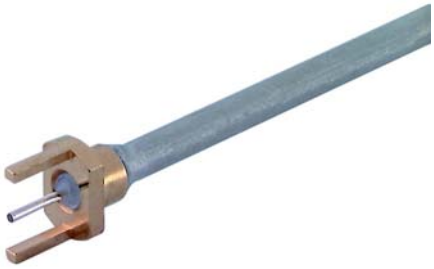

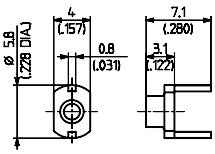

H+S type	Item no.	Cable group (example)	Packaging	Plating body	Assembly instruction/ Mounting hole
83_CT-0-2-4/-11_NE	**23013176**	Y3, Y11 (EZ 86)	single	gold	27410 / ML 45
83_CT-0-2-4/-11_NH	**23013177**	Y3, Y11 (EZ 86)	bulk 100 pcs.	gold	27410 / ML 45

> for flexible cables

> cable entry crimp

> 2.54 mm / *.100 in.* grid

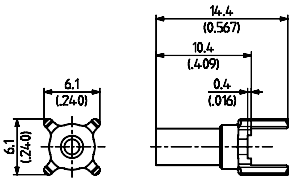

H+S type	Item no.	Cable group (example)	Packaging	Plating body	Assembly Instruction/ Mounting Hole	Crimp insert
83_CT-0-2-3/-11_NE	**23013192**	U2 (RG 316/U)	single	gold	27409 / ML 15	A

Cable groups see page 28 Assembly tools see page 385 Mounting holes see page 412

> for flexible cables

> cable entry soldered

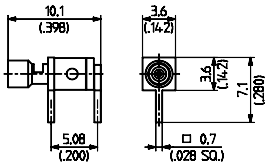

Fig. 1

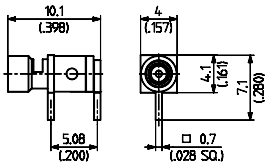

Fig. 2

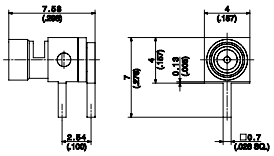

Fig. 3

H+S type	Item no.	Cable group (example)	Packaging	Plating body	Assembly Instruction/ Mounting Hole	Fig.
86_CT-0-1-1/111_NE	**23013202**	U1 (RG 178 B/U)	single	gold	27411 / ML 100	1
86_CT-0-1-1/111_NH	**23013203**	U1 (RG 178 B/U)	bulk 100 pcs.	gold	27411 / ML 100	1
86_CT-0-2-1/111_NH	**23013216**	U2 (RG 316/U)	bulk 100 pcs.	gold	27411 / ML 100	2
86_CT-0-2-5/111_NH	**23016926**	U2 (RG 316/U)	bulk 100 pcs.	gold	27432 / ML 164	3

> for flexible cables

> cable entry crimp

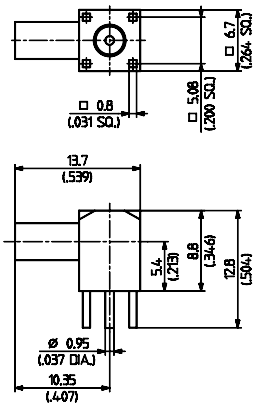

H+S type	Item no.	Cable group (example)	Packaging	Plating body	Assembly Instruction/ Mounting Hole	Crimp insert
86_CT-0-2-2/111_NE	**23013227**	U2 (RG 316/U)	single	gold	27412 / ML 15	A
86_CT-0-2-3/111_NE	**23013228**	U4 (K 02252 D)	single	gold	27412 / ML 15	A

Cable groups see page 28 Assembly tools see page 385 Mounting holes see page 412

TAPER SLEEVES AND SUITABLE ASSEMBLY TOOLS

Release spray is recommended for mounting (Acmos 70 - 2404, oil-less)

> for connectors with cable entry crimp
> made of EVA (ethylenevinylacetat)
> temperature resistant – 40°C – + 70°C / – 40 °F + 158 °F
> halogen free
> can be recycled

Cable group	U1	U2, U5, S5	U4, R8	U7, U8, U11, U12, U13 + RG142 B/U, EF 142		U16*, U17	
example	RG 196 A/U	RG 188 A/U RG 179 B/U	G 02232 D K 02252 D	RG 58 C/U	RG 223/U G 03233 D	RG 59 B/U	G 04233 D
colour black	**78_Z-0-1-1**	**78_Z-0-2-1**	**78_Z-0-2-3**	**78_Z-0-3-4**	**78_Z-0-3-5**	**78_Z-0-4-4**	**78_Z-0-4-5**
Item no.	**22544447**	**22544467**	**22544457**	**22544408**	**22641890**	**22544427**	**22641673**
brown	**78_Z-1-1-1**	**78_Z-1-2-1**	**78_Z-1-2-3**	**78_Z-1-3-4**	**78_Z-1-3-5**	**78_Z-1-4-4**	**78_Z-1-4-5**
Item no.	**22544448**	**22544468**	**22544458**	**22544416**	**22641664**	**22544436**	**22641674**
red	**78_Z-2-1-1**	**78_Z-2-2-1**	**78_Z-2-2-3**	**78_Z-2-3-4**	**78_Z-2-3-5**	**78_Z-2-4-4**	**78_Z-2-4-5**
Item no.	**22544449**	**22544469**	**22544459**	**22544415**	**22641665**	**22544435**	**22641675**
orange	**78_Z-3-1-1**	**78_Z-3-2-1**	**78_Z-3-2-3**	**78_Z-3-3-4**	**78_Z-3-3-5**	**78_Z-3-4-4**	**78_Z-3-4-5**
Item no.	**22544450**	**22544470**	**22544460**	**22544414**	**22641666**	**22544434**	**22641676**
yellow	**78_Z-4-1-1**	**78_Z-4-2-1**	**78_Z-4-2-3**	**78_Z-4-3-4**	**78_Z-4-3-5**	**78_Z-4-4-4**	**78_Z-4-4-5**
Item no.	**22544451**	**22544471**	**22544461**	**22544413**	**22641667**	**22544433**	**22641677**
green	**78_Z-5-1-1**	**78_Z-5-2-1**	**78_Z-5-2-3**	**78_Z-5-3-4**	**78_Z-5-3-5**	**78_Z-5-4-4**	**78_Z-5-4-5**
Item no.	**22544452**	**22544472**	**22544462**	**22544412**	**22641668**	**22544432**	**22641678**
blue	**78_Z-6-1-1**	**78_Z-6-2-1**	**78_Z-6-2-3**	**78_Z-6-3-4**	**78_Z-6-3-5**	**78_Z-6-4-4**	**78_Z-6-4-5**
Item no.	**22544453**	**22544473**	**22544463**	**22544411**	**22641669**	**22544431**	**22641679**
violet	**78_Z-7-1-1**	**78_Z-7-2-1**	**78_Z-7-2-3**	**78_Z-7-3-4**	**78_Z-7-3-5**	**78_Z-7-4-4**	**78_Z-7-4-5**
Item no.	**22544454**	**22544474**	**22544464**	**22544410**	**22641670**	**22544430**	**22641680**
grey	**78_Z-8-1-1**	**78_Z-8-2-1**	**78_Z-8-2-3**	**78_Z-8-3-4**	**78_Z-8-3-5**	**78_Z-8-4-4**	**78_Z-8-4-5**
Item no.	**22544455**	**22544475**	**22544465**	**22544409**	**22641671**	**22544429**	**22641681**
white	**78_Z-9-1-1**	**78_Z-9-2-1**	**78_Z-9-2-3**	**78_Z-9-3-4**	**78_Z-9-3-5**	**78_Z-9-4-4**	**78_Z-9-4-5**
Item no.	**22544456**	**22544476**	**22544466**	**22544508**	**22641672**	**22544428**	**22641682**
length	20 mm/*.79 in.*	20 mm/*.79 in.*	20 mm/*.79 in.*	38 mm/*1.5 in.*	38 mm/*1.5 in.*	38 mm/*1.5 in.*	38 mm/*1.5 in.*
Assembly Tool	74_Z-0-2-1	74_Z-0-2-1	74_Z-0-2-1	74_Z-0-3-6	74_Z-0-3-6	74_Z-0-4-6	74_Z-0-4-6
Item no.	**22543144**	**22543144**	**22543144**	**22544544**	**22544544**	**22544543**	**22544543**

* without RG 302

Cable groups see page 28 Assembly tools see page 385 Mounting holes see page 412

The two types below are available in black only

Cable group	U29, U30, U34	U32, U36
example	RG 213/U	RG 214/U
colour black	**78_Z-0-7-1**	**78_Z-0-7-2**
Item no.	**22641162**	**22641163**
length	48 mm / *1.89 in.*	48 mm / *1.89 in.*
Assembly tool	*74_Z-0-7-2*	*74_Z-0-7-3*
Item no.	**22641165**	**22641164**

COLOURED PLASTIC CAPS

H+S type	Item no.	Packaging	Colour
61_BNC-0-0-7 /—_-H	**22543863**	bulk 100 pcs.	black
61_BNC-1-0-7/—_-H	**22543864**	bulk 100 pcs.	brown
61_BNC-2-0-7/—_-H	**22543865**	bulk 100 pcs.	red
61_BNC-3-0-7/—_-H	**22543866**	bulk 100 pcs.	orange
61_BNC-4-0-7/—_-H	**22543867**	bulk 100 pcs.	yellow
61_BNC-5-0-7/—_-H	**22543868**	bulk 100 pcs.	green
61_BNC-6-0-7/—_-H	**22543869**	bulk 100 pcs.	blue
61_BNC-7-0-7/—_-H	**22543870**	bulk 100 pcs.	violet
61_BNC-8-0-7/—_-H	**22543871**	bulk 100 pcs.	grey
61_BNC-9-0-7/—_-H	**22543872**	bulk 100 pcs.	white

Suitable for all HUBER+SUHNER® BNC plugs (can be pressed on to collar in front of coupling nut)

FASTENING SCREWS

for panel receptacles (pattern 13, 15, 23, 25)

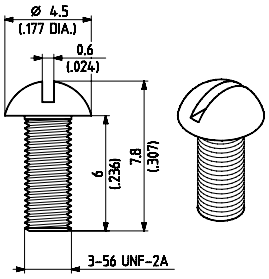

Fig. 1

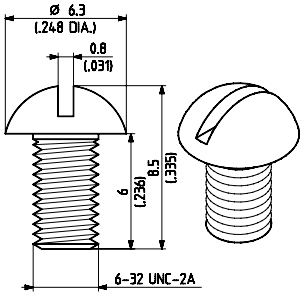

Fig. 2

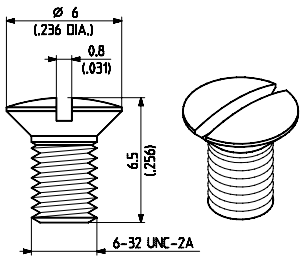

Fig. 3

H+S type	Item no.	Packaging	Thread	Fig.
73_Z-0-0-2/—_3H	**22543044**	bulk 100 pcs.	3-56 UNF	1
73_Z-0-0-6/—_0H	**22543050**	bulk 100 pcs.	6-32 UNC	2
73_Z-0-0-7/—_3H	**22543052**	bulk 100 pcs.	6-32 UNC	3

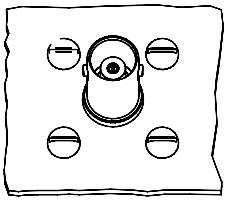

Cable groups see page 28 | Assembly tools see page 385 | Mounting holes see page 412

INSULATING WASHERS

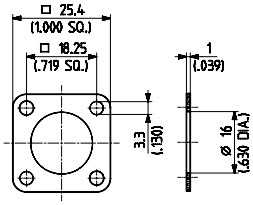

Fig. 1

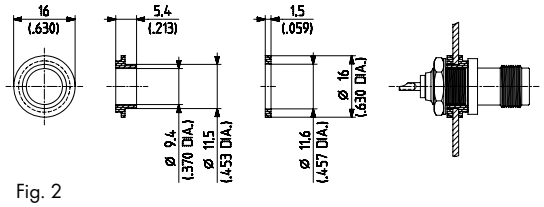

Fig. 2

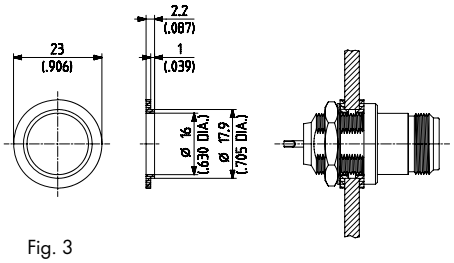

Fig. 3

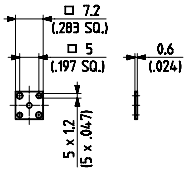

Fig. 4

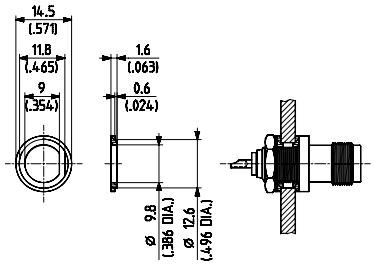

Fig. 5

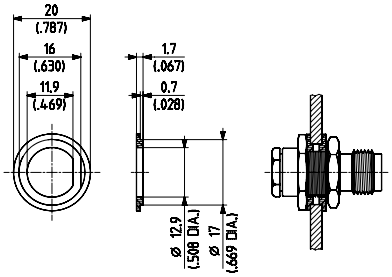

Fig. 6

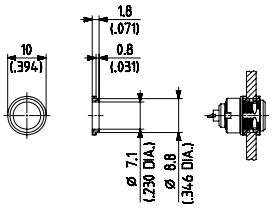

Fig. 7

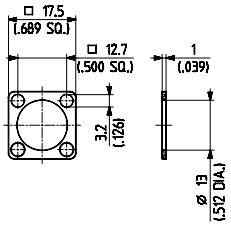

Fig. 8

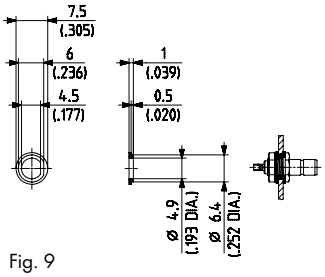

Fig. 9

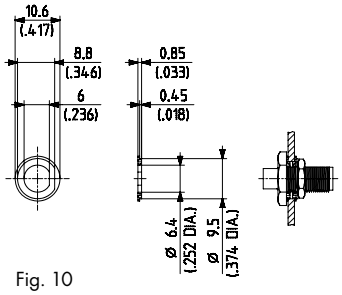

Fig. 10

H+S type	Item no.	Suitable for: Connector pattern*	Connector series	Mounting hole	Material	Fig.	Notes
77_Z-0-0-1/—_-H	**22543199**	23, 25	N	ML 14	polyamide	1	10 pcs each
77_Z-0-0-2/—_-H	**22543200**	12, 22	BNC, TNC	ML 102	polyamide	2	**/10 pairs
77_Z-0-0-4/—_-Z	**22543202**	12,22,24,34	N	ML 113	polyamide	3	10 pairs
77_Z-0-0-8/—_-H	**22543204**	82, 85	SMB/C/S, MCX, QLA 00, SMA	ML 41	PTFE	4	100 pcs
77_Z-0-0-9/—_-Z	**22543205**	12, 22	BNC, TNC	ML 4	polycarbonate	5	**/10 pairs
77_Z-0-0-12/—_-H	**22543209**	24, 34	BNC, TNC	ML 22	polycarbonate	6	10 pairs
77_Z-0-0-14/—_-Z	**22543211**	22, 24, 34	QLA 00	ML 114	polyamide	7	**/10 pairs
77_Z-0-0-15/—_-H	**22641429**	23, 25	BNC, TNC	ML 8	polyethylene	8	10 pcs each
77_Z-0-0-21/—_-Z	**22645782**	22, 24, 34	SMB/C/S	ML 35	polycarbonate	9	10 pairs
77_Z-0-0-23/—_-Z	**22652083**	22, 34***	SMA	ML 2	polycarbonate	10	for connectors with ML 35 only / 10 pairs

* see connector pattern on page 5
** without rotation protection
*** not all types of pattern 34 are suitable for insulated mounting

Cable groups see page 28 Assembly tools see page 385 Mounting holes see page 412

SOLDER TAGS

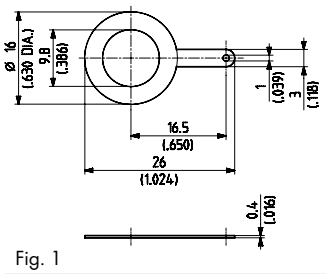

Fig. 1

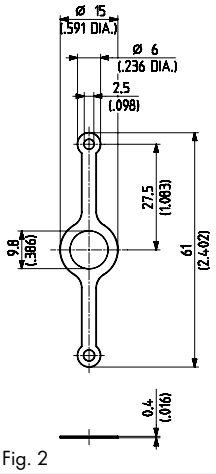

Fig. 2

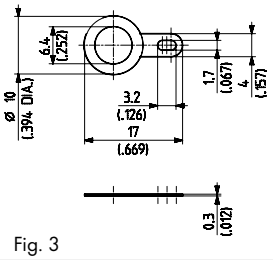

Fig. 3

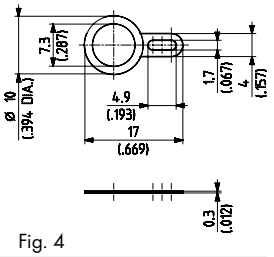

Fig. 4

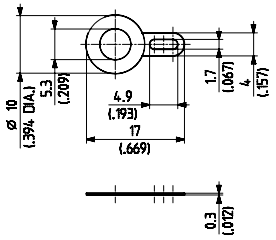

Fig. 5

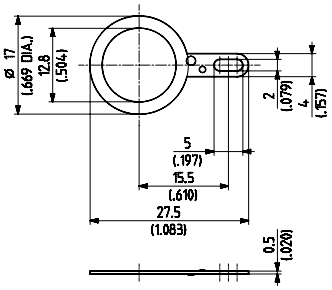

Fig. 6

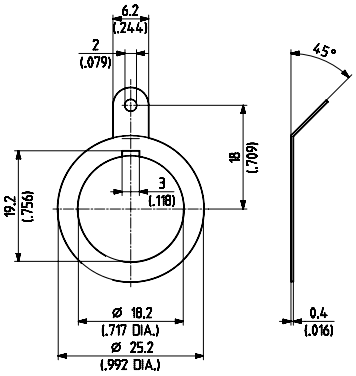

Fig. 7

H+S type	Item no.	Suitable for: Connector pattern*	Connector series	Packaging	Fig.	Notes
72_Z-0-0-1/—_5H	**22543029**	12, 22	BNC, BNO, BNT, SHV, MHV, TNC	bulk 100 pcs.	1	single ended
72_Z-0-0-2/—_-H	**22543033**	12, 22	BNC, BNO, BNT, SHV, MHV, TNC	bulk 100 pcs.	2	double ended
72_Z-0-0-6/—_0H	**22543036**	22, 24, 34	SMA	bulk 100 pcs.	3	single ended
72_Z-0-0-8/—_5H	**22543038**	22, 24	QLA 00	bulk 100 pcs.	4	single ended
72_Z-0-0-9/—_5H	**22543039**	12, 22, 24, 34	SMB/SMC/SMS, MCX	bulk 100 pcs.	5	single ended
72_Z-0-0-11/—_5H	**22641496**	24, 34	BNC, BNO, BNT, SHV, MHV, TNC	bulk 100 pcs.	6	single ended
72_Z-0-0-13/—_5H	**22642507**	22, 24, 34	N	bulk 100 pcs.	7	single ended

* see connector pattern on page 5

Cable groups see page 28 Assembly tools see page 385 Mounting holes see page 412

COMPONENT CONTAINER "SUCOBOX"

The HUBER+SUHNER "SUCOBOX" is a versatile component container with coaxial input and output connectors or cable entries.

SUCOBOX I

The basic element consists of two similar container parts, two soldering plates for easy soldering of the earthing and 8 tightening screws.

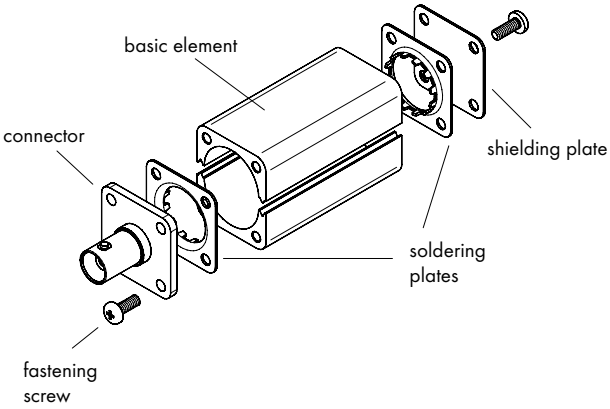

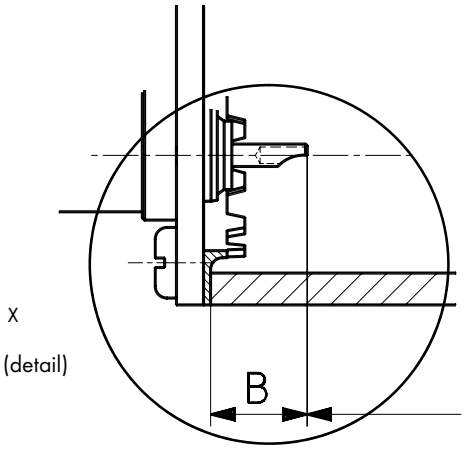

B = distance between pin end and soldering plate

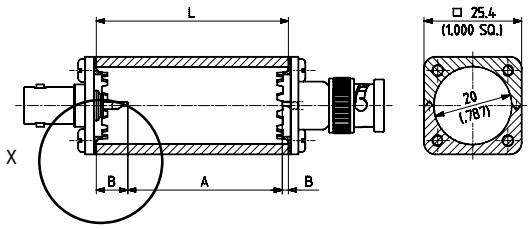

H+S type	Item no.	Description	Length L	Material	Packaging
66_CB-35-0-1/—_-E	**22541510**	basic element	35.0 mm / *1.38 in.*	aluminium, anodized, blue	single
66_CB-50-0-1/—_-E	**22541514**	basic element	50.0 mm / *1.97 in.*	aluminium, anodized, blue	single
72_Z-0-0-5/—_OH	**22543035**	soldering plate, separate	–	brass, silver plated	bulk 100 pcs.
73_Z-0-0-9/—_-H	**22543056**	shielding plate, separate	–	brass, silver plated	bulk 100 pcs.

Suitable connectors

H+S type	Item no.	Connector	Dimension B (see drawing top left)	Packaging
13_BNC-50-0-2/133_NE	**22540160**	plug	1.5 mm / *0.06 in.*	single
23_BNC-50-0-2/133_NE	**22540333**	jack	8.0 mm / *0.31 in.*	single
13_N-50-0-1/133_NE	**22542173**	plug	9.0 mm / *0.35 in.*	single
23_N-50-0-1/133_NE	**22542272**	jack	9.0 mm / *0.35 in.*	single

Cable groups see page 28 Assembly tools see page 385 Mounting holes see page 412

ACCESSORIES FOR SK CONNECTORS

lass bead for 12 SK, 13 SK, 22 SK, 23 SK
unchers (package with 1 piece)

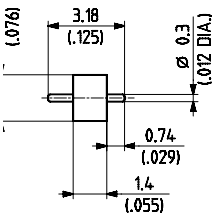

HUBER+SUHNER® TYPE
73_Z-0-0-203
Item no. 22645983

Microstrip stress relief contacts
(package with 100 pieces)

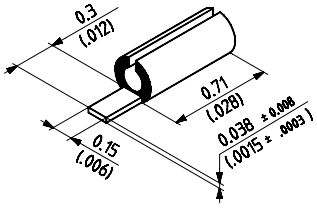

HUBER+SUHNER® TYPE
73_Z-0-0-204
Item no. 22645980
Mounting instruction 9183

ACCESSORIES FOR BMA CONNECTORS

Glass bead for 12_BMA-50-0-3
and 22_BMA-50-0-3

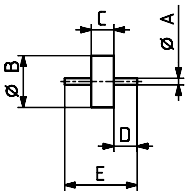

H+S type	Item no.	Ø A	Ø B	C	D	E
73_Z-0-0-198	**22645655**	0.5 mm / *.020 in.*	4.0 mm / *.157 in.*	1.75 mm / *.069 in.*	1.8 mm / *.071 in.*	5.6 mm / *.220 in.*

ACCESSORIES FOR HUBER+SUHNER QUICK-FIT®

Cold shrink tubes for additional protection

H+S type	Item no.	Packaging	Application of connector pair		
73_Z-0-0-337/— -Z	**22658883**	bulk 10 pcs.	3/8″ - 1/2″ 1/2″HF - 1/2″ HF	3/8″ EFX - 1/2″ 1/2″HF - 1/2″	1/2″ - 1/2″
73_Z-0-0-338/— -Z	**22658884**	bulk 10 pcs.	1/2″HF - 7/8″ 7/8″ - 7/8″	1/2″ - 7/8″	
73_Z-0-0-339/— -Y	**22658885**	bulk (variable)	1/2″HF - $1^1/_4$″ 1/2″HF - $1^5/_8$″ 1/2″ - $1^1/_4$″ 1/2″ - $1^5/_8$″ 7/8″ - $1^1/_4$″ 7/8″ - $1^5/_8$″		
73_Z-0-0-340/— -Y	**22658886**	bulk (variable)	$1^1/_4$″ - $1^1/_4$″ $1^1/_4$″ - $1^5/_8$″ $1^5/_8$″ - $1^5/_8$″		

Cable groups see page 28 Assembly tools see page 385 Mounting holes see page 412

MOUNTING HOLES, PCB LAYOUTS

DIMENSIONS OF MOUNTING HOLES (ML)

ML 1

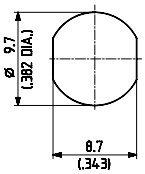

ML 2

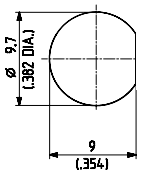

ML 3

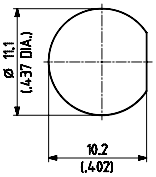

ML 4

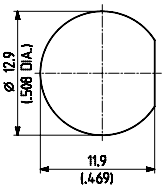

ML 5

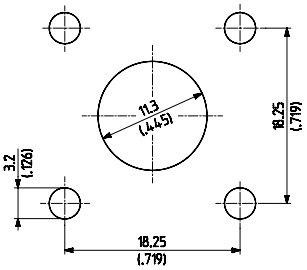

rear panel mounting

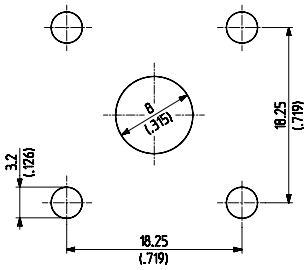

front panel mounting

ML 6

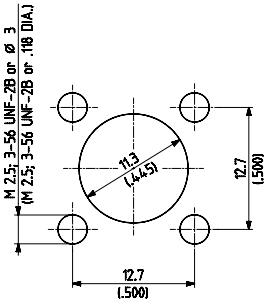

rear panel mounting

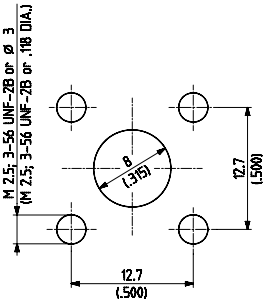

front panel mounting

ML 7

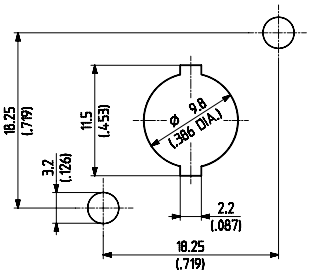

rear panel mounting

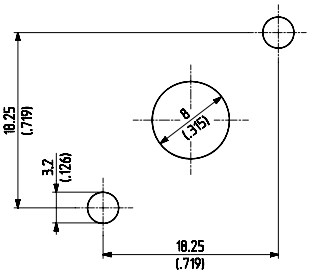

front panel mounting

ML 8

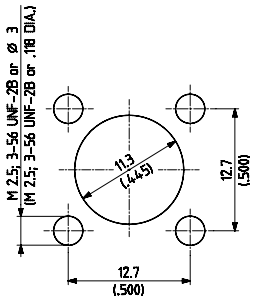

rear panel mounting

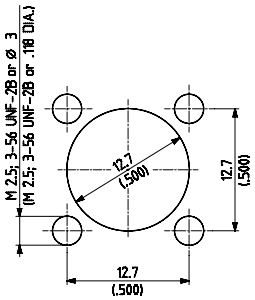

front panel mounting

ML 9

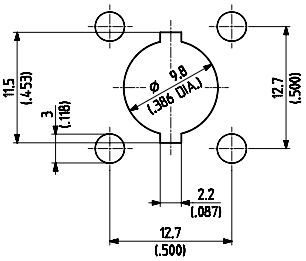

rear panel mounting

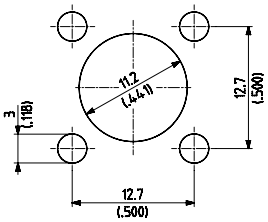

front panel mounting

ML 10

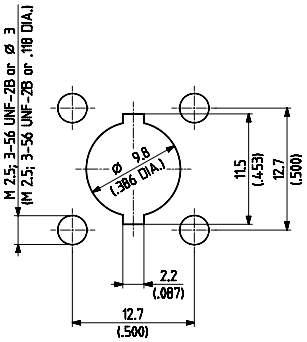

ML 11

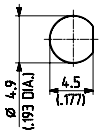

ML 12

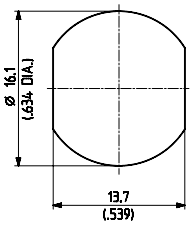

ML 13

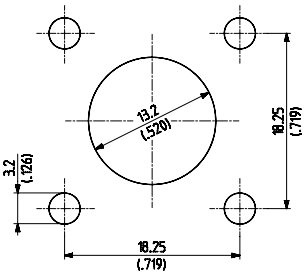

ML 14

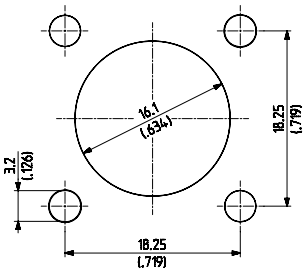

ML 15

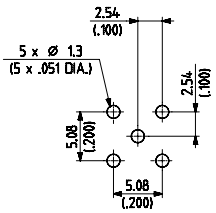

ML 16

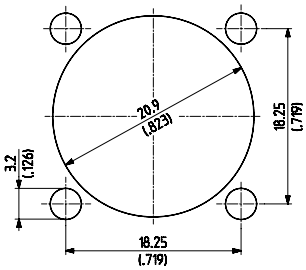

rear panel mounting

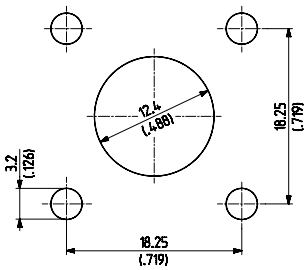

front panel mounting

ML 17

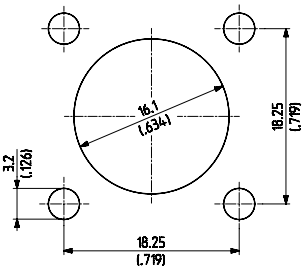

rear panel mounting

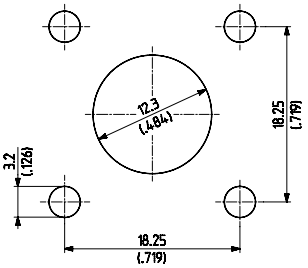

front panel mounting

ML 18

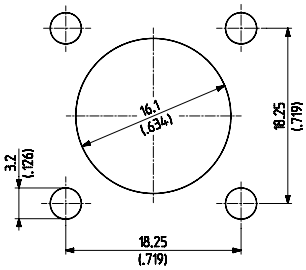

rear panel mounting

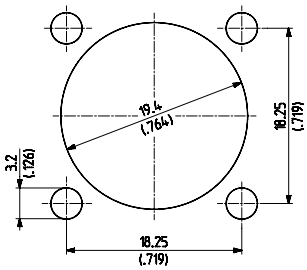

front panel mounting

ML 19

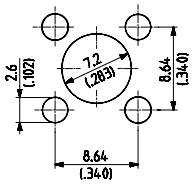

ML 20

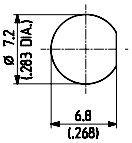

ML 21

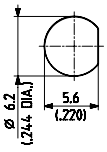

ML 22

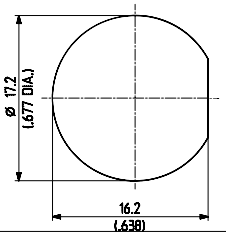

ML 23

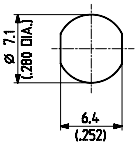

ML 24

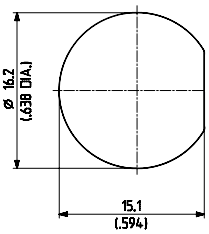

ML 25

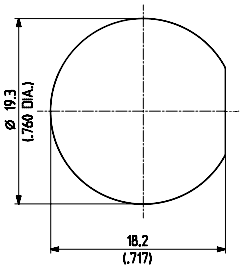

ML 26

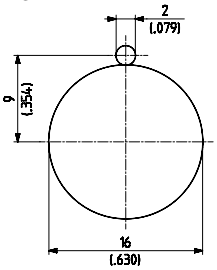

ML 27

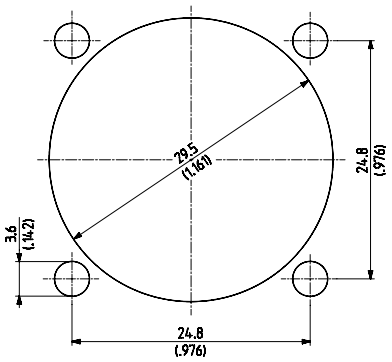

ML 28

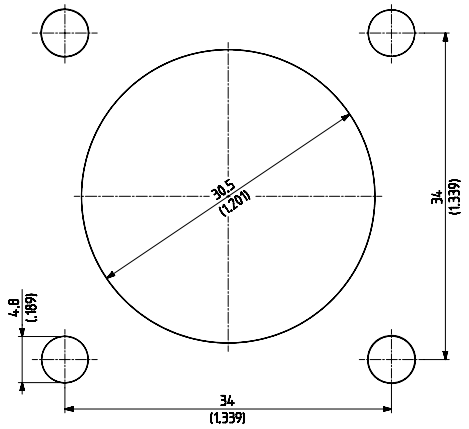

ML 29

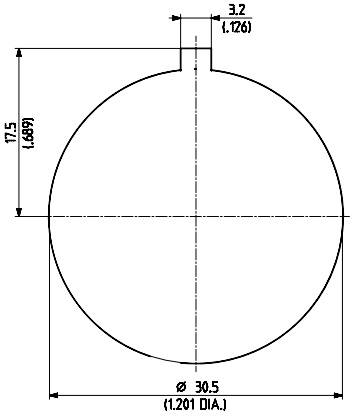

ML 30

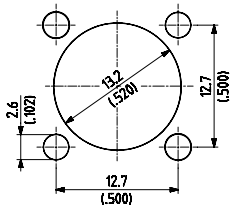

ML 31

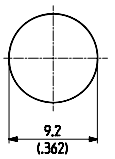

ML 32

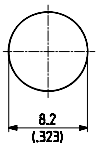

ML 33

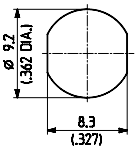

ML 34

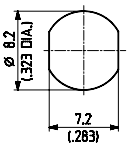

ML 35

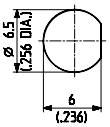

ML 36

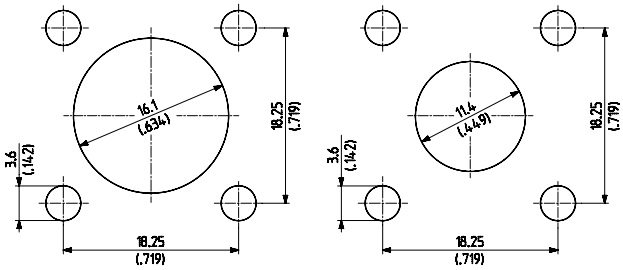

rear panel mounting

front panel mounting

ML 37

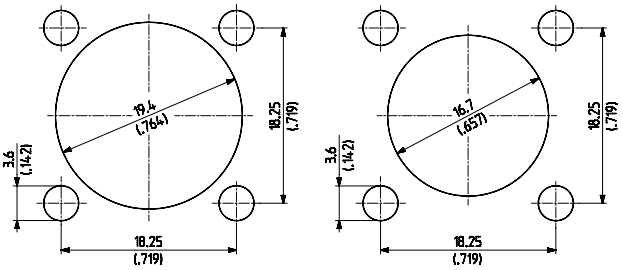

rear panel mounting

front panel mounting

ML 38

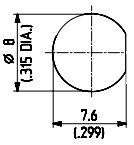

ML 39

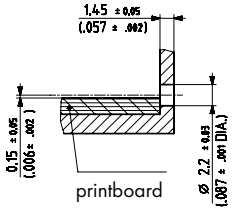

ML 40

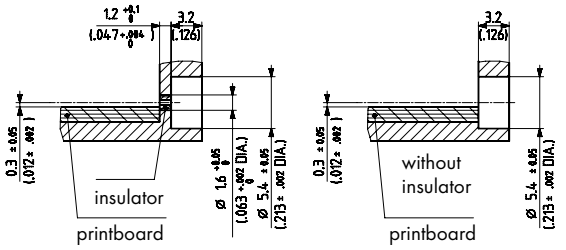

ML 41

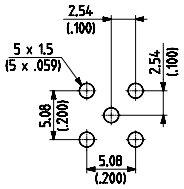

ML 42

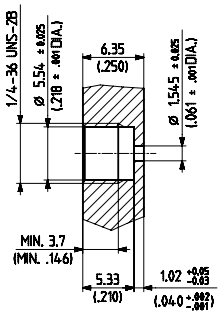

ML 43

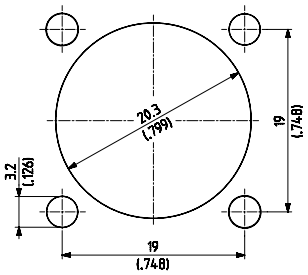

ML 44

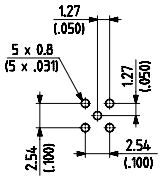

ML 45

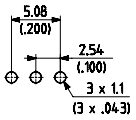

ML 46

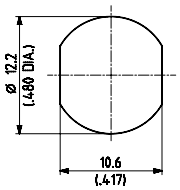

ML 47

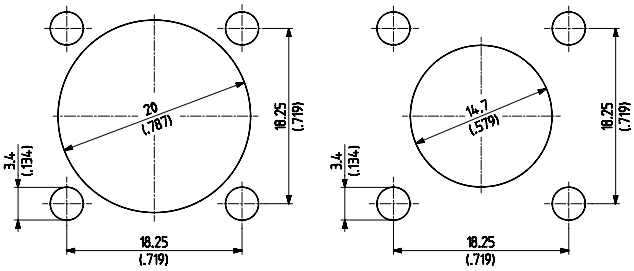

ML 48

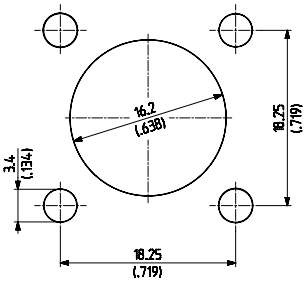

ML 49

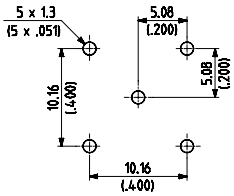

ML 50

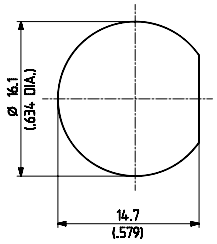

ML 51

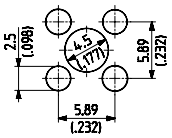

ML 52

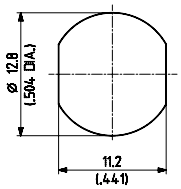

ML 53

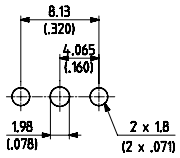

ML 54

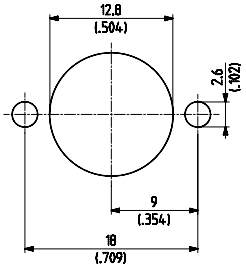

ML 55

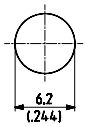

ML 56

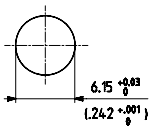

ML 57

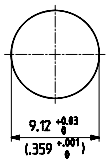

ML 58

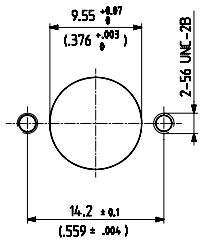

ML 59

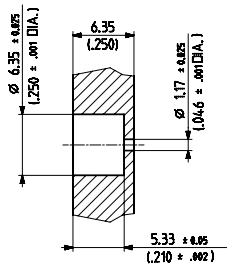

Ml 60

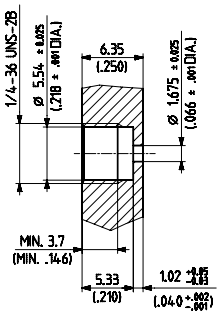

ML 61

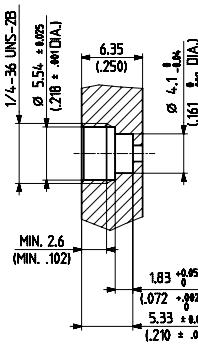

ML 62

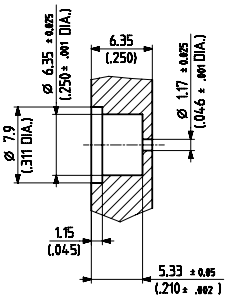

ML 63

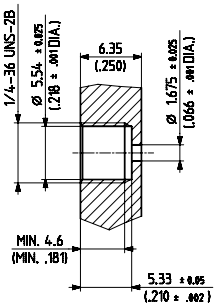

ML 64

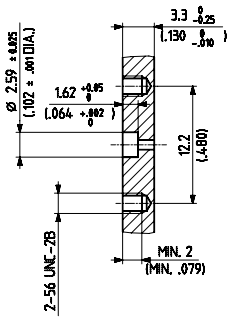

ML 65

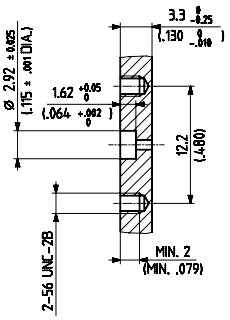

ML 66

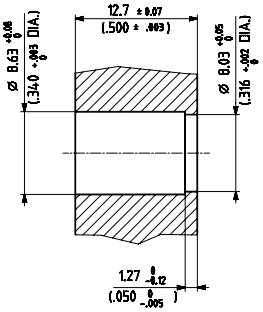

ML 67

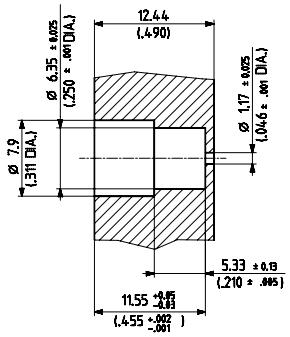

ML 68

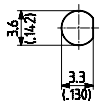

ML 69

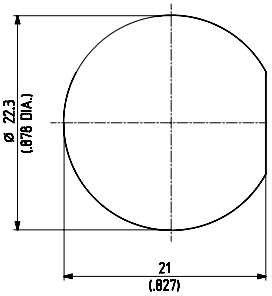

ML 70

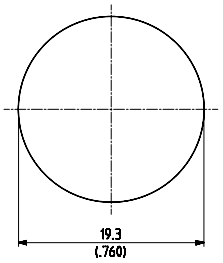

ML 71

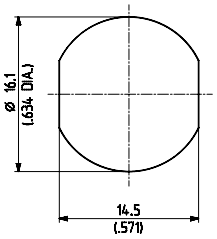

ML 72

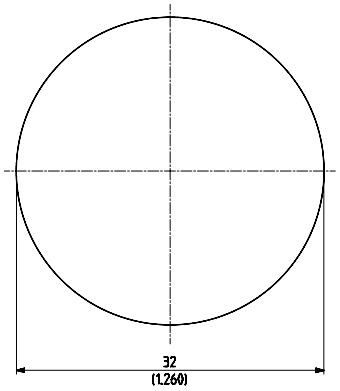

ML 73

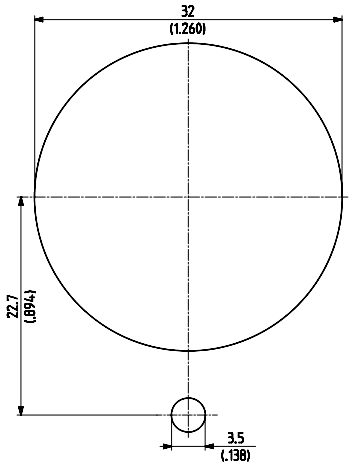

ML 74

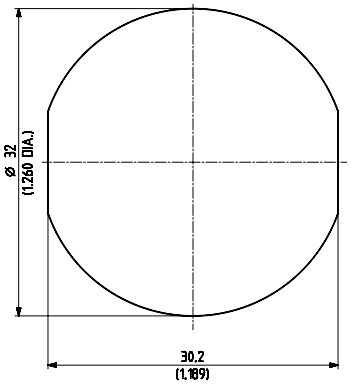

ML 75

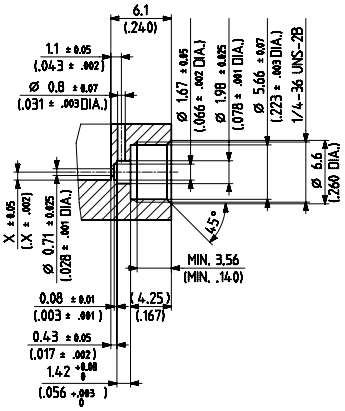

ML 76

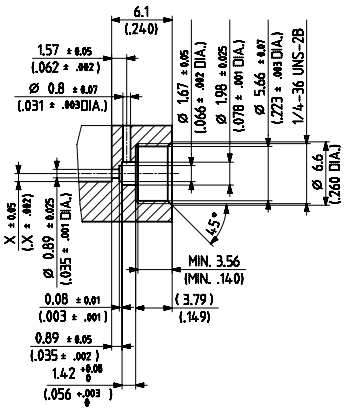

ML 77

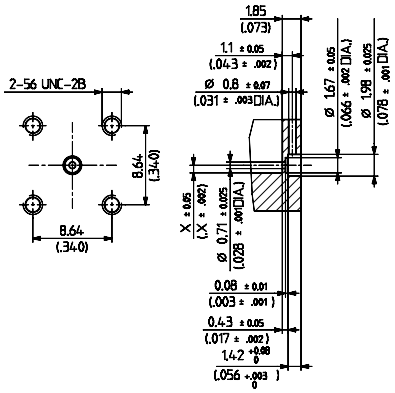

ML 78

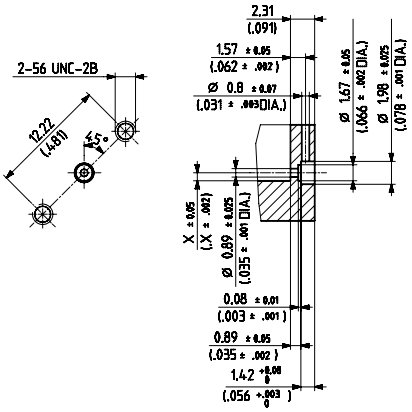

ML 79

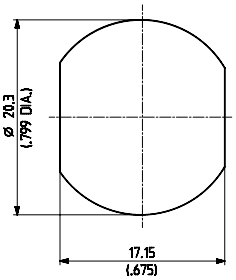

ML 80

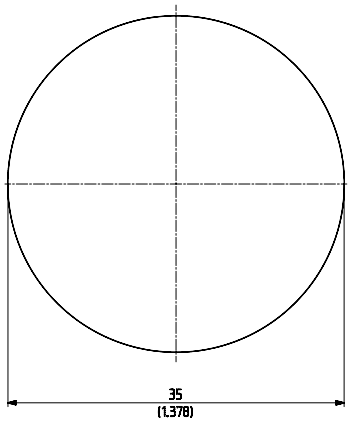

ML 81

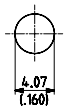

ML 82

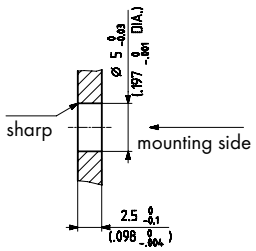

ML 83

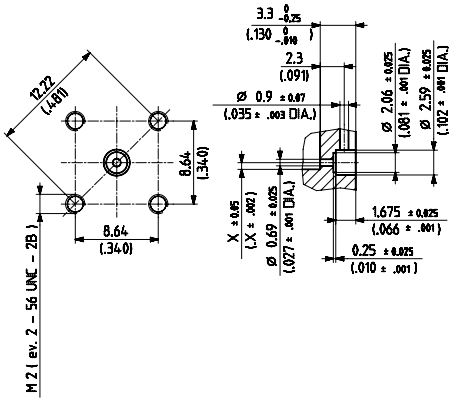

ML 84

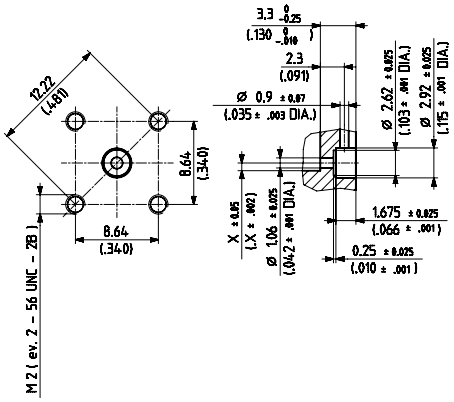

ML 85

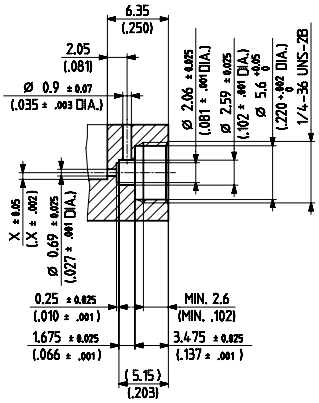

ML 86

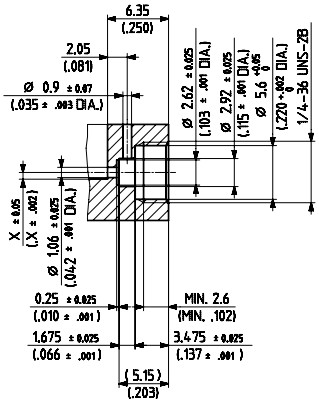

ML 87

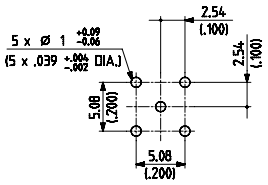

ML 88

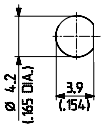

ML 89

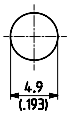

ML 90

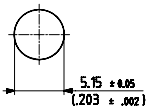

ML 91

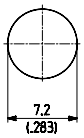

ML 92

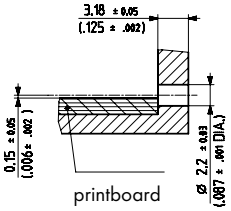

ML 93

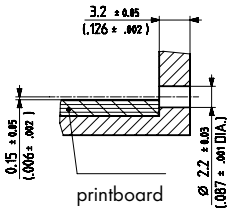

ML 94

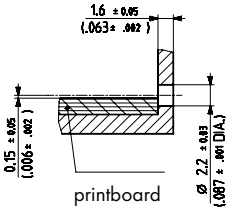

ML 95

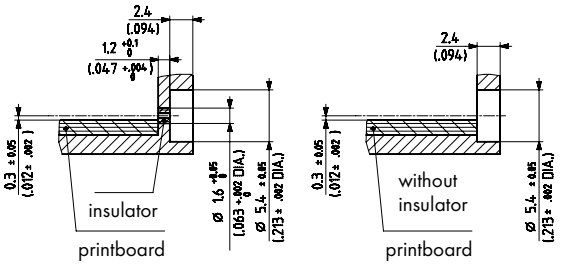

ML 96

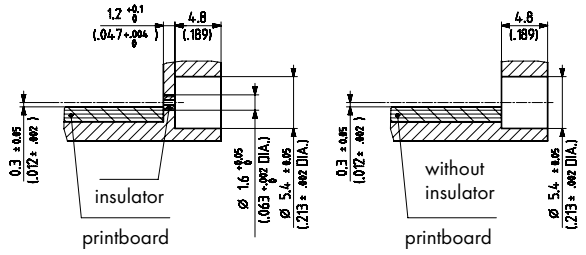

ML 97

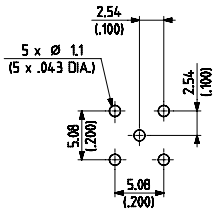

ML 98

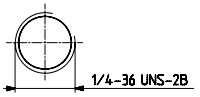

ML 99

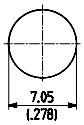

counter sunk from rear

ML 100

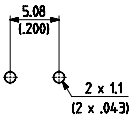

ML 101

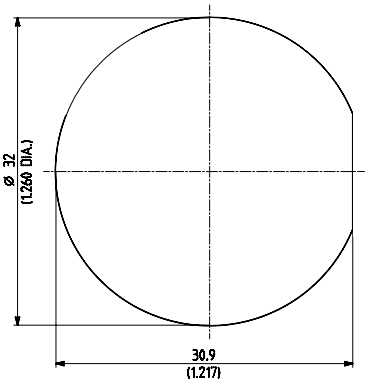

ML 102

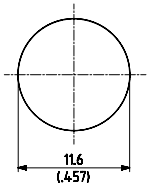

ML 103

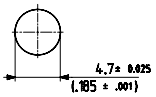

ML 104

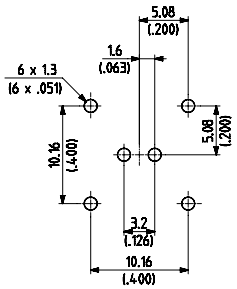

ML 105

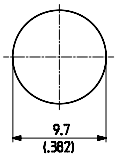

ML 106

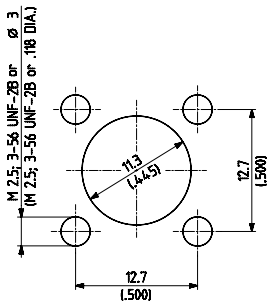

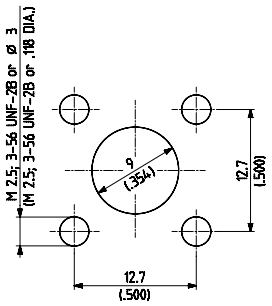

ML 107

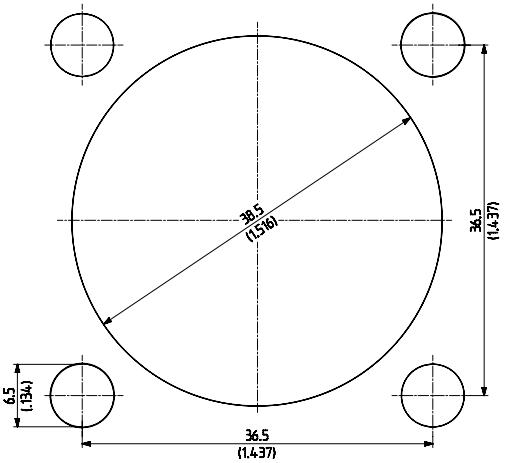

ML 108

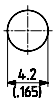

ML 109

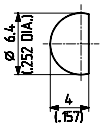

ML 110

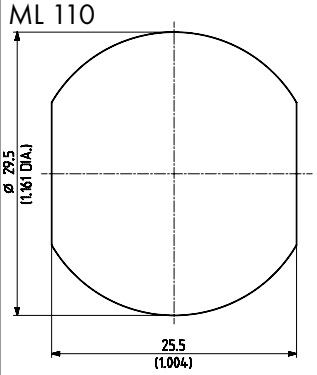

ML 111

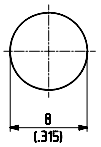

ML 112

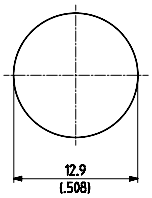

ML 113

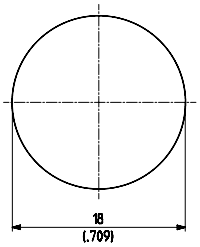

ML 114

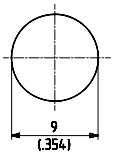

ML 115

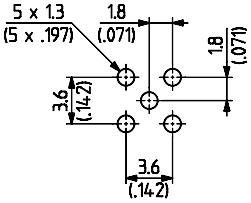

ML 118

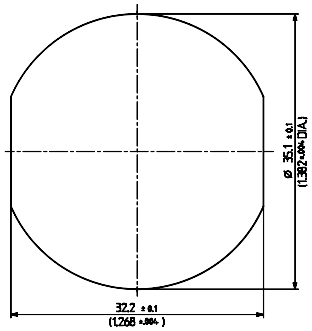

ML 119

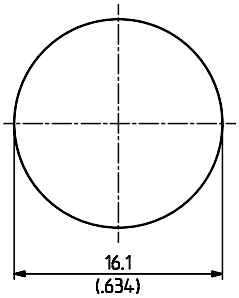

ML 128

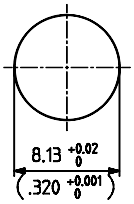

ML 143

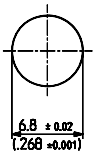

ML 146

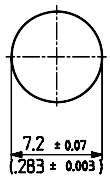

ML 164

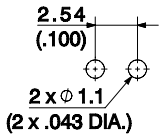

DIMENSIONS OF PCB LAYOUTS (ML)

ML 120

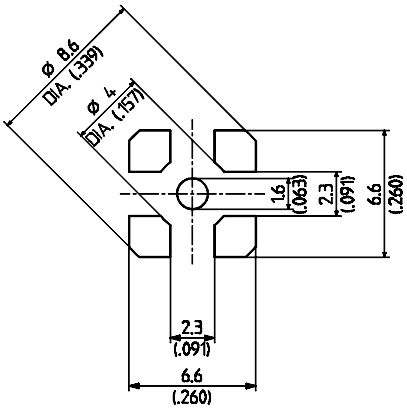

ML 121

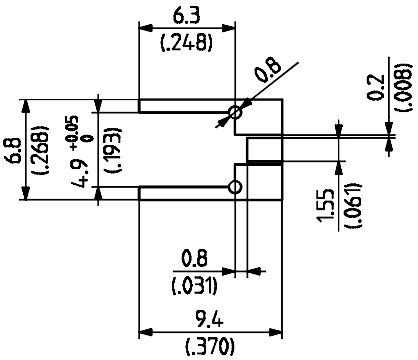

ML 122

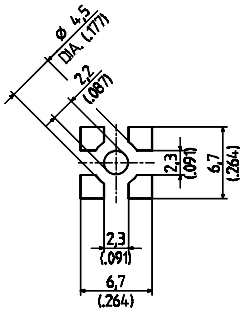

ML 123

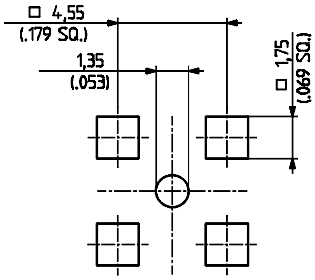

ML 126

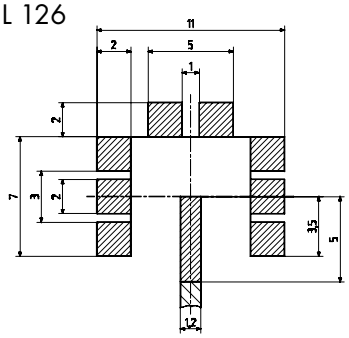

+ = Leiterzugmuster
pattern

= Lötfläche (frei von Lötstopplack)
lands (free of solder mask)

ML 130

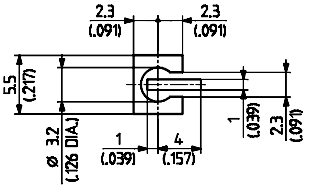

ML 131

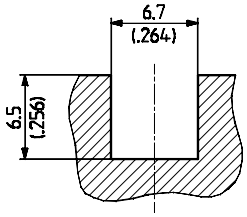

ML 132

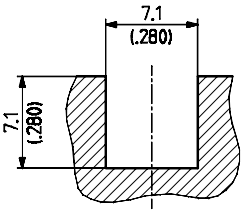

ML 134

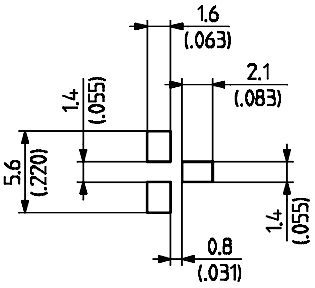

ML 135

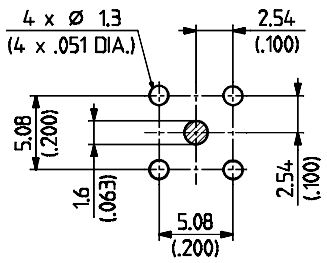

ML 136

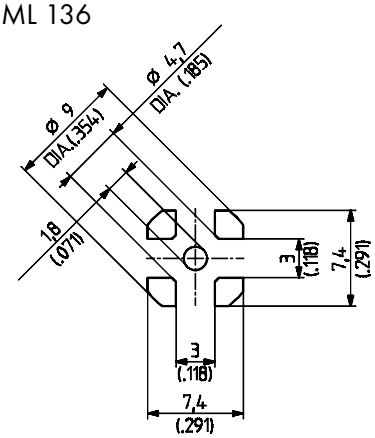

ML 137

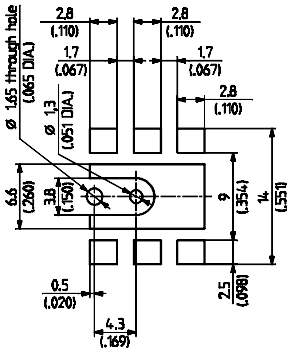

ML 138

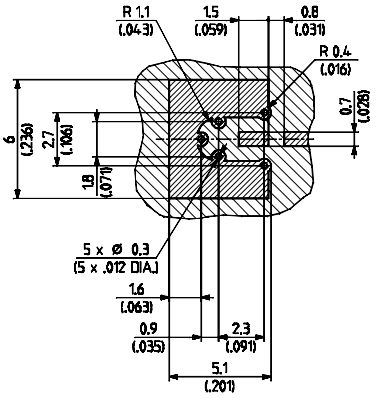

ML 147

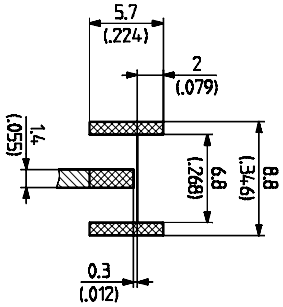

ML 167

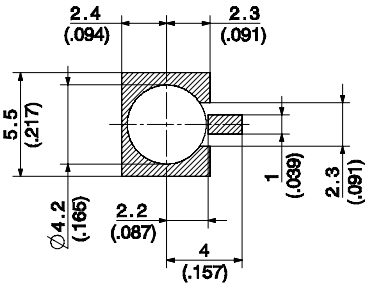

A FURTHER HUBER+SUHNER PRODUCT GROUP!

WiMAX and WIFI antennas for broadband wireless

Details on this product are to be found in the brochure,
Item no. 84006561. Get your copy
free of charge at **www.hubersuhner.com.**

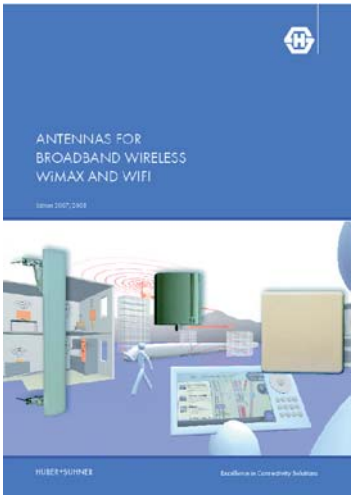

TYPE INDEX

Adaptors

Adaptors Within Series

Adaptors Between Series

Assembly Tools

BMA-Verbinder

N 50Ω-Connectors

N 75Ω-Connectors

PC 3.5-Connectors

QLA-Connectors

SMB-Connectors

SMC-Connectors

SMS-Connectors

TNC 50Ω-Connectors

TNC 75Ω-Connectors

HUBER+SUHNER – Excellence in Connectivity Solutions

HUBER+SUHNER is a leading global supplier of components and systems for electrical and optical connectivity in communications, industrial and transportation markets. HUBER+SUHNER can draw on core competences in the areas of high and low frequency technology, fibre optics and polymers. Working in close collaboration with our customers around the globe, we strive for excellence in the development and manufacturing of high quality products.

HUBER+SUHNER is certified according to ISO 9001 and ISO 14001.

HUBER+SUHNER
HUBER+SUHNER AG
RF Technology
CH-9100 Herisau
Phone +41 (0)71 353 41 11
Fax +41 (0)71 353 45 90
www.hubersuhner.com

644802/04.2007