CASE FINISH	CURRENT (AMPS)	WORKING VOLTAGE				MAXIMUM DC RESISTANCE (OHMS)	MAXIMUM VOLTAGE DROP		MINIMUM CAPACITANCE (uF)	MIN. INSERTION LOSS PER MIL-STD-220, FULL LOAD, +25°C												
		-55°C TO +85°C		-55°C TO +125°C																		
		AC	DC	AC	DC		DC	AC		14 KHz	30 KHz	50 KHz	75 KHz	100 KHz	150 KHz	300 KHz	500 KHz	1 MHz	10 MHz	100 MHz	1 GHz	10 GHz
TIN	15	--	80	--	50	0.005	.075	--	1.4	--	15	--	--	--	28	34	--	44	60	70	70	--

PART MARKING:
API
9051F-100-0000
DATE CODE

PACKAGE MARKING: 04

BUBBLE PACK
9051F-100-0000
DATE CODE
QTY: 50 PCS (MAX)

MARKING NOTES:

N/A

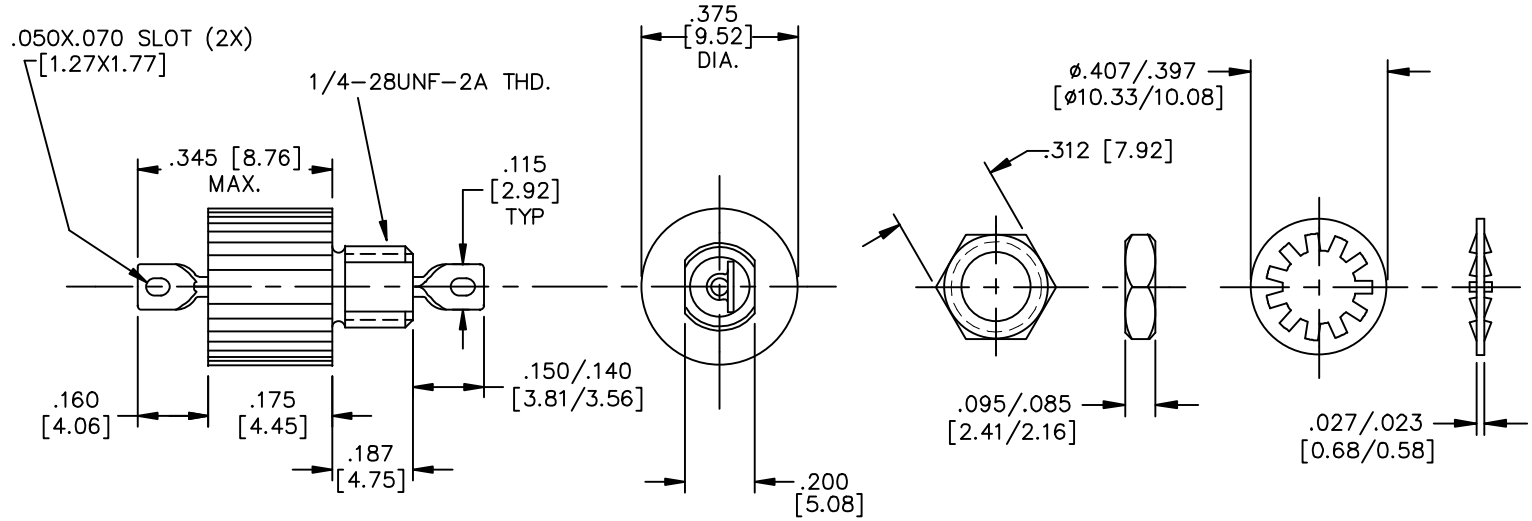

SCHEMATIC

MTG. HARDWARE

NOTES:
1) MOUNTING TORQUE NOT TO EXCEED 7in-lbs.
2) MAX. REFLOW IS 260°C FOR 5 SECONDS.

RoHS COMPLIANT

REV. N.D.	CHANGE NOTICE
04	CN #22429
03	CN #13820
02	CN 31316-CPD
01	CN 30539-CPD
00	CN 29078-CPD

UNLESS OTHERWISE SPECIFIED DIMENSIONS ARE IN INCHES[mm]. DO NOT SCALE.

THIRD ANGLE PROJECTION

TOLERANCES UNLESS OTHERWISE SPECIFIED
Fractions ±
Dec. .xx±
Dec. .xxx± .010
Angles ±0° 30'

CODE IDENT. NO. OLSP2

api technologies corp.
FAIRVIEW PENNSYLVANIA

Dwn. KAUFFMAN
Date 10-20-16
ENGR McALEVY
Sheet 1 of 1

Description Low Pass EMI Filter

9051F-100-0000

Quality Products From The Specialists In Electro-Magnetic Compatibility